B. WEINBERGER.

MACHINE FOR UNFOLDING AND ROLLING CLOTH.

APPLICATION FILED JAN. 13, 1917.

1,261,877. Patented Apr. 9, 1918.

Fig. 1.

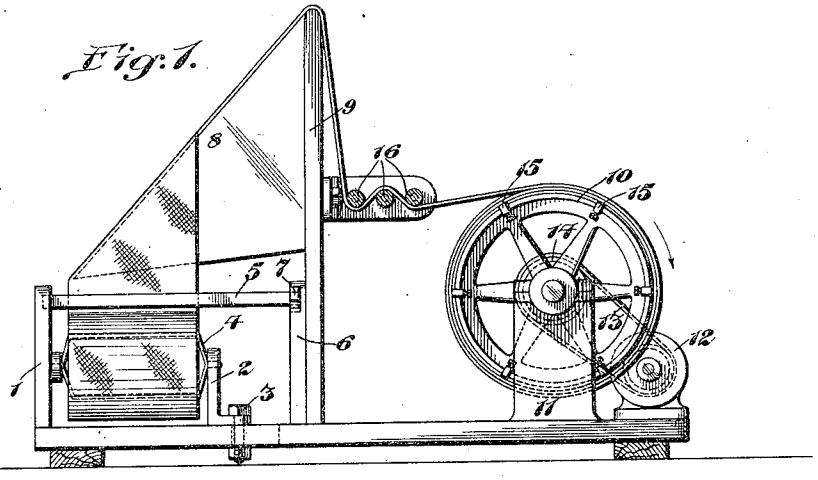

Fig. 2.

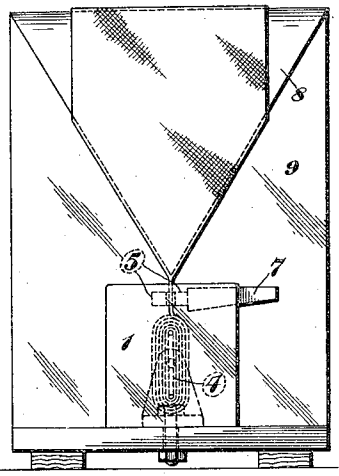

Fig. 6.

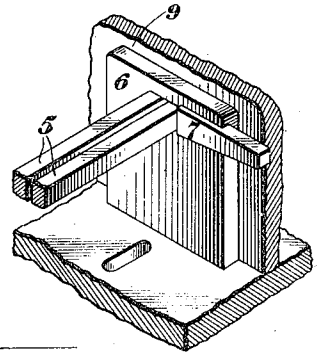

Fig. 3.

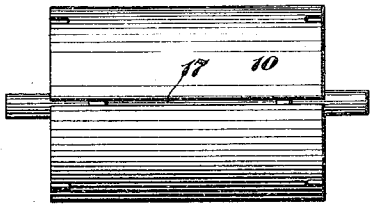

Fig. 4.

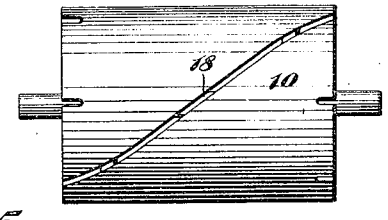

Fig. 5.

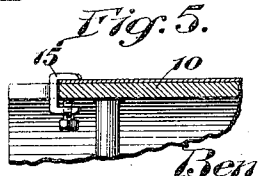

Attest.
Charles A. Becker.

Inventor:
Benjamin Weinberger;
by Rippey & Kingsland,
His Attorneys.

UNITED STATES PATENT OFFICE.

BENJAMIN WEINBERGER, OF ST. LOUIS, MISSOURI, ASSIGNOR TO MARX & HAAS CLOTHING CO., OF ST. LOUIS, MISSOURI, A CORPORATION.

MACHINE FOR UNFOLDING AND ROLLING CLOTH.

1,261,877. Specification of Letters Patent. Patented Apr. 9, 1918.

Application filed January 13, 1917. Serial No. 142,317.

To all whom it may concern:

Be it known that I, BENJAMIN WEINBERGER, a citizen of the United States, residing at the city of St. Louis and State of Missouri, have invented a new and useful Machine for Unfolding and Rolling Cloth, of which the following is a specification.

This invention relates to machines for unfolding and rolling cloth.

At the present time various kinds of cloth are folded longitudinally and rolled or reeled upon boards to provide the bolts, in which form the cloth is distributed to the dealers and to garment manufacturers.

My invention relates to mechanism for unfolding the cloth as it is removed from the bolt and rolling the cloth upon a roll to enable the cloth to be cut into proper lengths rapidly and with facility.

The object of the invention is to provide a machine of the character mentioned, comprising a revoluble support for the roll or bolt of cloth, in combination with a roll adapted to have one end of the cloth connected thereto, mechanism for revolving the roll, a triangular element between the roll and the bolt of cloth over which the cloth is drawn and unfolded as it passes toward the roll, and tensioning devices for the cloth between the roll and the unfolding device.

In the accompanying drawings, in which a preferred embodiment of the invention is illustrated,

Figure 1 is an end elevation of the machine.

Fig. 2 is a side elevation looking toward the unfolding device.

Fig. 3 is a view illustrating a longitudinal guiding slot in the roll for guiding the knife when the cloth is cut in lengths.

Fig. 4 is a similar view illustrating an oblique guiding slot in the roll for guiding the knife in cutting the cloth obliquely.

Fig. 5 is a detailed view illustrating a clamp which may be employed for connecting one of the ends of the cloth to the roll.

Fig. 6 is a perspective view illustrating in detail a part of the guide for the cloth as the cloth passes toward the unfolding device.

The machine illustrated comprises a frame composed of a stationary upright 1 and an adjustable upright 2 movable toward and away from the upright 1. The upright 2 may be held in connection with the supporting base by a clamping bolt 3 passing through an angular extension of the upright 2 and through a slot in the supporting base. The uprights 1 and 2 constitute supports for upholding the bolt of cloth which is to be unfolded and rolled.

The device for upholding the bolt of cloth includes preferably a metallic frame 4 which may be constructed of small rods or spring wire as shown and provided with extensions adapted to seat in bearings in the uprights 1 and 2, as will be understood by reference to Fig. 1. The frame 4 may be easily inserted in the bolt of cloth by first removing therefrom the usual board upon which the cloth is wound, and inserting the frame 4 in the space previously occupied by the board. After the bolt of cloth has thus been placed upon the frame 4, the latter may be mounted in the bearings in the uprights 1 and 2 and the free end of the cloth passed upwardly between guides below the unfolding device. The guides for the cloth comprise two members 5. One end of each of the members 5 is supported by the upright 1 and the opposite ends thereof are mounted in a support 6 in which they are retained in spaced relation by a removable key 7 seating in the slot in which the members 5 extend.

By reference to Fig. 1, it will be observed that the support 6 is spaced from the upright 2, thus permitting the latter to be moved to different adjustments as required to accommodate and support bolts of cloth of different widths.

The unfolding device includes a triangular guide 8 secured to a supporting frame 9 and extending obliquely downwardly therefrom toward the guides 5, so that as the cloth is drawn between the guides one fold of the cloth will pass at one side of the guide 8 and the other fold of the cloth will pass at the opposite side of the guide 8. The obliquity of the sides of the guide 8 unfolds the cloth, as the same is drawn over the horizontal upper edge of the guide.

The device for actuating the cloth includes a roll 10 revolubly supported by upright standards 11 and rotated by any appropriate mechanism. For convenience, I have illustrated a motor 12 driving a belt 13 passing over a pulley 14 in connection with the roll 10. The end of the cloth which is drawn over the upper horizontal edge of the guide 8 is secured in connection with the roll 10 by releasable clamps 15, so that as

the roll is turned the cloth will be wound thereon.

In order to prevent buckling of the cloth, I provide a series of tensioning guiding rods 16 supported between the roll 10 and the unfolding guide 8, and between which the end of the cloth is passed before it is connected to the roll. As the roll revolves the cloth will be drawn between the rods 16 thus holding the cloth straight and maintaining it at proper tension.

In order to permit the cloth to be cut transversely while on the roll and to constitute a guide for the knife or cutting implement, the roll is formed with a longitudinal slot or groove 17. As the knife is drawn transversely of the cloth it will be guided in a straight line by having one end thereof operating within the slot or groove. In order to permit the cloth to be cut obliquely into measured lengths while on the roll, I provide an oblique slot 18 which will also serve as a guide for the knife.

Since the roll 10 is quite large and the cloth is wound closely thereon, the variation in the length of the layers of cloth is so very slight that it is immaterial. In practice, therefore, the roll is utilized to place the cloth in layers and since they are so nearly of uniform length they are in fact used as measured layers.

From the foregoing description, it will be readily understood that the bolt is placed within the supporting frame with the fold of the cloth directly below the extremity of the triangular guide 8 and that the end of the cloth is passed over the horizontal upper edge of the guide and thence between the rods 19 and to the roll, to which the cloth is connected. Rotation of the roll in the direction of the arrow in Fig. 1 will wind the cloth thereon, while the devices between the roll and the bolt of cloth serve first to unfold the cloth, and then to give it the proper tension preparatory to being cut into measured lengths as determined by the slots in the roll, or otherwise.

It will be apparent that many of the elements of the machine may be varied and modified without departure from the scope of the invention. Therefore, I do not confine myself to specific details or features of construction and arrangement, but what I claim and desire to secure by Letters Patent is:—

1. A machine of the character described, comprising a revoluble support for the bolt of folded cloth, guiding elements between which the cloth passes when unwound from the bolt, a triangular unfolding guide having one corner thereof extending obliquely from the guiding elements and arranged to extend between the folds of the cloth when the cloth is drawn from said guiding elements, an actuating roll, and means for revolving the actuating roll to draw the cloth from the bolt against the unfolding guide and to wind the cloth upon the roll.

2. A machine of the character described, comprising a support for supporting the bolt of folded cloth for horizontal rotation, a horizontal roll supported at right angles to the plane in which the bolt of cloth is supported for unwinding the cloth from the bolt, power driven mechanism for actuating the roll to wind the cloth thereon as the cloth is unwound from the bolt, a device above the support for the bolt of cloth for spreading apart the folds of the cloth drawn from the bolt, and tensioning devices between said last-named device and said roll.

3. A machine of the character described, comprising a horizontal revoluble frame for supporting a bolt of folded cloth, a horizontal roll supported at right angles to the plane in which the bolt of cloth is supported adapted to have one end of the cloth connected thereto, mechanism for actuating said roll to wind the cloth thereon and to unwind the bolt, a triangular guide above the horizontal frame adapted to extend between the folds of cloth passing from the bolt to the roll, and means intermediate the roll and said guide for tensioning and holding the cloth straight.

4. In a machine of the character described, the combination of a frame adapted to be placed within the bolt of folded cloth, supports for supporting said frame, a triangular device supported above said frame and adapted to extend between the folds of the cloth to unfold and spread the same, a guide in alinement with said device between said device and the frame supporting the bolt for guiding the cloth to said device, a roll supported in a horizontal position at right angles to said frame operable to wind cloth thereon, and a member between said triangular device and said roll having a horizontal edge over which the cloth is drawn by the roll.

5. In a machine of the character described, the combination of a frame for supporting the bolt of folded cloth, elements for revolubly supporting said frame, a triangular device adapted to extend between the folds of the cloth to unfold and spread apart the folded cloth drawn thereover, a guide for guiding the cloth to said device, a horizontal support for supporting the cloth drawn from said unfolding device, a measuring device operable to place the unfolded cloth in layers of nearly the same measured lengths, mechanism for operating said measuring device, and a tensioning device between said measuring device and said horizontal support for tensioning and holding the cloth straight.

6. In a machine for unfolding and measuring cloth, the combination of supports

for supporting bolts of folded cloth of different widths, means for holding one of said supports in different adjustments relative to the other, a triangular device adapted to extend between the folds of the cloth to unfold the same, a measuring device for placing the unfolded cloth in layers of nearly the same measured lengths and for drawing the cloth from said supports, and tensioning devices between said measuring device and said triangular device for tensioning and holding the cloth straight.

7. In a machine of the character described, a frame adapted to support a bolt of folded cloth, a triangular device adapted to extend between the folds of the cloth and to unfold the cloth as it is drawn thereover, guides between said frame and said device for guiding the cloth so that the fold thereof will be at the apex of the triangular device, a measuring device for placing the cloth in layers of nearly the same measured lengths, means for connecting the cloth to the measuring device, and means for actuating the measuring device to place the cloth thereon.

8. A machine of the character described, comprising a support for the bolt of folded cloth, a triangular unfolding device adapted to extend between the folds of the cloth and unfold the same as the cloth is drawn thereover, a measuring device adapted to have the cloth placed thereon in layers of nearly the same measured lengths, means for connecting the cloth to said measuring device, means for actuating said measuring device to wind the cloth thereon, tensioning devices for tensioning and holding the cloth straight as it passes to the measuring device, and means in connection with the measuring device for indicating measured lengths of the cloth while the cloth is thereon.

9. In a machine of the character described, the combination of a support for the bolt of folded cloth, a measuring device adapted to have the cloth placed thereon in layers of nearly the same measured lengths, means for connecting the cloth to the measuring device, means for actuating the measuring device to place the cloth thereon, means between said support and the measuring device for unfolding and for tensioning the cloth passing to the measuring device, and means for indicating measured lengths of cloth of different shapes while the cloth is on the measuring device.

In witness whereof, I have signed this specification.

BENJAMIN WEINBERGER.

Copies of this patent may be obtained for five cents each, by addressing the "Commissioner of Patents, Washington, D. C."