June 5, 1945. R. N. TOONE ET AL 2,377,729

KNITTING AND KNITTING MACHINE

Filed Aug. 14, 1943 6 Sheets-Sheet 1

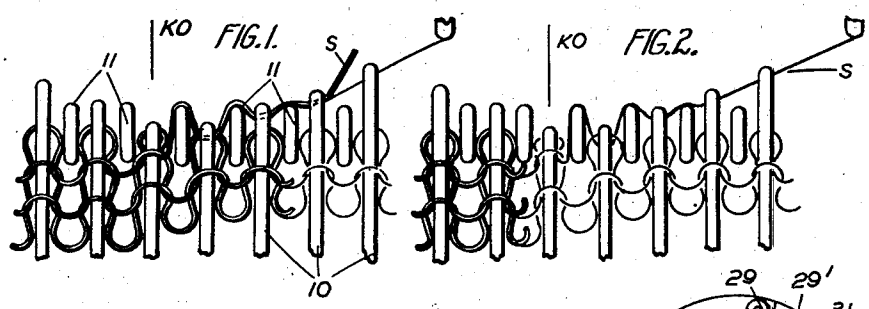

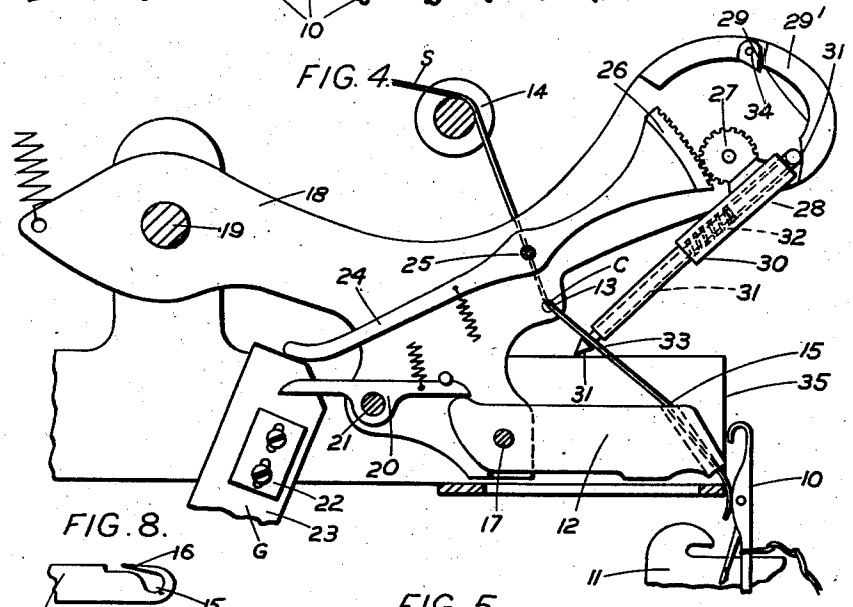

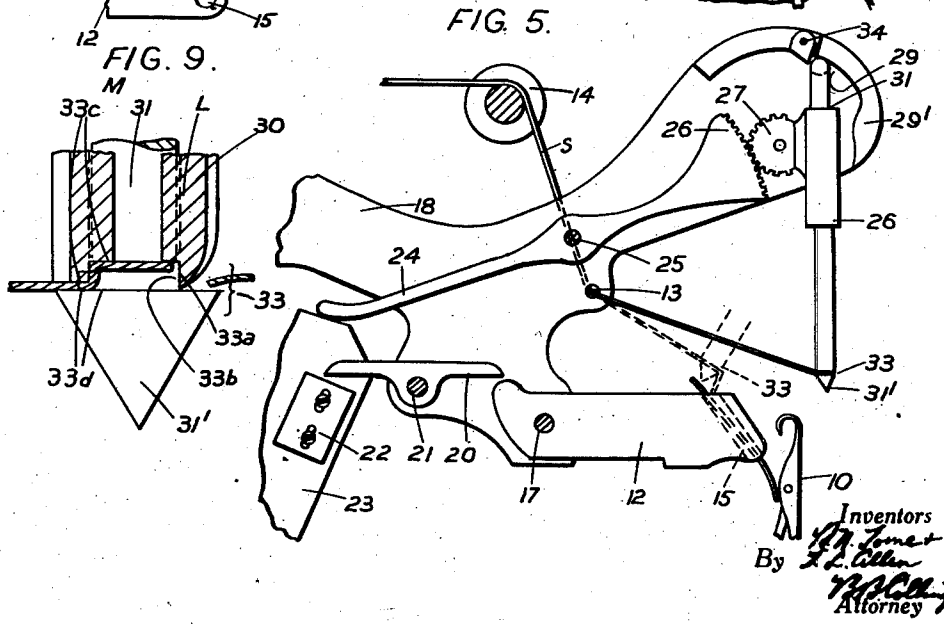

Inventors
By
Attorney

June 5, 1945. R. N. TOONE ET AL 2,377,729

KNITTING AND KNITTING MACHINE

Filed Aug. 14, 1943 6 Sheets-Sheet 2

FIG. 6.

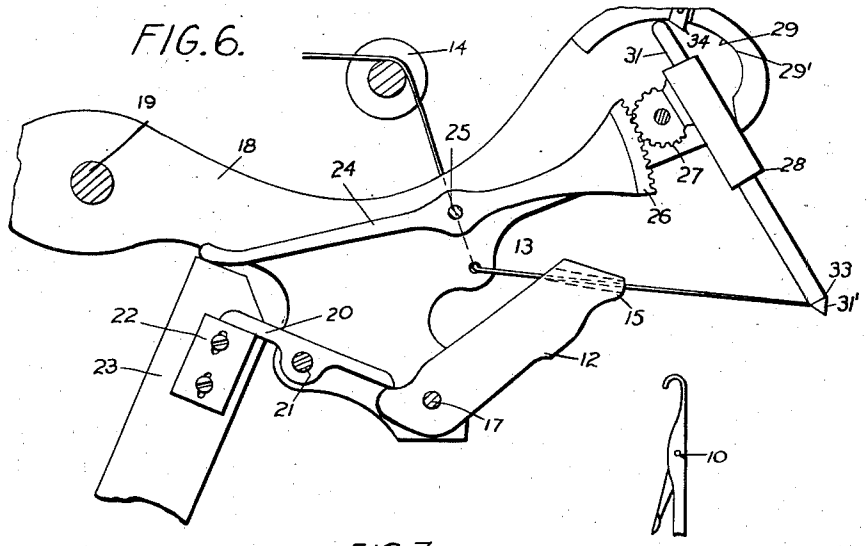

FIG. 7.

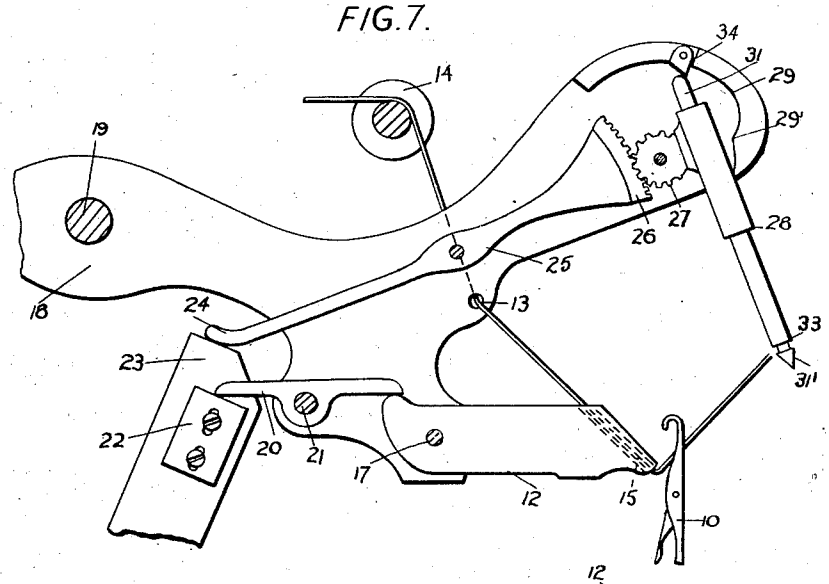

FIG. 3.

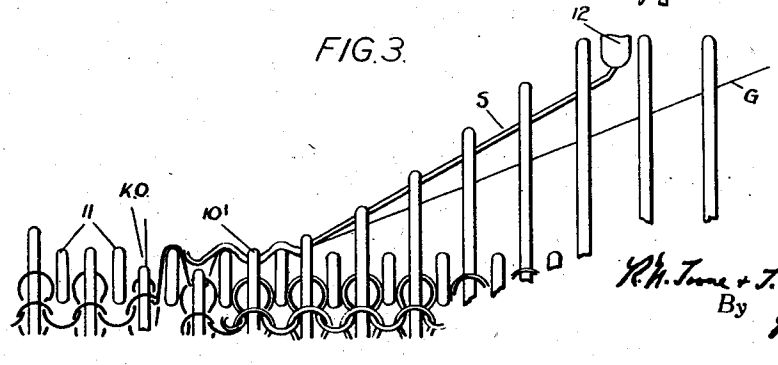

Inventors
R. N. Toone & T. L. Allen,
By
B. B. Collings
Attorney

June 5, 1945. R. N. TOONE ET AL 2,377,729

KNITTING AND KNITTING MACHINE

Filed Aug. 14, 1943 6 Sheets-Sheet 3

FIG. 10.

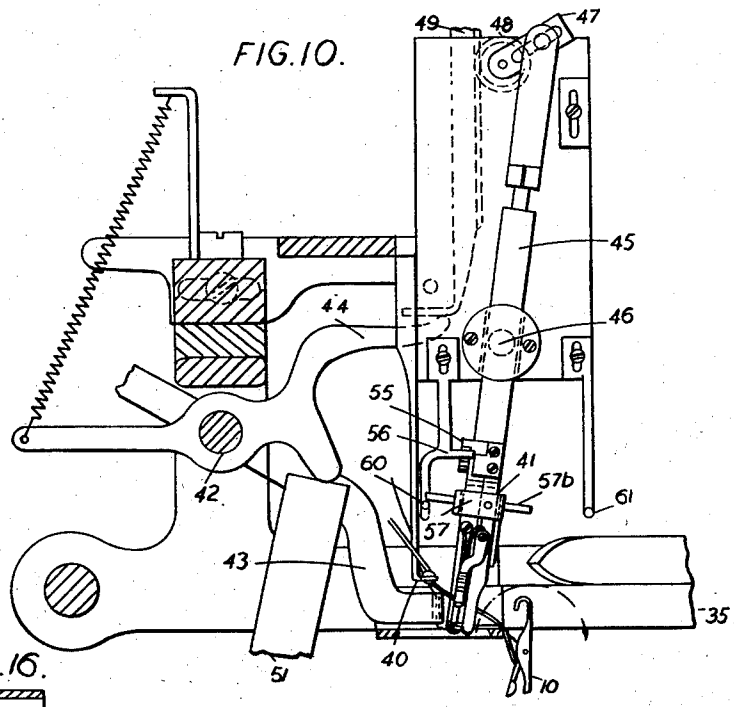

FIG. 16.

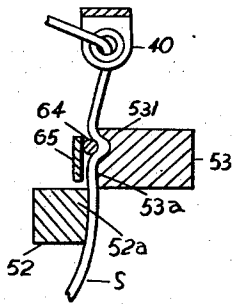

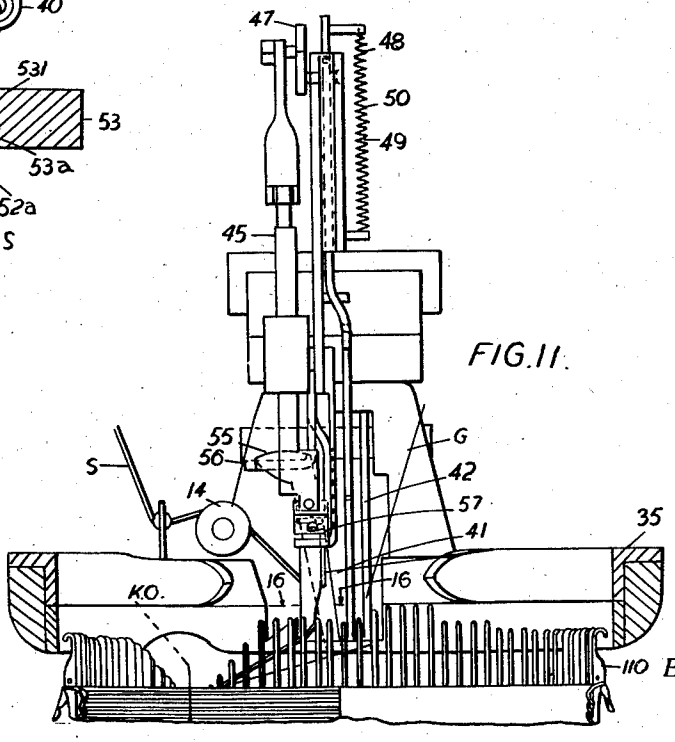

FIG. 11.

Inventors
R. N. Toone &
T. L. Allen
By W. P. Collings
Attorney

June 5, 1945. R. N. TOONE ET AL 2,377,729

KNITTING AND KNITTING MACHINE

Filed Aug. 14, 1943 6 Sheets-Sheet 4

FIG. 12.

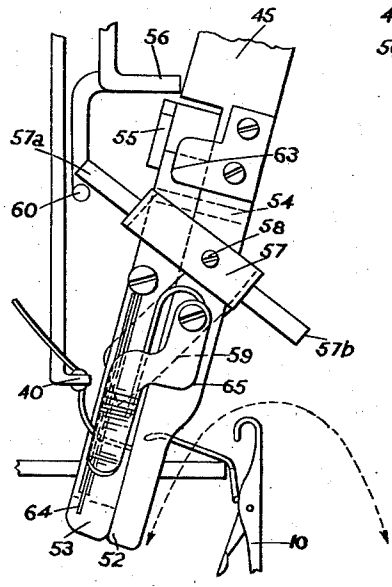

FIG. 13.

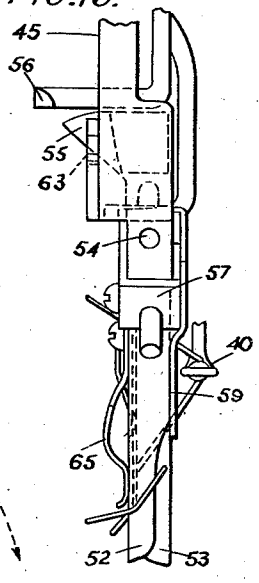

FIG. 17

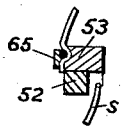

FIG. 18.

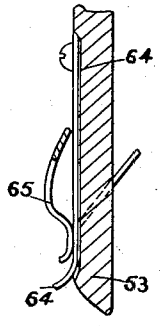

FIG. 14.

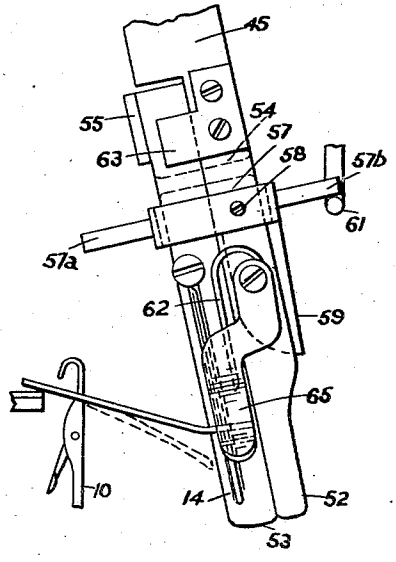

FIG. 15.

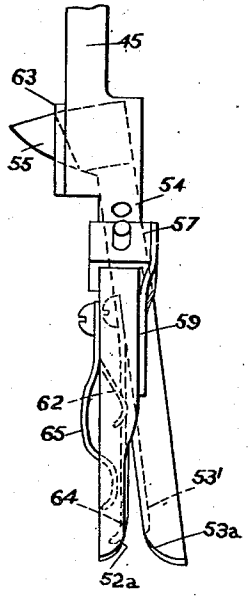

R. N. Toone & T. L. Allen, Inventors

By B. B. Collings

Attorney

June 5, 1945. R. N. TOONE ET AL 2,377,729

KNITTING AND KNITTING MACHINE

Filed Aug. 14, 1943 6 Sheets-Sheet 5

FIG. 19.

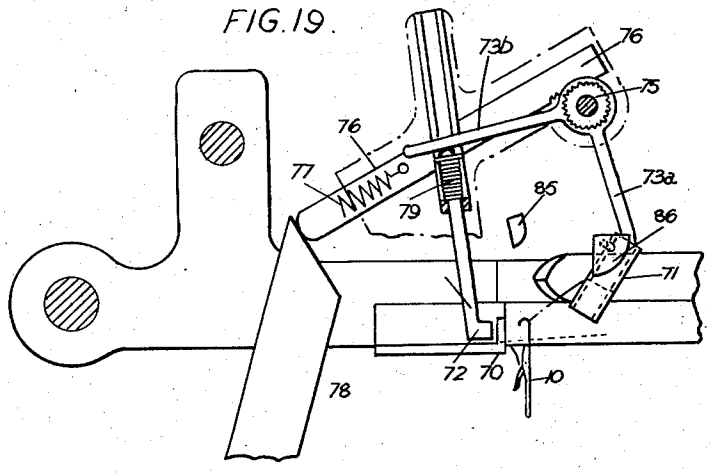

FIG 20

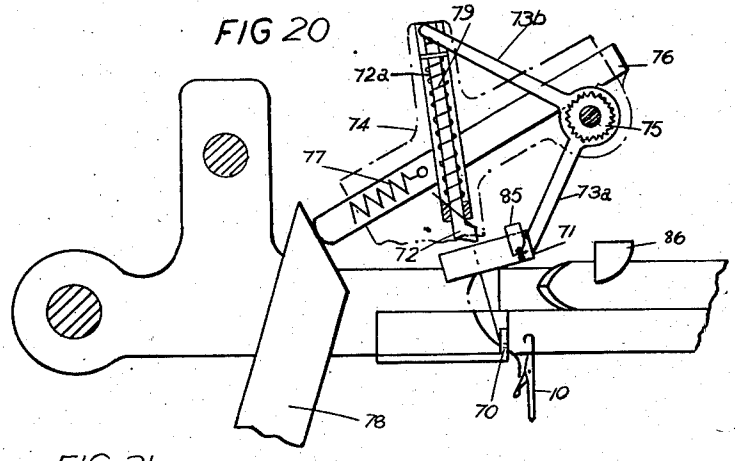

FIG. 21.

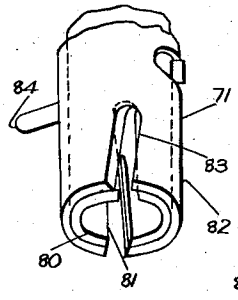

FIG. 22.

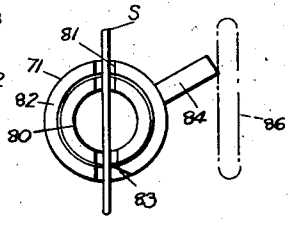

FIG. 23.

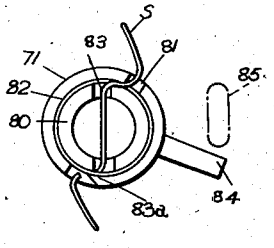

R. N. Toone + T. L. Collings Inventors

By W. B. Collings Attorney

June 5, 1945. R. N. TOONE ET AL 2,377,729

KNITTING AND KNITTING MACHINE

Filed Aug. 14, 1943 6 Sheets-Sheet 6

FIG.24.

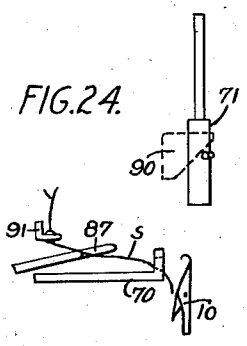

FIG.25

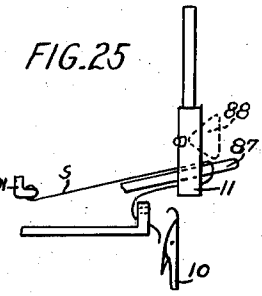

FIG.28.

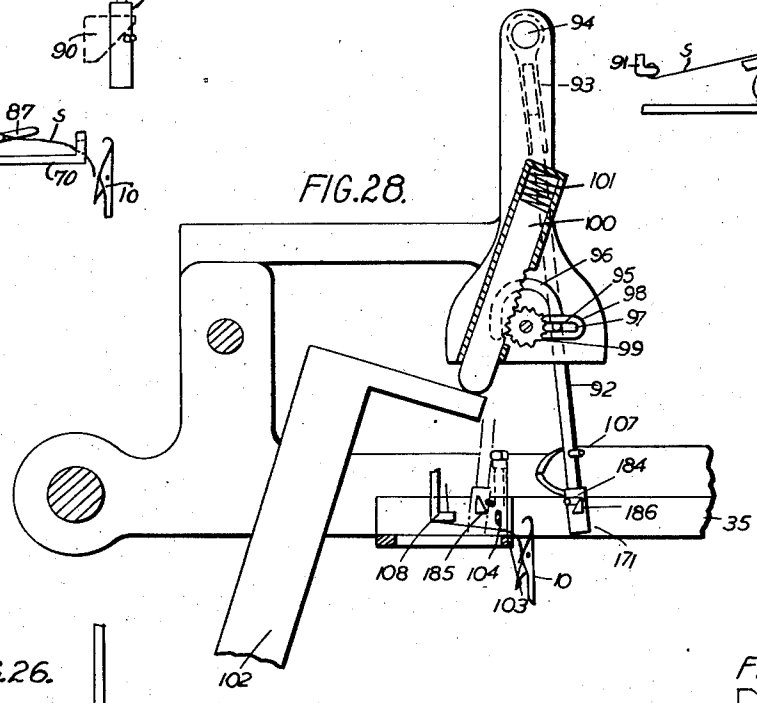

FIG.26.

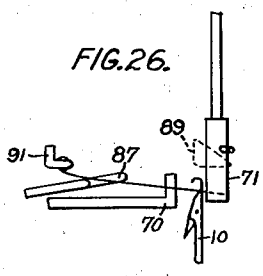

FIG.27.

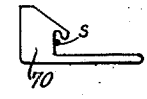

FIG.29.

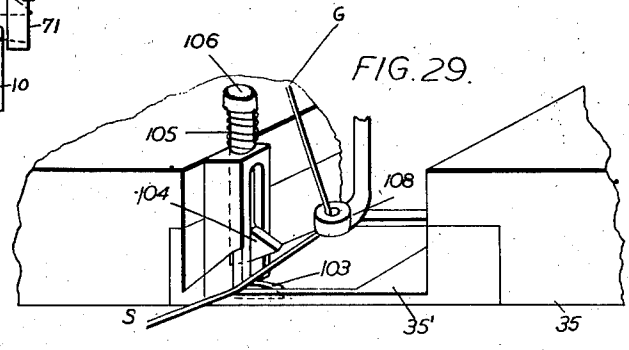

R. N. Toone + T. L. Collins, Inventors
By W. B. Collings
Attorney

Patented June 5, 1945 2,377,729

UNITED STATES PATENT OFFICE

2,377,729

KNITTING AND KNITTING MACHINE

Ralph Norman Toone, Wollaton Park, Nottingham, and Thomas Lawrence Allen, Nuthall, England, assignors to B. Toone (Nottingham) Limited, Nottingham, England

Application August 14, 1943, Serial No. 498,638
In Great Britain May 15, 1942

17 Claims. (Cl. 66—134)

This invention is for improvements in knitting, knitting machines, and knitted articles. It is well known in the knitting art to introduce and withdraw threads during the process of knitting; such threads may for instance be splicing, plating or patterning threads. In circular knitting machines a withdrawn thread will lie as a loose or float thread along the inside of the fabric (normally a knitted tube) until again re-introduced. A thread or plurality thereof may be introduced and withdrawn after the completion of one or more courses or may be introduced and withdrawn during the production of a single course or each of a plurality of courses (successive or otherwise). For many purposes such as stockings it is necessary or desirable to remove the float threads; this involves an extra process after the articles have been made with a consequent increase in cost of production and loss of material (the float threads being waste). With a view to avoiding such increase in production cost and loss it has already been proposed to trap and cut the float threads during the knitting process and in particular reference may be directed to prior U. S. Patent No. 2,295,450 granted September 8, 1942 on an application filed by Bernard T. Cole, which discloses means for cutting the thread at each withdrawal so as to avoid floats. In all known methods of cutting such threads, however, there is always a short length of cut thread left on the inside of the fabric at the position when the thread is introduced and withdrawn. This is clearly a disadvantage rendering the article less sightly than would otherwise be the case; furthermore it is a distinction between goods produced on circular knitting machines and those produced on straight bar knitting machines which operates to the detriment of the former.

The principal object of the present invention is to provide means whereby this disadvantage is overcome by so arranging matters, in an independent needle knitting machine, that there is no loose protruding "end" of thread on the interior of the fabric either at the position of introduction or withdrawal of an additional thread or threads. The expression additional thread means and includes a splicing thread, plating thread or any thread which in the course or courses whereat it is knitted is not the sole thread that is knitted. The additional thread may be formed into knitted loops throughout the whole of its period of introduction or otherwise as desired.

With this object in view the invention consists in feeding an additional thread and during the process of knitting the same severing it so that all the thread extending from the point of severance to the needles is knitted in, and re-introducing the same or a different thread with a free end extending beyond the point of introduction which free end is of such a length that the needles in descending to knit absorb or draw in such length and knit it.

In one method of carrying the invention into effect a thread feeder is provided having means for severing the thread during the process of knitting and for retaining and re-introducing the severed end. By the expression "the severed end" is to be understood the end of thread extending from the supply to the point of severance, and by the expression (hereinafter employed) "loose end" is to be understood the complementary thread end that is attached to the fabric.

In the application of the invention to a circular knitting machine of the type in which the needles rotate relatively to the thread feeders, a feeder for an additional thread is provided together with means for severing such thread during the process of knitting so that the loose end, as distinct from the severed end, is all knitted in, means for anchoring the severed end and means for re-introducing such end across the needle circle and for releasing such severed end so that on re-introduction the severed end is completely knitted in and no loose threads or floats are formed.

The invention further includes a method of introducing a yarn to the needles of an independent needle knitting machine, in which the yarn end extending from the feeder is substantially equal to, or slightly greater than, the distance from the feeder to the needle knocking-over point so that the whole of the said end is knitted in. The invention also includes the knitted article produced.

Reference will now be made to the accompanying drawings, in which

Figures 1 and 2 show how a loose end of thread is knitted in, and

Figure 3 how a severed end is knitted in.

Figures 4–7 show, in side elevation, one mechanism according to this invention and illustrates its operation;

Figure 8 is a plan of the eye of the feeder therein, while

Figure 9 is a section through the trapper and cutter.

Figure 10 is a side elevation and Figure 11 a front elevation (looking from inside the needle

circle) of another mechanism according to this invention.

Figures 12–15 are views, on a larger scale, illustrating the action;

Figure 16 is a sectional plan, taken on the line 16—16 in Fig. 11, showing the trapper and cutter just closing;

Figure 17 is a like view, showing it closed, and

Figure 18 is a vertical section through the trapper;

Figures 19 and 20 show, in side elevation, a third mechanism according to this invention and illustrate its action, while

Figure 21 is a perspective view and Figures 22 and 23 are end views of the trapper and cutter therein.

Figures 24–27 are diagrams illustrating a fourth mechanism according to this invention.

Figures 28 and 29 illustrate a fifth mechanism according to the invention.

Referring first to Figs. 1 and 2, needles are indicated at 10, sinkers at 11, and the knocking over point at K. O. It will be seen that the loose end of additional thread S is of such a length that in descending to the knocking over point the needles knit it all in. In producing this result, it is important that the thread is severed before being diverted from its normal path of feed to the needles, i. e. while it is still running to the needles in correct knitting relationship, as contrasted with the usual method of first withdrawing the thread from the needles by displacing the feeder and then cutting said thread extending from the inoperative feeder. In Fig. 3, it will be seen that the length of the free end extending from the feeder 12 is substantially the same as the distance between said feeder and the knocking over point, and the length extending beyond the first needle 10' taking it is not substantially greater than that required for a knitted stitch, so that substantially all the thread is knitted in.

In the embodiment shown in Figs. 4–9, a feeder 12 for the additional thread S is provided and the arrangement is such that when such feeder 12 is in the feeding position the forward lower end thereof is located a short distance outside the needle circle so that the thread is fed to the needles as the needles in rotation pass the feeder. The thread passes downwardly at an angle from a guiding eye 13 and a tension device 14, through an eye 15 formed in the feeder. This feeder eye 15 communicates with a slot 16 (Fig. 8) in the side of the feeder 12 so that the thread can be introduced laterally through the slot 16 and thence to the feeder eye 15. For this purpose, the mouth of the slot 16 extends up one side of the feeder 12, so that the thread can enter it laterally, and the slot (cut completely through the thickness of the feeder from the top to the bottom thereof) then extends forwards to the eye 15. The feeder is mounted for pivotal movement in a vertical plane and so that the forward feeding end can be moved in an arc upwardly away from the needles.

In the particular embodiment under discussion the feeder is substantially radial to the needle circle and is pivoted at 17 near its outer end to a non-rotary part of the machine (which part may be a bracket 18 pivoted at 19 to the latch ring 35 so that all the mechanism carried by it may be elevated to an inoperative position) so that the feeding eye 15 may move up and down along a curved path that is wholly exterior to the needle circle but is such that the eye, in its lowered and operative position, is closely adjacent to the needles 10. At a position beyond its pivot 17 the feeder 12 is engaged by a lever 20 pivoted at 21 to bracket 18 and adapted to be actuated by a projection 22 on a common operating member in the form of a thrust bar 23 which is operated in known manner by a drum, cam chain or other device. The position of the projection 22 on the thrust bar 23 is preferably adjustable and the projection 22 is disposed a short distance below the upper end of the bar, such upper end being in contact with the one end of a second lever 24 pivoted at 25 to the bracket 18, which lever 24 at its opposite end is formed with a toothed rack or quadrant 26. The position of said bracket 18 in relation to the needle circle is preferably adjustable, and to this end such fixed part is mounted on the machine standard. The arrangement is such that upon upward movement of the thrust bar 23, the quadrant lever 24 is moved a little while before the projection 22 makes contact with the first-mentioned pivoted lever 20 to raise the feeder 12.

The quadrant lever 24 meshes with a pinion 27 suitably pivoted upon said bracket 18 and connected to a trapping and cutting finger 28 which is adapted to swing across the needle circle above the heads of the needles 10, and has its trapping and cutting operations determined in its swing by a curved cam track 29 on the said bracket. This trapping and cutting finger 28 consists of a sleeve 30 connected to the said pinion 27 and housing a plunger 31 which is pressed upwardly by spring 32, so that its exposed upper end engages and travels along said cam track 29. The latter is stepped at 29' so that when the finger is in its extreme outward position (Fig. 4) the trapper and cutter 33 (at the lower end of the finger) is held open and as the finger 28 swings inwards across the needle circle the plunger 31 is permitted to rise to close the trapper and cutter about the time that the finger passes over the eye 15 of the feeder 12. A further movement results in the plunger 31 riding freely over a pivoted latch 34, and when the finger swings in the reverse direction, during the first part of its movement the plunger engages the pivoted latch and is depressed to open the trapper and cutter.

The sequence of operations is as follows: When the feeder 12 is in its feeding position, in which it extends substantially horizontally from its pivot 17 towards the needles 10, the trapping and cutting finger 28 occupies its uppermost position in which it inclines downwards and outwards (at an angle at some 45° or other appropriate angle) and the trapper and cutter is open at the front side of the needles. The yarn or thread runs downwards and outwards from the guiding eye 13 on the bracket 18, through the open trapper and cutter 33 to the feeder eye 15 and thence to the needles 10 as shown in Fig. 4. As the push rod 23 is raised its first effect is to swing the finger 28 towards the needles, whereby the finger draws a bight (as shown in dotted lines in Fig. 7), from the running thread, above the feeder 12 towards the needles 10. At approximately the instant in which the trapper and cutter 33 passes over the eye 15 of the feeder the plunger 31 reaches the step 29' in the curved cam track 29 and rises, so that the trapper and cutter 33 closes to trap and cut the running thread at the yarn supply side of the feeder eye, it being noted that the yarn is cut while it is still running in correct knitting relation to the needles. During continued movement of the finger 28 towards the centre of the

needle circle the trapped and cut end of the thread is carried to the inside of the circle, while the loose end is drawn by the needles through the feeder eye and is knitted. It is important to note that the thread is cut while it is still being fed to the needles, so that the loose end is knitted in. Immediately the trapper and cutter **33**, in its swing, passes or clears the inner end of the feeder **12** the latter proceeds to rise to a non-feeding position.

Throughout the period during which the thread is held withdrawn the trapper and cutter **33** occupies its position at the inside of the needle circle, the withdrawn thread extends above the needle heads from the guiding eye to the trapper which is at the back of the needles, and the feeder occupies its raised non-feeding position outside the needle circle. To re-introduce the thread the push rod descends, Fig. 6. This simultaneously produces the descent of the feeder **12** and an outward swing of the trapping and cutting finger **28** under the action of suitably disposed springs. As the feeder descends the thread extending between the guiding eye **13** and the trapper and cutter **33** passes into the mouth of the slot **16** in the feeder, and thence through the slot into the feeder eye **15**. At this stage the yarn extends downwards from the guiding eye **13** to the descending feeder eye **15**, and thence upwards and between the needles **10** to the trapper **33**. At or about this time the feeder reaches its feeding position, Fig. 7, the trapping and cutting finger **28** is approaching the needles, the plunger **31** rides up the before-mentioned latch **34** (which latch is formed with an inturned face) and the trapper and cutter **33** opens to release the end of the thread to the needles. This free end is therefore knitted up by the needles. The distance between the end of the feeder eye **15** and the knocking-over point K. O. is substantially the same as or slightly less than the length of free end of yarn extending from said eye **15** to the trapper **33** at the moment of release. Hence the first needle to engage the thread carries its extremity down to the knocking-over point, where it is gripped by a needle and sinker.

Continued descent of the push rod **23** causes the trapping and cutting finger **28** to swing outwards still further until it reaches the extremity of its travel, in which the trapper and cutter (maintained in the open position by virtue of the associated plunger riding up the step **29'** in the cam track) is located between the guiding eye **13** and the eye **15** of the feeder. As the open trapper and cutter reaches this attitude, the running thread slips into it, Fig. 4.

Referring to Fig. 9, the cutter consists of a fixed cutting edge **33***a* on the sleeve **30** and a shoulder **33***b* on the plunger **31** and movable away from the fixed edge **33***a* when the plunger **31** is depressed, to leave an opening the length of which is substantially normal to the plunger and the running thread. The trapper consists of suitable thread-gripping surfaces **33***c* and **33***d* associated with the sleeve and the plunger, and the plunger end **31'** is so chamfered that as the open trapper and cutter moves to the attitude just mentioned, it brushes past the running thread which then springs into the said opening.

In order to provide for yarn changing, there may be a plurality of trapping and cutting fingers and one or more feeders, said fingers being movable to bring any selected one of them into association with a feeder. For example there may be one feeder and a plurality of fingers each with a trapper and cutter, the inoperative trappers and cutters are located inside the needle circle, the trapped threads extending one to each, and the selected trapper and cutter being located outside the needle circle. In making a yarn exchange, this trapper and cutter is swung to the inside of the needle circle to trap and cut the withdrawn yarn, the fingers are shogged to bring another one of them into the appropriate position, and the selected finger is swung outwards as before described.

Alternatively, there may be a finger for each of a plurality of interchangeable feeders.

Figs. 10–18 show a further construction according to this invention which embodies a stationary feeder consisting of a feeding eye **40**, and a trapper and cutter (indicated generally at **41**) which is movable to the outer side of the needle circle to cut and trap the additional yarn S running from the eye to the needles **10** and movable to the inside of the needle circle to reintroduce the yarn between the needles. Pivoted on the feeder spindle **42** of the latch ring bracket there is at least one feeder **43** (such as that shown in Fig. 11 for feeding the main yarn G, and movable in known manner) together with a spring biased lever **44** which serves to move the trapper and cutter **41**. The latter is secured to the lower end of the slide **45** (adjustable for length) which slides through a pivoted guide **46** and at its upper end is adjustably pivoted to crank arm **47** connected to a pinion **48**. This pinion **48** meshes with vertical slidable rack **49** arranged to be lifted against the action of a tension spring **50** when the lever **44** is rocked by a thrust rod **51**. Normally the trapper and cutter **41** is located at the inside of the needle circle. When it is desired to trap and cut the additional yarn S, thrust bar **51** rises and thereby causes the trapper and cutter to move over the heads of the needles in the approximate path shown in Fig. 10 to a position at the outside of the needle circle wherein the yarn enters the trapper and cutter. Further upward movement of the thrust bar **51** lowers the trapper and cutter so that the running yarn enters it, and while still running to the needles in correct knitting relation the yarn is cut between the eye **40** and the needles and quite close to the latter. The cut end is trapped and the loose end knitted up because the feeder eye **40** remains in feeding position. When the thrust bar **51** is lowered the spring **50** lowers the rack **49** and the trapper and cutter **41** rises over the heads of the needles and descends inside the needle circle, passing the yarn which extends from it to the eye **40** between the needles as shown in Fig. 14. The said trapper and cutter then opens to release the end of yarn held by it which end is taken by the needles and knitted in.

The trapper and cutter **41** consists of a relatively stationary blade **52** at the lower end of the slide **45** and a movable blade **53** pivoted to it at **54**, the said movable blade having a cam **55** at its upper end, which when the trapper and cutter is lowered at the outside of the needle circle engages an adjustable stationary stop **56** so as to close the blades. When closed the blades are locked by means of a tappet pivoted to the fixed blade **52** at **58**. This tappet **57** has a strip **59** depending from it which, in the locking position moves, across the blade **53** as shown in Fig. **12**, and holds the latter closed. This locking movement is produced by the engagement of an

arm 57a on the tappet with an adjustable fixed stop 60 at the outside of the needle circle when the trapper and cutter is lowered at said outside. Conversely when the trapper and cutter 41 is lowered at the inside of the needle circle another arm 57b on the tappet engages an adjustable fixed stop 61 and rocks said tappet to the opening position as shown in Figs. 14 and 15, the blade 53 being opened by a spring 62 and its movement being limited by a stop 63 against which that part of the blade 52 which extends above the blade 54 moves. To trap the yarn there is a groove 53' extending down the face of the blade 53 with which a spring wire 64 normally inclined away from said groove as shown in Fig. 15 co-operates. When the blades close this spring wire 64 is pressed towards the groove 53' by a leaf spring 65 carried by the blade 52. Cutting is effected by edges 52a, 53a on the two blades.

Figs. 19–23 show a construction in which the yarn is fed to the needles 10, in the correct knitting relation thereto, through a stationary eye 70 but is positioned for engagement by the trapper and cutter indicated generally at 71 by a movable yarn feeding eye 72, said trapper and cutter being movable to the outside of the needle circle to trap and cut the yarn running to the needles and movable across to the inside of the needle circle to introduce the trapped and cut yarn to the needles. While the yarn is being knitted the parts are in the position shown in Fig. 19 wherein the eye 72 is lowered closely behind the eye 70 and the trapper and cutter 71 is inside the needle circle. The said trapper and cutter is carried by one arm 73a of a bell-crank-lever the other arm 73b of which overlies the upper end of a plunger 72a carrying the eye 72, said plunger being guided in bracket 74. The bell-crank-lever is connected to a pinion 75 which meshes with a rack 76 drawn by a spring 77 against the upper end of thrust rod 78. When the thrust rod is raised from the position shown in Fig. 19 the trapper and cutter 71 swings across to the outside of the needle circle and the plunger 72a is raised by spring 79 so as to present a straight length of yarn extending rearwardly from eye 70 to enter said trapper and cutter. The trapper and cutter then closes to cut the running yarn and to trap the severed end, the loose end of the yarn being knitted up by the needles because the eye 70 remains in feeding position. To re-introduce the cut end of yarn the thrust rod 78 descends and, under the influence of spring 77, the trapper and cutter 71 moves to the inside of the needle circle and the eye 72 descends behind the eye 70. This causes a straight length of yarn extending between eye 72 and trapper and cutter 71 to enter the eye 70, Figure 27, which is provided with a lateral opening for this purpose, and also to enter between the needles as shown in Fig. 19. The trapper and cutter 71 then opens to release the end of yarn which is knitted up by the needles. A suitable construction of trapper and cutter 71 is shown in more detail in Figs. 21–23. It consists of an inner sleeve or spindle 80 with a cleft 81 and an outer sleeve 82 which is revolvable on the sleeve 80 and is provided with a cleft 83. Projecting from the outer sleeve 82 there is a pin 84. When the trapper and cutter 71 moves away from the position shown in Fig. 19 the two clefts are in register so that the yarn passes into them, but on reaching the position shown in Fig. 20 arm 84 makes contact with a fixed stop 85 and rotates the outer sleeve 82 so that an edge 83a of the cleft 83 cuts the yarn and that length of yarn which extends from the trapper and cutter 71 to the eye 72 is trapped between the two sleeves as shown in Fig. 23. In the final stage of movement to the position shown in Fig. 19 the pin 84 engages another fixed stop 86 so that the sleeve 82 is moved in the reverse direction and the clefts are brought into register to free the trapped end.

A fourth construction is shown diagrammatically in Figs. 24–27. The yarn S is normally fed to the needles 10 in the correct knitting relation thereto, through an eye 70 shown in elevation in Fig. 27. When it is desired to trap and cut said yarn that part of it which runs from eye 91 to the eye 70 is engaged by a pusher 87 which carries a bight of it across the needle circle above the heads of the needles 10 and positions it so as to enter the descending trapper and cutter 71 which is then closed by a stop 88. The yarn is thus cut and trapped, and the cut end is knitted in. When it is desired to re-introduce the trapped end of yarn the trapper and cutter is lowered still further. This movement carries the yarn between the needles and also into the eye 70, so as to be thereafter fed by it to the needles in the correct knitting relation, and in the final stages of the said movement the trapper and cutter is opened by stop 89. Subsequently, the trapper and cutter must be raised to its upper position, in the course of which movement it passes and is closed by the stop 88. Therefore, an upper stop 90 is provided to re-open the trapper and cutter and thereby make it ready to again descend and take the yarn.

In the construction shown in Figs. 28 and 29 the trapper 171 (which may in general be similar to the trapper and cutter 71 illustrated in Figs. 21–23 except in that the cutting edge is omitted) is separate from the cutter which is hereinafter described. The said trapper is mounted on a rod 92 slidably depending at its upper end from a sleeve 93 pivoted at 94 to a stationary part of the machine secured to the latch ring bracket 35. The said rod 92 is provided with a pin 95 which travels in a horse-shoe shaped cam track 96 on said stationary part, and also travels along a slot 97 in a crank arm 98 connected to pinion 99. The latter is engaged by a rack 100 pressed in a downward direction by a spring 101 and adapted to be raised against said spring by a thrust bar 102. The cutter is positioned within the feeding throat 35' of the latch ring 35 and consists of a fixed blade 103 and a movable blade 104 adapted to be moved down against the action of spring 105 by a plunger 106 and a pin 107 projecting from the trapper rod 92. The yarn S runs from the stationary feeder 108, between the open blades 103, 104, and over the corner of the throat 35' (which corner decides the feeding angle of the yarn and may therefore be considered as a feeder) to the needles. When it is desired to trap and cut the yarn S the thrust bar 102 is lowered so that the trapper 171 descends at the outside of the needle between the feeder 108 and the cutter 103, 104. The running yarn therefore enters the open trapper, the pin 107 presses on the plunger 106 and closes the cutter to cut the yarn while it is still running over the throat in the correct knitting relation to the needles, and at or about the same time a pin 184 projecting from the trapper engages a fixed stop 185 so that the trapper is closed to trap the cut end. The loose end is knitted up because the eye 108 and the afore-

said corner of the throat 35' are immovable in feeding position. In order to re-introduce the yarn to the needles the thrust rod 102 is raised, and this causes the trapper 171 to step over the heads of the needles to the inside of the needle circle and to lower the length of thread that extends between it and the feeder 108 between the needles. In the final stages of the descent of the trapper the pin 184 makes contact with a stationary stop 186 and the trapper is opened to release the yarn end. If desired the feeder 108 may be raised or lowered to assist in positioning the yarn accurately, particularly in its re-introduction to the needles.

We claim:

1. In the production of fabric on an independent needle knitting machine, feeding a knitting thread and an additional thread and while said additional thread is still running to and being knitted by the needles, severing it so that all the thread extending from the point of severance to the needles is knitted in, and re-introducing a thread with a free end extending beyond the point of introduction which free end is of such a length that the needles in descending to knit absorb or draw in such length and knit it.

2. In the production of knitted fabric on an independent needle knitting machine, the steps of severing a yarn close to the needles while it is still running to and being knitted by them and trapping the severed end and knitting up the loose end, introducing the trapped yarn to the needles by lowering it between them and substantially simultaneously releasing the severed end, and knitting up said yarn end.

3. In or for an independent needle knitting machine, the combination of a yarn feeder for feeding a yarn to the needles, a trapper and cutter for cutting the fed yarn and for trapping the cut end, means for effecting such relative movement between the yarn running to the needles and the trapper and cutter as will bring the yarn into the trapper and cutter while it is still being knitted, means for operating the trapper and cutter to cut the running yarn and to trap the cut end, means for effecting such relative movement between the yarn and the trapper as brings the yarn across the needle line and between the needles so as to be taken thereby, and means for opening the trapper to release said yarn.

4. Mechanism according to claim 3, having means for moving the trapper from one side to the other of the line of needles, to trap the cut yarn when at the front of the needles and to release the trapped yarn when at the back of the needles.

5. Mechanism according to claim 3, wherein the cutter cuts the yarn before it reaches the feeder, the loose end being drawn out of the feeder by the needles, and means are provided for re-threading the yarn in the feeder.

6. Mechanism according to claim 3, having means for operating the cutter to cut the yarn before it reaches the feeder so that the loose end is drawn out of the feeder by the needles, means for re-threading the yarn in the feeder, and movable means for engaging the yarn extending to the trapper and for positioning said yarn for re-introduction to the needles.

7. Mechanism according to claim 3, having means for operating the cutter to cut the yarn as it runs to the feeder so that the loose end is drawn out of the feeder by the needles, and movable yarn-engaging means separate from the feeder for engaging the yarn extending to the trapper and for re-introducing the yarn to the feeder and to position it for re-introduction to the needles.

8. For an independent needle knitting machine, the combination of a yarn feeder for feeding a yarn to the needles, to be knitted thereby, a cutter for cutting the yarn between the feeder and the needles, a trapper for trapping the cut end, means for effecting such relative movement between the yarn running to the needles and the trapper and cutter as will bring it into the trapper and cutter while it is still being knitted, means for operating the trapper and cutter to cut the running yarn and to trap the cut end, means for effecting such relative movement between the yarn and the trapper as brings the yarn across the needle line and between the needles so as to be taken thereby, and means for opening the trapper to release said yarn.

9. Mechanism according to claim 8, having operating means for causing the trapper to step over the heads of the needles from a lowered trapping position at the front to a lowered release position at the back of said needles.

10. In an independent needle knitting machine, the combination of a yarn feeder for feeding a yarn to the needles to be knitted thereby, a displaceable trapper and cutter for cutting the fed yarn and for trapping the cut end, means for displacing the trapper and cutter in relation to the yarn running to the needles so as to receive said running yarn while the latter is still being knitted, means for operating the trapper and cutter to cut the running yarn and to trap the cut end, means for displacing the trapper and cutter and for thereby bringing the trapped end across the needle line and between the needles so as to be taken thereby, and means for releasing said yarn from the trapper.

11. Mechanism according to claim 3, having the cutter permanently located at the front side of the needles.

12. Mechanism according to claim 3, having a stationary cutter permanently located at the front side of the needles at a location wherein the yarn, while being fed, runs through it.

13. In or for an independent needle knitting machine, the combination of a movable yarn feeder having an open eye for feeding yarn to the needles, a trapper and cutter for cutting the yarn and for trapping the cut end, operating means for moving the trapper and cutter outwards across the line of needles to engage the yarn running to the feeder and to cut and trap it and for moving said trapper and cutter inwards across the line of needles to carry the trapped end to the back of the needle line and then to release said trapped end, and means for raising and lowering the feeder before said release to engage the yarn, extending to the trapper, in the feeder eye and to carry said yarn down between the needles.

14. In or for an independent needle knitting machine, the combination of a stationary yarn feeder having an open eye for feeding yarn to the needles, a trapper and cutter displaceable between a trapping and cutting position in which it cuts and traps the yarn running to the needles and a release position at the back of the line of needles wherein it releases the trapped yarn, operating means for said trapper and cutter, a yarn-engaging device, a means for moving it to position the yarn, running to the feeder, to be cut and trapped by the trapper and cutter and also to position the yarn, extending to the trap-

per and cutter when the latter is in the release position, for introduction to the needles and to the open eye about the time of release.

15. In or for an independent needle knitting machine, the combination of a feeder for feeding yarn to the needles, a cutter for cutting said yarn between the feeder and the needles, a trapper for trapping the cut end, means for causing the trapper to step over the heads of the needles between a trapping position at the front of the needles wherein it traps the cut end and a lowered release position at the back of the needles wherein it releases the trapped end, and means for operating the trapper to trap and release in its respective positions.

16. Mechanism according to claim 13, comprising a common operating member movable in one direction for first moving the trapper and cutter inwards across the needle line and for then raising the movable feeder, and movable in the reverse direction for lowering the feeder and for moving the trapper and cutter outwards across the needle line.

17. For an independent needle knitting machine, the combination of feeding means for guiding a knitting yarn to the needles in knitting relation thereto, a cutter for cutting the yarn while still running in said knitting relation to the needles, a trapper for receiving the uncut yarn and for trapping the cut end, and means for introducing the yarn, extending to the trapper, across the line of needles so as to be taken by the needles and fed in knitting relation by the feeding means.

RALPH NORMAN TOONE.
THOMAS LAWRENCE ALLEN.