(12) STANDARD PATENT (11) Application No. **AU 2003200918 B2**
(19) AUSTRALIAN PATENT OFFICE

(54) Title
A method for the manufacture of a component by composite fibre construction

(51) International Patent Classification(s)
B64C 1/00 (2006.01) ***B29D 31/00*** (2006.01)
B29C 39/10 (2006.01) ***B64C 9/02*** (2006.01)
B29C 70/34 (2006.01) *B29K 105/08* (2006.01)
B29C 70/48 (2006.01) *B29L 31/30* (2006.01)

(21) Application No: **2003200918** (22) Date of Filing: **2003.03.07**

(30) Priority Data

(31) Number	(32) Date	(33) Country
102 10 517.0-116	**2002.03.09**	**DE**

(43) Publication Date: **2003.09.25**
(43) Publication Journal Date: **2003.09.25**
(44) Accepted Journal Date: **2007.09.13**

(71) Applicant(s)
Airbus Deutschland GmbH

(72) Inventor(s)
Leeraar, Tim;Filsinger, Jurgen;Staub, Martin;Gessler, Andreas

(74) Agent / Attorney
Watermark Patent & Trademark Attorneys, Level 2 302 Burwood Road, Hawthorn, VIC, 3122

ABSTRACT

"A Method for the Manufacture of a Component by Composite Fibre Construction"

A method for the manufacture of a component by composite fibre construction, where a prefabricated, semifinished product of fibre materials is placed into a closed mould, a vacuum is created inside the mould, the semifinished product is soaked in resin or a resin/hardener mixture und subsequently cured under pressure at an elevated temperature.

An automatic method for the manufacture of semifinished products or components is characterised by the following steps of the method:

- a core of two separable halves, with a shape close to the final one, is covered with at least one layer of fibre material with the aid of an automatic surround braiding process,
- after completion of the braiding, one half of the tool core is removed,
- the braiding covering the other tool core half is pressed into the specified shape of the semifinished product,
- the semifinished product shaped thus is placed into an RTM device, impregnated with resin and hardened for the completion of the component, and
- the half of the tool core, which remained in the component, is removed from the component (e.g. by melting).

A METHOD FOR THE MANUFACTURE OF A COMPONENT IN FIBRE COMPOSITE CONSTRUCTION

FIELD OF THE INVENTION

The invention relates to a method for the manufacture of a component in fibre composite construction, preferably a fitting for aircraft structures, using the resin transfer moulding method (RTM), wherein a prefabricated, semifinished product of fibre materials is placed into a closed mould, a vacuum is created inside the mould, the semifinished product is soaked in resin or a resin/hardener mixture and the soaked product is subsequently cured under pressure at an elevated temperature.

BACKGROUND OF THE INVENTION

A method is known for the manufacture of fibre composite components where layers of fabric are cut to size, soaked in thermo-setting resin and subsequently placed into a jig. The jig with the pre-cut layers of fabric is wrapped into a vacuum foil and placed into an autoclave where curing of the component takes place. Further machining such as milling, drilling or similar is employed to finish the fibre reinforced manufactured component.

Such components are also known as fibre reinforced plastic material components (FRPM), and have found traditionally application in the aeronautical and space technology field, although in the last 20 years the area of application has expanded substantially, eg automotive field.

It would be desirable to create an automated method for the manufacture of semifinished products or components of the above-mentioned type to further reduce manufacturing costs of such components.

SUMMARY OF THE INVENTION

In accordance with one aspect of the present invention there is provided a method for the manufacture of fibre composite components, including the steps of:

employing an automated surround braiding process to apply at least one layer of fibre material onto a moulding core having two separable halves, the core having a contour or shape close to that of the finished component, thereby forming a braided fibre material body;

removing one of the moulding core halves once the braided fibre material body has been completed;

whilst remaining on the other core half, pressing the braided fibre material body into a shaped body that has the desired contour of the semi-finished component;

placing the shaped body in an RTM jig and impregnating it with an appropriate resin;

curing the impregnated shaped body; and

removing the remaining moulding core half from the finished component.

To facilitate core removal, the moulding core advantageously may be made of a meltable material.

Important advantages which the inventive method provide include manufacturing process times, a high degree of reproducibility and high component output rate. Such manufactured fibre reinforced plastic material components have a low weight compared to similar components manufactured in aluminium, and have low maintenance requirements when the component is an aircraft component.

In order to provide additional reinforcement to such FRPM component, separate reinforcement layers, eg pre-cut woven fibre sheets, may be secured to the core mould prior to the first braiding layer being applied, or in between braiding layers.

Advantageously, in forming the shaped body, the braiding portion that is no longer supported by the core half that has been removed is re-shaped into fastening structures of a shape that enable the subsequently finished component to be attached to other components, eg fixing lugs, folded web portions, etc.

Further features of the present invention will become apparent from the following description of a preferred embodiment thereof, wherein the accompanying drawings show an aircraft component made in accordance with the method described below, and a braiding core mould for the use with the invention.

BRIEF DESCRIPTION OF THE DRAWINGS

Figure 1 shows a tool (moulding) core in a perspective view for use with the invention;

Figure 2 shows three cross-sections of the tool core according to Figure 1 along Section A-A, illustrating sequential stages of the process of the invention, wherein the tool core is covered with several layers of fibre material, the lower tool core half is removed, and the non-supported portion of the braided FRPM body is deformed to provide attachment portions, respectively; and

Figure 3 shows in side, front and top elevation, a fitting manufactured according to the method in terms of the invention.

DESCRIPTION OF PREFERRED EMBODIMENT

Figure 1 shows a tool or moulding core 1 having a shape that closely resembles that of a portion of a finished fibre reinforced plastic material (FRPM) component. Moulding core 1 consists of two assembled core halves, ie an upper braiding core part 2 featuring a curvature 2a, and a prism-shaped lower braiding core part 3. In a first process step for the manufacture of a FRPM component, such as a fitting for aircraft structures, the assembled tool core 1 is covered with at least one layer of fibre material with the aid of an automatic surround braiding process. The braiding direction is indicated by arrow 4.

The first cross section I in Figure 2 shows the tool core 1 with its two halves 2 and 3, where the tool core 1 is covered in several layers of fibre material 5. Pre-cut reinforcement layers, preferably made of fibre material, can be fixed onto the braiding core or after an optional number of fibre material layers have been applied so that these reinforcement layers are covered with further fibre materials until a specified thickness of braiding 6 has been produced. The application of all layers of fibre material takes place with the above-mentioned automatic surround braiding process.

The second Section II in Figure 2 shows the upper tool core half 2, the prism shaped lower braiding core part 3 having been removed after completion of the braided fibre material body 6.

The braided fibre material body 6 is given a specified shape, ie that of the desired semifinished product 7, by pressing. Section II shows an intermediate position. The final shape of the semifinished product 7 can be seen in Section III where the shaped semifinished product 7 has fixing lugs 8. The term fixing lug 8 refers to a fixing part for connection to a primary structure of an aircraft. After removal of the prism-shaped lower braiding core part 3 and before placement of

the body into the RTM device, it is also possible to re-shape the braiding into a semifinished product with skin connections 15 by folding the loose reinforcement layers back, as can be seen in Figure 3 for example. In this case, a skin connection 15 can be formed by the outer skin of a structural component.

After completion of the fully shaped semifinished product 7 with fixing lugs 8, it is placed into an RTM jig, not shown in the drawing, impregnated with resin and cured to obtain the component. Subsequently, the upper half 2 of the tool core 1, which remains in the cured component, is melted out of the component. Finally, the cured component can be subjected to mechanical machining processes, such as milling, drilling, fitting of bushes etc, as per conventional practice.

The fitting 9 shown in Figure 3, which is an aircraft structure, can be manufactured with the method according to the invention, whereby a system for the implementation of a braiding process is applied. The system consists of an automatic braiding machine, a manipulation system and an industrial robot that carries a complex braiding core. Using this method, it is possible to create preliminary profile shapes by reshaping and sewing, connection elements with a composite, detachable core, and hollow bodies with a meltable core.

The fitting 9 of Figure 3 has a double-T cross section 10 where hollow section 14 is located between the plates 12 and 13 which are connected to each other via a cross plate 11. The fitting 9 is built up of braiding layers 5, ie of layers of fibre material, in which the chosen material thicknesses can be selected such that the braiding produces a thickness of 1.2 mm for one braiding layer and a thickness of 0.25 mm for one reinforcement layer at a fibre volume content of about 60%. For this example, the thickness of the braiding layer results from a thickness of 0.4 mm for the stationary thread layers and a thickness of 0.8 mm for the braiding thread layers in + and – alignment. The fitting 9 manufactured with this surround braiding method has properties specific to this method; for example, the braided hose has a variable fibre orientation over the cross plate area 10 of the fitting 9. For the braiding threads, this orientation will start with +/- 30° and end with +/- 60° to 70°. Across the braiding area, the stationary threads (0°), too, have a variable angle.

THE CLAIMS DEFINING THE INVENTION ARE AS FOLLOWS:

1. Method for the manufacture of fibre composite components, including the steps of:

- employing an automated surround braiding process to apply at least one layer of fibre material onto a moulding core having two separable halves, thereby to form a braided fibre material body, wherein at least one of the moulding core halves has a shape or contour that is close to a substantial part of the finished fibre composite component;

- removing one of the moulding core halves once the braided fibre material body has been completed;

- whilst remaining on the other core half, pressing the braided fibre material body into a shaped body that has a shape or contour resembling that of the finished fibre composite component;

- placing the shaped body in an RTM-jig and impregnating the shaped body with an appropriate resin;

- curing the impregnated shaped body; and

- removing the remaining moulding core half from the finished fibre composite component.

2. A method according to claim 1, characterised in that after an optional number of fibre material braiding layers have been applied, pre-cut reinforcement layers are fixed to the fibre material body being braided, and that the reinforcement layers are braided over with further fibre materials.

3. A method according to claim 2, characterised in that reinforcement layers of fibre materials are used.

4. A method according to any one of claims 1, 2 or 3, characterised in that, before being placed in to the RTM jig, part or the entire portion of the braided fibre material body that is no longer supported after removal of one of said halves of the moulding core is re-shaped into fastening structures of such types that enable the fibre composite component to be fixed to other structures.

5. A method according to claim 4, characterised in that the re-shaped braided fibre material body portions are fixing lugs.

6. A method according to claim 4, characterised in that the re-shaped braided fibre material body portions are folded back to provide main connection webs.

7. A method according to any one of the claims 1 to 6, characterised in that the cured component is subjected to mechanical machining processes that include milling, drilling, fitting of bushes, to obtain the finished fibre composite component.

DATED this 25th day of March 2003

AIRBUS DEUTSCHLAND GMBH

WATERMARK PATENT & TRADE MARK ATTORNEYS
290 BURWOOD ROAD
HAWTHORN VICTORIA 3122
AUSTRALIA

CJS/APR

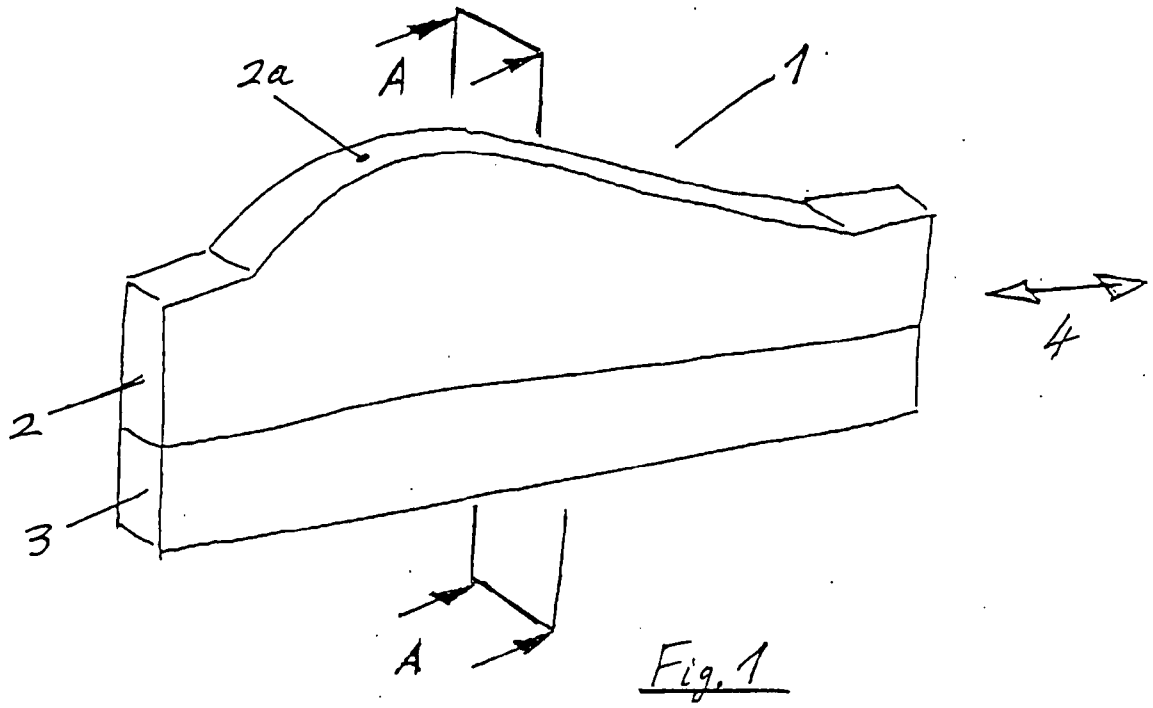

Fig. 1

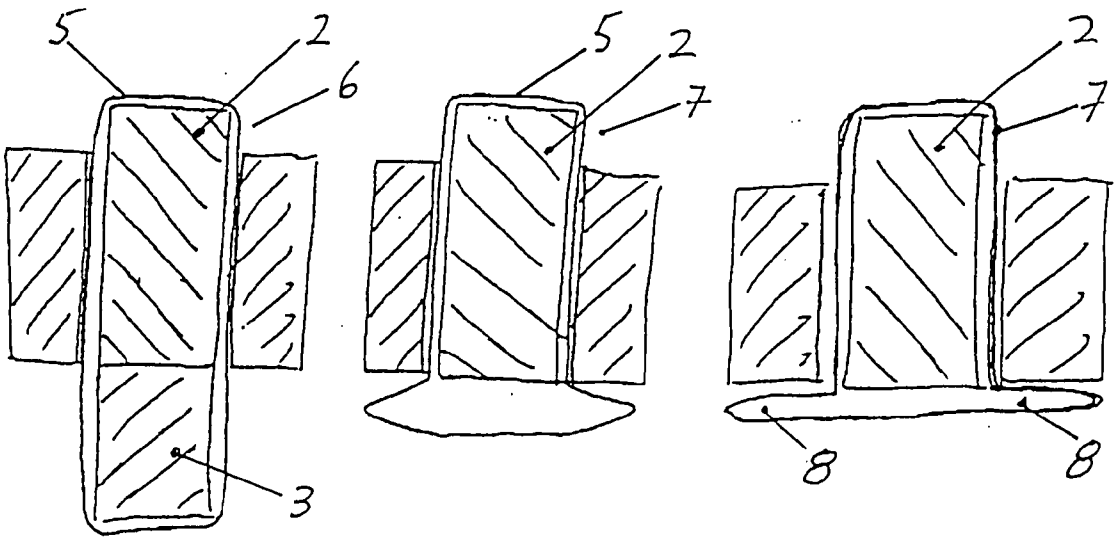

Cross-section I Cross-section II cross-section III

Fig. 2 [Section A-A]

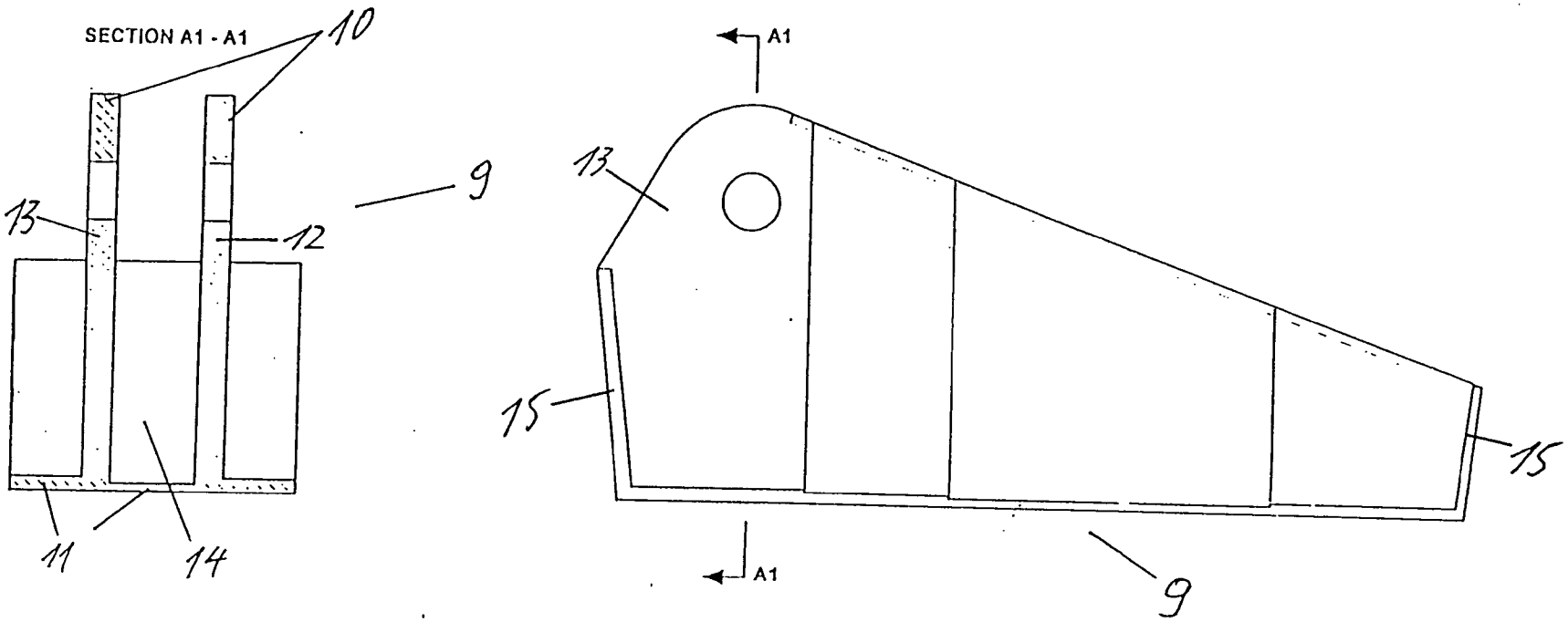

Fig. 3

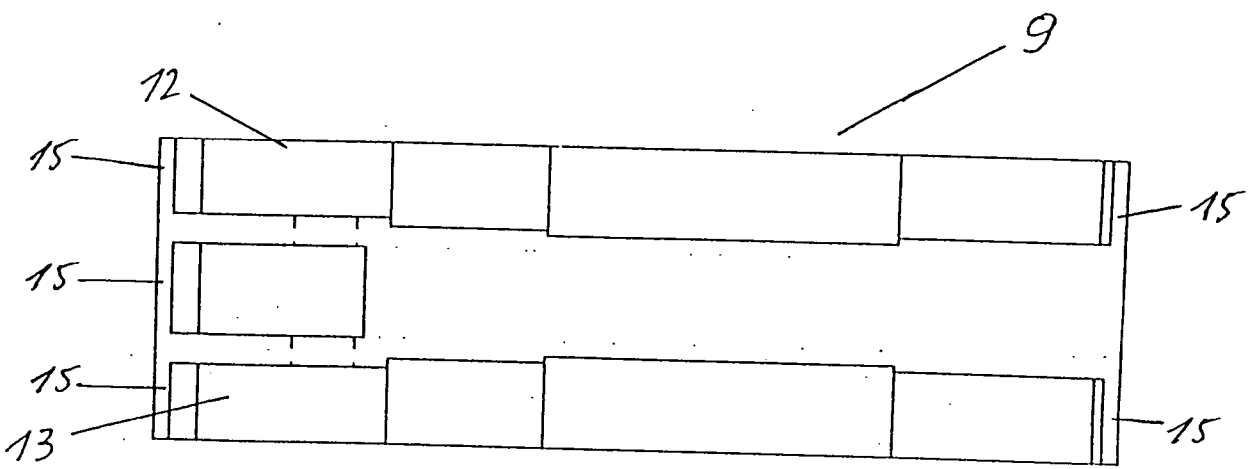

99HH55