United States Patent [19]

White et al.

[11] **3,800,891**

[45] **Apr. 2, 1974**

[54] **HARDFACING COMPOSITIONS AND GAGE HARDFACING ON ROLLING CUTTER ROCK BITS**

[75] Inventors: **Anderson D. White; Allen E. Wisler,** both of Houston, Tex.

[73] Assignee: **Hughes Tool Company,** Houston, Tex.

[22] Filed: **Apr. 18, 1968**

[21] Appl. No.: **730,671**

Related U.S. Application Data

[63] Continuation-in-part of Ser. No. 515,603, Dec. 22, 1965, abandoned.

[52] **U.S. Cl.** **175/374**

[51] **Int. Cl.** **E21c 13/00**

[58] **Field of Search** 175/374, 375, 409, 410, 175/411; 29/492, 182, 182.1, 182.2, 182.3, 182.7, 182.8, 198, 473.1

[56] **References Cited**

UNITED STATES PATENTS

2,407,642	9/1946	Ashworth	175/374 X
2,660,405	11/1953	Scott	175/375
2,833,520	5/1958	Owen	175/409 X
2,887,302	5/1959	Garner	175/374
2,939,684	6/1960	Payne	175/375
3,120,285	2/1964	Rowley	175/409 X
3,165,822	1/1965	Beeghly	29/182.7
3,279,049	10/1966	Ellis	29/473.1 X
3,380,861	4/1968	Frehn	29/182.7 X

Primary Examiner—Nile C. Byers, Jr.

[57] **ABSTRACT**

The novel hardfacing compositions are sintered tungsten carbide granules in an alloy steel matrix, the granules consisting of grains of monotungsten carbide cemented together with a number of novel binders - iron, nickel, alloys of the three iron group metals and metallic alloys including at least one iron group metal and at least one metal outside such group. Also disclosed are granules comprising a mixture of monotungsten carbide and ditungsten carbide cemented together with a metallic binder, preferably iron.

Such hardfacings are particularly useful when welded to the gage surfaces of rolling cutters of rock bits, particularly rolling cone cutters made of alloy steel. In such applications the granules are preferably of rounded and chunky shapes, avoiding the sharp edges and corners and the slivery shapes which are likely to go into solution with the matrix. Part of the matrix comes from the melted surface of the alloy steel cutter and part preferably comes from a hardfacing welding tube containing the granules.

These rolling cutter gage hardfacings may also utilize compositions heretofore known but not previously used as gage hardfacings, e.g., monotungsten carbide granules with a cobalt binder. Success achieved by the inventors may be attributable in part to powders of ferromanganese and ferromolybdenum added with the granules as part of the filler in the welding tube, a preferred pre-application composition being about 1.0 percent manganese, 0.25 percent molybdenum, balance essentially low carbon steel.

14 Claims, 12 Drawing Figures

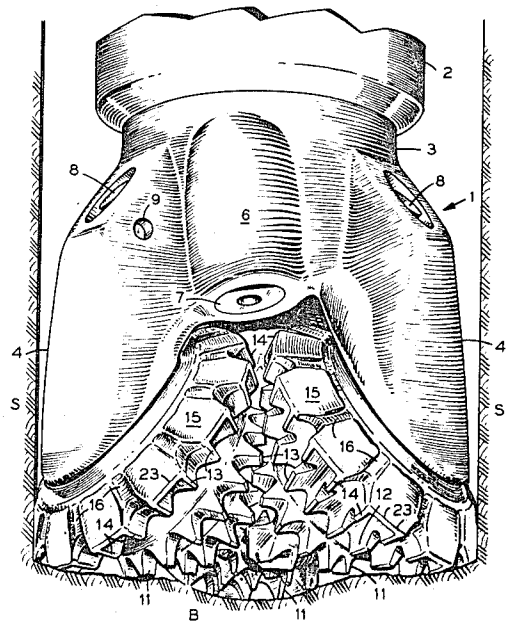

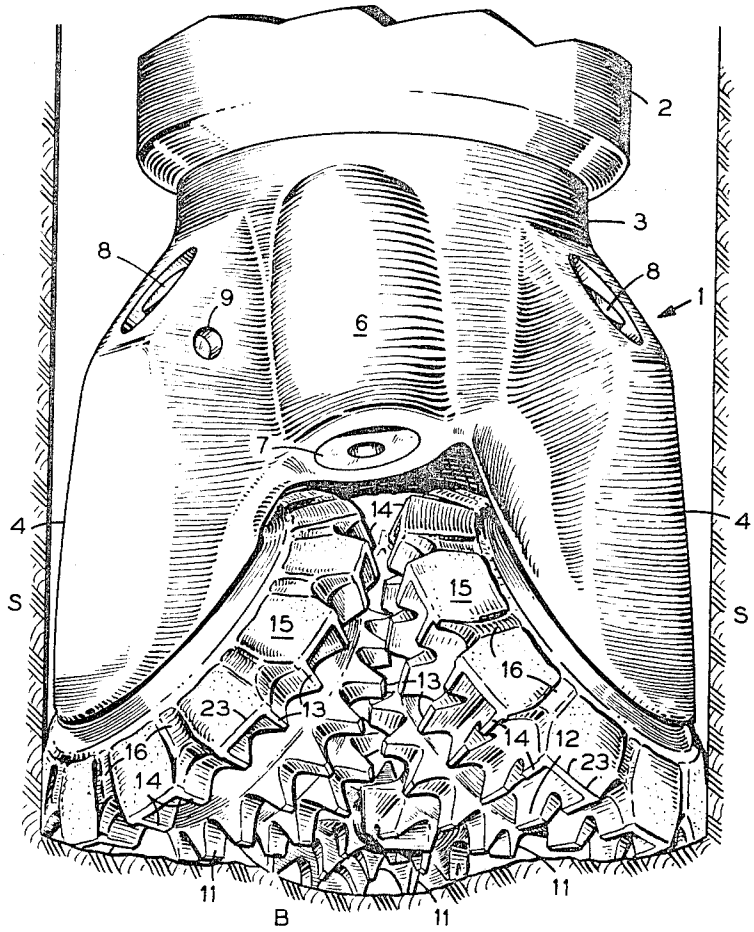

FIGURE 1

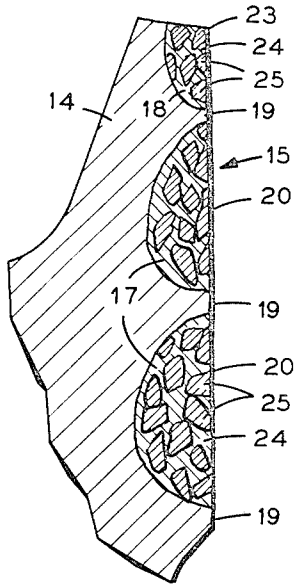

FIGURE 3

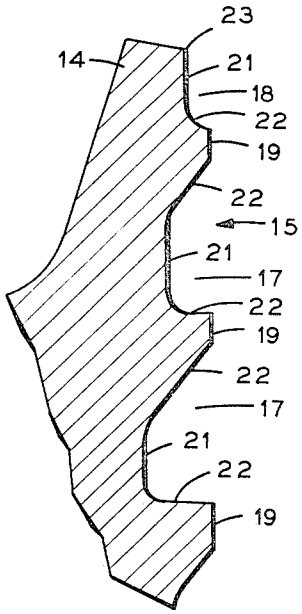

FIGURE 4

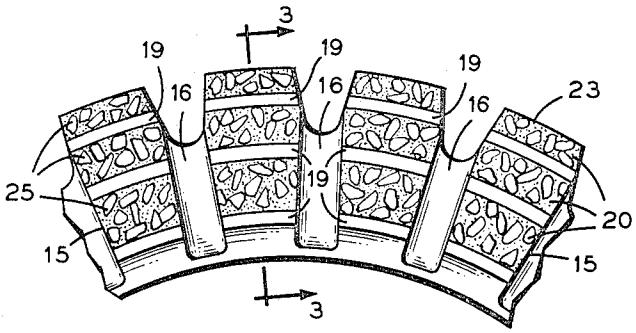

FIGURE 2

ANDERSON D. WHITE
ALLEN E. WISLER
INVENTORS

BY Roy H. Smith, Jr.
ATTORNEY

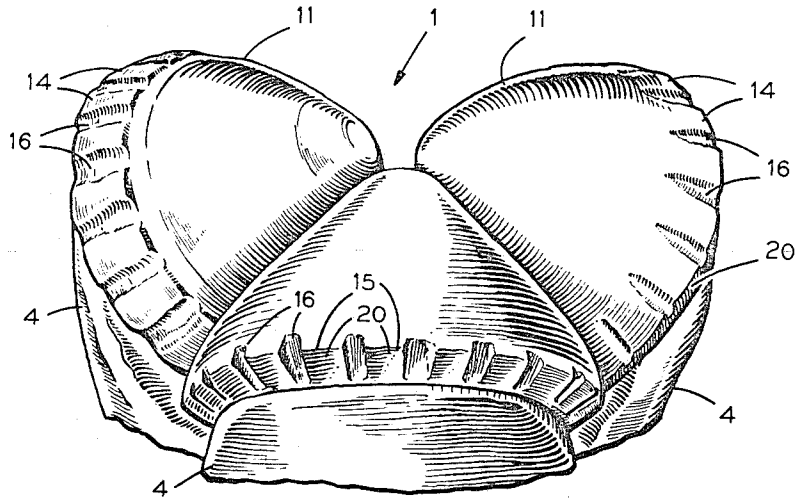

FIGURE 5

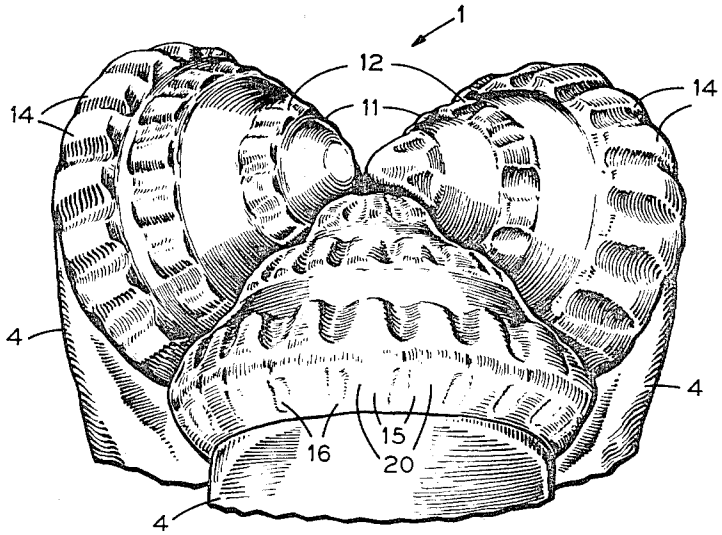

PRIOR ART

FIGURE 6

ANDERSON D. WHITE
ALLEN E. WISLER
INVENTORS

BY Roy H. Smith, Jr.
ATTORNEY

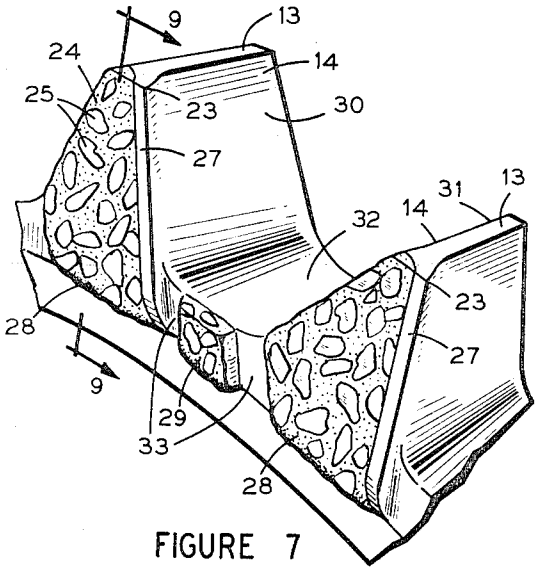

FIGURE 7

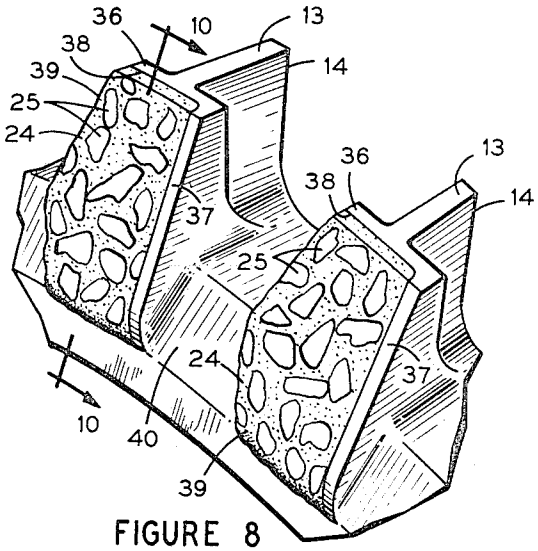

FIGURE 8

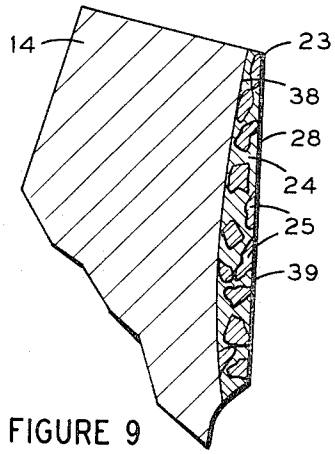

FIGURE 9

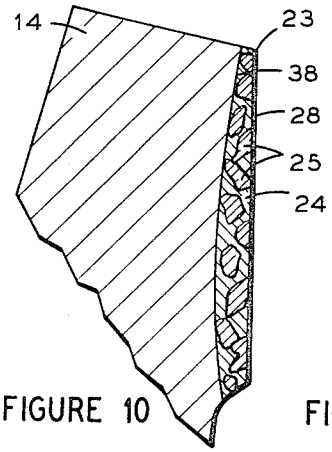

FIGURE 10

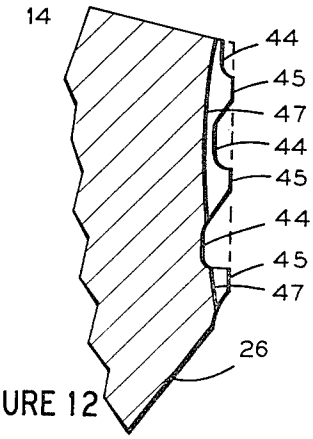

FIGURE 12

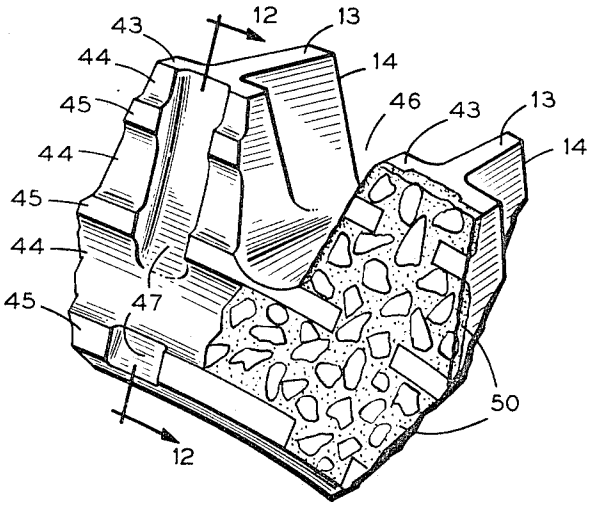

FIGURE 11

ANDERSON D. WHITE
ALLEN E. WISLER
INVENTORS

BY Roy H. Smith, Jr.
ATTORNEY

HARDFACING COMPOSITIONS AND GAGE HARDFACING ON ROLLING CUTTER ROCK BITS

The present application is a continuation-in-part of a co-pending application of the same inventors, Ser. No. 515,603, filed Dec. 22, 1965, now abandoned Apr. 18.

The present invention relates to various cutting tools and abrasion resistant tools, particularly rolling cutter rock bits and more specifically to wear resistant weldments or hardfacings in the gage surfaces of the cutters of such bits. Even more specifically, it deals with such hardfacings of tungsten carbide together with a binder including an iron group metal and a steel alloy matrix.

The typical rolling cutter of a rotary rock bit has the general shape of a bi-frusto conical shell, the interior surface constituting a bearing while the outside contains the cutting structure. The cutter is mounted on a bearing pin extending angularly down and in from the periphery of the bit head towards its center (and the center of the hole) so that the lowermost part of one of the conical surfaces, usually much larger than the other, lies generally horizontally on the bottom and cuts such bottom as weight and torque are applied to the bit. The motion is generally the same as it would be if the cutter were laid on such main conical surface and rolled without restraint, although in some designs the center line of the bearing pin is deliberately offset from the center of the bit to induce a certain amount of skidding and scraping. In addition, some such skidding and scraping is purposely introduced by designing the bit so that the apex or projected apex of the conical surface falls to one side of the bit axis.

This larger conical surface terminates outwardly at a maximum diameter ring (measured from the cutter's own axis) commonly referred to as a "gage point", at which point it intersects the second and smaller conical surface. The second conical surface extends from the gage point in the opposite direction from the main conical surface, inwardly toward the cutter axis, and terminates at the outer edge of an annular surface which surrounds the open mouth of the cutter. The cutter is designed so that when it is mounted on its bearing pin on a vertically disposed bit the portion of this smaller conical surface lying at the greatest distance from the bit axis will also be vertical and will be spaced from such axis, assuming no wear, the full radius of the desired hole. Since the small cutter surface has as a major chore maintaining the full gage of the borehole, it has come to be known as the "gage surface" of the cutter. The importance of such gage-maintaining function in an oilwell can scarcely be exaggerated. Since all subsequent operations such as running in casing and cementing it in place depend on having a full gage hole, the customer demands and obtains it in one way or another. If a bit drills an undersize hole, the following bit must be used to ream the hole to full gage, even if in so doing the second bit becomes useless for further drilling. Needless to say, the bit which drilled the undersize hole will not be reordered if a better one is available.

Thus the gage surface of a rolling cutter used in oilfield drilling is completely unlike many other bits used in drilling rock, and must even be better than the bottom-cutting structure of the same rolling cutter on which it is employed. Wear of a gage surface cannot be tolerated, whereas it makes little difference if the teeth which cut the inner part of the hole gradually wear away, so long as they continue to penetrate effectively. Similarly, drag bits and other drills used to dig shot

holes and the like may wear away even on their gage surfaces, as the diameters of such holes are not critical and can taper downwardly and inwardly without ill effect.

The prior art relating to rock penetrating bits is thus of little value as guidance in seeking improvements in the gage surfaces of rolling cutters used in drilling full diameter holes - except for that segment of the prior art dealing specifically with such gage surfaces of rolling cutters of oilfield bits.

Even when the prior art deals with gage surfaces aimed at maintaining full gage, it is of little value if the bit is not a rolling cutter type, i.e., if it is a drag blade bit or equivalent. A gage surface of a rolling cutter may be thought of as a number of discrete pads, each pad lying on the smaller conical surface of the cutter, the axis of which surface has an axis coincident with the inclined bearing pin axis. Each pad rotates around such pin axis and also moves around the bottom of the hole as the bearing pin rotates about the center of the hole and the cutter rolls on the bottom.

When one considers the motion of any one of these pads relative to the sidewall of the hole, it becomes apparent that such motion is quite complex. Any one hardfacing pad is constantly changing velocity relative to the sidewall, both in magnitude and direction. During most of a cone revolution the pad is out of contact, but as it contacts the sidewall it passes through a point of maximum relative velocity, i.e., it is shock loaded. Even during such contact the relative velocity is changing, and in addition to the circumferential motions there is a downward motion as the cutters bite deeper into the formation. The result is a constantly changing, high magnitude shearing force on the gage hardfacing, during which it is required to exert a combined abrading and crushing action on the sidewall to keep it cut to a full diameter hole. The action is such as to constantly tend to push or pull the gage material out of the cone. The hardfacing must resist this action, because the gradual loosening and falling out of the hard granules, by erosion of the matrix in which they are embedded, tolerable in drag bits and other cutting structures, cannot be tolerated in the gage hardfacing of an oilfield rolling cutter bit.

The proper design of the gage surface and the cutting structure of the adjacent "heel" teeth, those outermost teeth which extent to the gage point and cut the bottom immediately adjacent the sidewall of the hole, has long been one of the most difficult problems facing the team of mechanical and metallurgical engineers who design rock bits. The cutter is subject to maximum abrasive contact with the formation being drilled at this outside area of the hole and must there do the maximum amount of rock removal, both because the cutter travels over the maximum diameter at the gage point and because the formation is toughest at the intersection of the bottom and sidewall. In some hard formations which are very abrasive, e.g., sandy limestone and sandy shale, the abrasion on the gage surface wears it away so rapidly that the bit wears under gage and must be pulled long before its cutting structure has been dulled.

To overcome these problems, rock bit metallurgists have been seeking appropriately tough and wear resistant materials since the infancy of rotary drilling. By comparison with metal carbides, the hardest of the hard metal alloys have little wear resistance and have

been abandoned in favor of carbides since as early as 1927 or 1928. In particular, tungsten carbide has been used for entire parts and as a coating or hardfacing on many earth drilling tools since about that early year.

Broadly speaking, however, there are two basically different types of tungsten carbide, the cast carbide and the sintered or cemented carbide. Cast tungsten carbide is essentially a eutectic of the monotungsten carbide and the ditungsten carbide, WC and W_2C, while sintered carbide in the past has been essentially pure WC. In the cast carbide, there is no additional material holding the grains of a granule together, while in sintered tungsten carbide granules each grain is surrounded by an iron group binder, such binder being a continuous phase which binds or cements the grains together. The usual binder has been cobalt, and it is usually added to form 3 to 15 percent of the total weight of the granule.

The cast carbide is actually the harder and more abrasive of the two, and when it can stand the impacts to which it is subject without undue crumbling it will protect against wear better than the sintered material. On the other hand, sintered carbide is tougher than cast carbide, and will withstand repeated impacts with less breakage and crumbling. For this reason sintered tungsten carbide is preferred for such shapes as inlays of massive carbide for drag bit teeth and inserts or compacts forming the cutting structure of "button" bits.

With respect to gage hardfacing of rolling cutters, however, insofar as known cast tungsten carbide has been used exclusively from the beginning of the industry to the advent of the present invention. To a large extent this choice of materials has been deliberate, because the cast carbide does have superior wear resistance and probably would always be chosen if it would hold up in service. Since there are rock formations and drilling conditions which so load and jar the gage surface that cast carbide hardfacings tend to crumble prematurely, repeated attempts have been made over the years to use sintered carbides, sometimes as inlays in the gage surface and sometimes as hardfacings welded into recesses in the gage. Until the present time such attempts have been unpromising or outright failures, the carbide material crumbling, cracking, tearing out or otherwise failing well before a comparable cast carbide gage hardfacing.

Such failures are eliminated in the gage hardfacing of the present invention, although it is not completely clear why the present invention provides excellent sintered hardfacings and previous attempts did not. One explanation may lie in the nature of the matrix, a consideration not mentioned above. As used herein, the term "matrix" means the material immediately surrounding the carbide granules, material which has been fused and allowed to resolidify during the welding process; it includes the portion of the tool surface which is melted during welding as well as any material added with the carbide granules, and is distinguished here from the cobalt or other binder surrounding the grains of individual granules and knitting them together in a cohesive entity. To some extent, tungsten carbide is soluble in various steel matrices, and it is believed to be undesirable if too large an amount enters the matrix and shrinks the size of the carbide granules of the cooled and finished hardfacing. The carbide entering the matrix may increase the hardness of the matrix to such an extent that it becomes brittle and easily fractured in service. The present invention may owe its success at least in part to the materials added with the carbide to control the composition of the matrix, as these may well decrease the solubility of the carbide in such matrix.

The present invention, in one of its broadest and simplest aspects, is that of substituting sintered tungsten carbide granules for the cast fragments of tungsten carbide known in the prior art, other constituents and procedures being essentially the same. The invention also involves varying the type of metallic binder used to knit the tungsten carbide grains into a tough, abrasive granule, employing not only the usual cobalt but alternative binders including either of the other iron group metals (iron and nickel), the various binary and ternary alloys of the iron group metals, and metallic binders in which one or more iron group metals form the principal part of the binder and various other metals form the balance. The generally useful range of the binder fraction of the granules is 3 to 15 percent by weight, about 6 percent being the preferred fraction. The granules are preferably of rounded and roughly spherical shapes, avoiding sharp edges and slivers which can easily go into solution in the welding matrix. The size of the granules is not critical, a range of 0.009 inch to 0.093 inch largest cross sectional dimensions being typical of the present invention. The compositions using tungsten, carbide with binders other than cobalt are believed to be novel in applications on all cutting tools and surfaces requiring abrasion resistance, and are so claimed at the end of the present specification.

Another important aspect of the present invention is the nature of the matrix which secures the sintered carbide granules to the gage surface of the cutter. This matrix is a tough and fairly hard alloy steel, the hardness being in the range of about 44 to about 63 Rockwell "C" and preferably within 58 to 62 of such range, as applicants have discovered that matrices such as ordinary steels, brazing materials and very hard steels are either too weak or too brittle to withstand the constant shear stress experienced in service. The alloy steel of the matrix is derived partly from the alloy steel cutter, typically a nickel-molybdenum steel, and partly from the welding rod or tube, or sometimes almost entirely from the portion of the cutter surface melted in the welding process, the tube supplying only low carbon steel. Various welding methods may be used, e.g., atomic hydrogen or oxy-acetylene, and the hardfacing granules may be applied in advance of welding, as by sticking them to the gage surface with an adhesive like sodium silicate, or, preferably, are applied from a steel welding tube with the granules constituting a filler for the tube. The raw material mix for such tubes is preferably 30 or 40 weight percent matrix, the balance being the cemented carbide granules.

The powders added with the granules are also of some significance, as to some extent they both control the final hardness of the matrix and limit the amount of tungsten carbide which goes into solution. A preferred technique is to add powders of ferromolybdenum and ferromanganese to give a pre-application matrix composition, including the typically low carbon steel wall of the tube, of about 1.0 percent manganese and 0.25 percent molybdenum, balance essentially low carbon steel. Lower percentages of manganese and molybdenum down to zero of each are satisfactory, although not quite as good, while percentages as high as the 2.0 per-

cent mangangese and 0.5 percent molybdenum used with the prior art cast carbide result in a hardfacing which is generally too hard and brittle (hardness about 65 Rockwell C).

A final important aspect of the invention is the discovery by the undersigned that a generous fraction of the tungsten carbide, and perhaps all of it, may be ditungsten carbide W_2C, despite the fact that the prior art teaches that only the monocarbide, WC, can be sintered and welded. The best results obtained by applicants with WC - W_2C mixtures were with the use of an iron binder, although other binders also appear feasible. This aspect of the invention is believed to possess novelty and utility in all types of hardfacings, whether on cutting tools such as rock bits and other cutting tools, or on tool joints and other tools requiring abrasion resistance, and is so claimed at the end hereof.

Several drawing figures are appended to the present specification as a part of the complete application for patent, and in such drawing:

FIG. 1 is a side view of a new 3-cone rock bit using a preferred gage hardfacing of the present invention, the bit being shown suspended from the lowest member of a drilling string at the bottom of a vertical borehole and with the top of the bit slightly tilted away from the observer,

FIG. 2 is a fragmentary view of the gage surface of one of the cutters of the FIG. 1 bit, this view showing the gage surface polished and etched to make the details of the hardfacing visible,

FIG. 3 is a cross section through the structure of FIG. 2, as indicated by the cutting plane and arrows labeled 3—3,

FIG. 4 portrays the same structure as FIG. 3 before the hardfacing was added,

FIG. 5 is a perspective view of a worn bit which was identical to that of FIG. 1 as manufactured with the gage hardfacing of the present invention and was then used in rock drilling until its bottom cutting structure was completely dulled (but its gage remained full diameter and virtually intact),

FIG. 6 depicts another bit identical as manufactured with the bit of FIG. 1 except that its gage was hardfaced with the cast tungsten carbide of the prior art, the bit thereafter having been run for about the same footage in generally the same type formation as the FIG. 5 bit until it was no longer serviceable, this bit having some bottom cutting structure remaining but having a gage that is so rounded and undersized that it can no longer be used,

FIGS. 7 and 8 are perspective fragmentary views showing alternate gage hardfacings and heel teeth,

FIGS. 9 and 10 are, repsectively, cross sections of the FIGS. 7 and 8 hardfacings as shown by the correspondingly numbered arrows,

FIG. 11 is another fragmentary perspective view of another alternate gage hardfacing and heel tooth arrangement, and

FIG. 12 is a section of FIG. 11.

FIG. 1 shows a typical 3-cone rolling cutter rock bit 1, the particular bit being a 7⅞×7 inch "Tricone" sealed jet bit of Hughes Tool Company manufacture. The bit is shown dependent from a drill collar 2 into which it is threaded by the usual tapered shank (concealed) upstanding from bit body 3. There are three bit legs 4 equally spaced around the circumference of the body and extending downwardly therefrom, and from each leg 4 a bearing pin not visible in the figure extends downwardly and inwardly toward the axis of the bit. Between adjacent bit legs there is a nozzle boss 6 in which a jet nozzle 7 is secured, and other visible details include a vented compensator cap 8 and a plugged passageway 9 used in loading the bit with lubricant. The bottom and sidewall of the formation in which the hole is being drilled are respectively designated "B" and "S".

On each bearing pin there is journaled an alloy steel rolling cone cutter 11, the particular cutters being made with milled steel teeth 12 having elemental crests 13 and heel teeth 14 webbed together in pairs by webs 15 joining the backs of such heel teeth. It is these backs and webs 15, interrupted by relief slots 16, that constitute the gage surface of the cutter.

Such gage surface is shown in fragmentary and somewhat enlarged form in FIGS. 2, 3 and 4, from which it will be noted that in the webs 15 there are a number of hardfacing grooves 17 and 18 separated by circumferential ribs 19. Each groove has a bottom 21 and at least one sidewall 22, the groove 18 adjacent gage point 23 having no rib at the gage point. It will be apparent from a comparison of FIG. 3 with FIG. 4, the latter of which shows grooves 17 prior to adding the hardfacing, that the groove contours are altered and rounded when hardfacing 20 is welded into the grooves. Part of the alloy steel cutter metal is fused and combines with the added matrix metal to form a network of matrix metal 24 surrounding granules 25 of the sintered tungsten carbide.

The pattern for the above described hardfacing is substantially that set forth in the patent to L. L. Payne, U.S. Pat. No. 2,939,684, issued June 7, 1960, the present invention having improved on the teachings of Payne only with respect to the use of sintered tungsten carbide, including the use of a number of different binders, and, possibly, an improved matrix for the hardfacing.

The differences between the hardfacing patterns of the FIGS. 1–4 embodiment and those of FIGS. 7–12 lie entirely in the manner of joining heel teeth 14. Whereas in FIGS. 1–4 the heel teeth are connected by webs 15 running from one crest 13 to the next and relief slots 16 are provided between every other tooth and its neighbor, in the FIGS. 7 and 9 embodiment a single rib 27 projects outwardly from the back of each heel tooth 14 approximately parallel to crest 13 and the balance of the back of the tooth is grooved to receive hardfacing 28. There is no webbing between adjacent teeth, but on the other hand the facing flanks 30 and 31 of adjacent teeth are separated by a gap 32 and a small pad of hardfacing 29 is welded in a groove below this gap, the small pads being separated from the larger pads by relief slots 33. Each hardfacing pad of each type comprises a matrix 24 surrounding spaced granules 25 of sintered tungsten carbide.

The FIGS. 8 and 10 embodiment utilizes a web of alloy steel 36 milled on the back of each heel tooth 14, such web extending in both directions to give the tooth the shape of a "T". A single rib 37 projects outwardly from the leading edge of the cross bar of the T, leaving a rectangular groove 38 which is then filled with a hardfacing pad 39. Between adjacent pads 39, a large relief slot 40 is provided. As in all embodiments, the hardfacing consists of sintered tungsten carbide granules 25 dispersed in a metallic matrix 24.

The hardfacing pattern of FIGS. 11 and 12 is somewhat of a hybrid, combining features of several other patterns. Each heel tooth 14 is provided with a web 43 to give the resulting tooth crest a T configuration, the backs of adjacent teeth being separated by large slots 46. Such backs are first machined to provide alternating circumferential grooves 44 and ribs 45, and secondly are machined with transverse slots 47 extending all the way from the top of wed 43 to the lower edge of the lowermost rib 45. All of these grooves and slots are filled with hardfacing 50, the result being that there are no discrete pads. There are no relief slots between adjacent teeth, the band of hardfacing in the groove 44 closest to radial surface 26 extending around the cutter as a closed annulus.

The worn bits of FIGS. 5 and 6 will now be described in connection with the manner in which they were hardfaced and the field reports describing how they were used in drilling hole. As previously mentioned, both of these bits were virtually identical as manufactured with themselves and with the bit illustrated in FIGS. 1–4, the only difference being that the FIG. 5 bit was made with the sintered tungsten carbide of the invention while the FIG. 6 bit was made with the cast tungsten carbide of the prior art.

The cemented tungsten carbide granules utilized in the present application may be made in various ways, one preferred method being disclosed by J. R. Whanger in his co-pending application Ser. No. 708,849, filed Jan. 25, 1968, now abandoned and consisting essentially of blending micron size flours of tungsten monocarbide and cobalt or other iron group binder together with wax and a hexane or "Chlorothane NU" (1, 1, 1-trichloroethane) vehicle, pressing into pellets, disintegrating the green pellets through a screen to the desired size, heating and vacuuming to remove wax and vehicle, and sintering the granules in bulk in intimate contact with each other. The resulting loosely bonded granules separate easily along their original boundaries and have rounded, chunky shapes which may be advantageous, especially in that such material lacks sharp, splintery granules which are more likely to be dissolved in the matrix than the chunkier ones.

However, a second preferred method of making the sintered tungsten carbide granules utilized in the present invention differs from the Whanger process described above in that a large block of green material is compacted at high pressure and is then sintered, the result being that in the product emerging from the sintering furnace all particles have lost their original shapes. The block is crushed at high pressure to break it into particles which break from the block along new cleavage surfaces, and these particles are recrushed and screened to obtain the desired range of granule sizes. It is preferred that the granules be ball milled to round off sharp edges and corners, and to eliminate splintery particles of small cross section which could easily go into solution with the matrix.

COMPLETE EXAMPLE

The cutters of the FIGS. 1 and 5 bits were hardfaced by the tube method using an oxy-acetylene torch. The granules were of the second type described above, had a binder of 6 percent by weight cobalt, and ranged in size from 0.035 inch to 0.046 inch (passing through No. 14 screen and retained on No. 16 screen, both Tyler Sieve Series). The tube wall was of low carbon steel (0.15%C maximum, by weight), and sufficient powders of ferromolybdenum and ferromanganese were added with the tungsten carbide granules filling the tube so that the pre-application composition of the matrix was approximately 1.0 weight percent manganese, 0.25 percent molybdenum, balance low carbon steel. The raw material ratio was about 60 weight percent cemented WC, 40 weight percent matrix. This particular matrix melts at about 2,700°F. (The matrix also included about 1 weight percent silico-managnese added as a flux, but this material does not go into solution when the matrix is melted except in trace amounts. This material is requied only for oxy-acetylene welding, and may be replaced by other well known fluxes.)

After the hardfacing has cooled, it is ground flat as shown, and the cutters were carburized and heat treated to the desired hardness. The final hardness of the matrix, measured between adjacent tungsten carbide granules, is about 63 Rockwell C.

The cutters of the prior art bit shown in FIG. 6 were manufactured in the same manner except that *cast* tungsten carbide granules of slightly smaller size (0.014 inch to 0.035 inch) were used, and the powders added with the granules to form the filler of the tube were so proportioned as to give an overall matrix composition of 2.0 weight percent manganese, 0.5 weight percent molybdenum, balance low carbon steel. The weight ratio of tungsten carbide to matrix was about 60 to 40. The matrix melted at 2,700°F, and had a final hardness, after carburizing and heat treating, of about 58–62 Rockwell C.

TESTING

The 7⅞ inch bits of FIGS. 5 and 6 were run at 74 revolutions per minute under a weight of 30 to 55,000 pounds in the Blinebry Field of Lea County, N. M., through a section known for being extremely hard on gage wear. The bit of the invention, using a gage hardfacing of *sintered* tungsten carbide, drilled 311 feet of limestone, anhydrite and chert in 20 hours. At that time it was pulled from the hole and had the appearance shown in FIG. 5. Gage wear was measured by a ring gage, a steel ring having a 7⅞ inch inside diameter. The gage was held tight on the gae surfaces 20 of two cutters, but it could not be slipped over the third. It was estimated that the bit was 1/64 inch over gauge, and it was evident that there has been substantially no wear of the hardfacing.

The bit hardfaced with *cast* tungsten carbide followed the bit of the invention in the hole, and drilled 383 feet of limestone and anhydrite in 20½ hours, at which time it appeared as in FIG. 6. Using the same ring gage and measuring technique as for the bit of the invention, the bit was found to be 1/4th inch under gage. The extreme gage wear can be seen on FIG. 6 by noting that relief slots 16 have virtually disappeared and that the backs of heel teeth 14 on each side of a slot have actually bridged the slot. In the bit of FIG. 5, on the other hand, slots 16 are still well defined and hardfacing pads 20 are still sharp and well separated from each other. (Note that the differences in wear of the bottom cutting teeth 12, despite their complete identity as manufactured, may be accounted for by the lack of chert stringers in the formation cut by the FIG. 6 bit. Chert is one of the most abrasive and well consolidated rocks known.)

Summary Examples

Granules of sintered monotungsten carbide having the binder compositions set forth in Table I below were prepared by the Whanger process summarized above, the binder fraction of the granules in each instance being about 6 percent by weight (w/o). Such granules are welded to the gage surfaces of "gage cutters" by the tube method described in the complete example above, using a pre-application ratio of 60 w/o WC granules to 40 w/o matrix, a low carbon steel tube, and an oxy-acetylene torch. The tube filler included sufficient ferromanganese and ferromolybdenum powders to furnish a matrix having a pre-application composition of approximately 1.0 w/o manganese, 0.25 w/o molybdenum, balance essentially low carbon steel.

TABLE I

BINDER COMPOSITIONS USED IN FORMING BULK CEMENTED TUNGSTEN CARBIDE

Mix No.	Composition by Weight Percent
176	100 Nickel
177, G47, 226	100 Iron
178, 230	50 Iron, 50 Nickel
179	4 Iron, 70.3 Nickel, 17 Chromium, 4 Silicon, 3.8 Boron, 0.9 Carbon
180	3 Iron, 83 Nickel, 7 Chromium, 4 Silicon, 3.0 Boron, 0.5 max. Carbon
208	92.7 Nickel, 4.5 Silicon, 2.8 Boron
209	70 Nickel, 30 Copper
G48	53.5 Iron, 46.5 Cobalt
227	96 Iron, 4 Nickel
228	85 Iron, 15 Nickel
229	72 Iron, 28 Nickel
231	85 Iron, 15 Cobalt
232	15 Iron, 85 Cobalt
233	50 Nickel, 50 Cobalt
234	75 Nickel, 25 Cobalt
235	25 Nickel, 75 Cobalt

The gage cutters thus hardfaced are bi-frusto conical cutters having the general shape of rolling cone cutters except that they include only the gage portion and the adjoining part of the heel teeth of a complete cutter. They are made especially for laboratory testing on a "boring mill" device, wherein a large block of rock is rotated and the gage cutter is secured in a ram which presses the gage surface against the rock and forces it to cut annular tracks therein. Many tests of this natrue with the same type of rock and with uniform test conditions have established it as a reliable means for predicting the field performance of newer types of gage hardfacings - particularly so because test data on older, field-proven hardfacings have been accumulated over the years and furnish a yardstick to measure the test results on newer hardfacings. The test data consist of (1) weight of hardfacing abraded away in making the standard number of cuts of the revolving rock, (2) percent length of gage hardfacing remaining after the test, in terms of its original length, and (3) a "wear rating" which is a measure of the volume of hardfacing abraded away during the test.

As thus tested and compared with established standards for hardfacings using a 6 percent cobalt binder, all of the binder compositions listed in Table I resulted in gage hardfacings which were at least acceptable, and many of them measured up to typical production values or better. The iron group metals iron and nickel appear to be as good as cobalt, the same is true of the various binary alloys of this group, and there is every reason to believe that the ternary iron group alloys would make equally good substitutes.

Substitution of W_2C

In addition to the above discovery of substitute binders, the present inventors have also found that a portion of the tungsten carbide may be of the ditungsten carbide form, W_2C. Since this form is harder and more abrasive than the WC form, its use could be expected to produce a superior hardfacing, provided it can be secured to the cutter without causing the overall hardfacing to be too brittle. The prior art essentially teaches that a sintered tungsten carbide hardfacing must be 100 percent monotungsten carbide, but the present inventors have discovered that with the proper binder a large fraction of the carbide may be the ditungsten type.

The carbides were formed by mixing powders of tungsten and carbon until an intimate mixture was obtained, and then heating the powders in a hydrogen furnace at about 2,750°F. Each powder mixture was then blended with 6 w/o binder (95 w/o tungsten carbide powder) and ball milled with small carbide pellets in hexane for 48 hours. After ball milling, 1¼ percent soft paraffin was added in more hexane, the mixture was stirred, and excess vehicle removed in a low temperature vacuum oven. The waxed and dried material was then formed into green slugs at a pressure of 4½ tons per square inch, and the slugs were broken and hand screened to S-20 granule size (−0.0661 inch, +0.0331 inch). The granules were then dewaxed in a vacuum oven and sintered in a hydrogen furnace at 2,710–2,730°F.

The sintered granules were chemically analyzed, examined under a microscope, and welded by atomic hydrogen torch to gage cutters by the tube method already described, using 40 w/o matrix to 60 w/o granules and a pre-application matrix composition of about 1.0 w/o manganese, 0.25 w/o molybdenum, balance essentially low carbon steel. Such gage cutters were then tested on the laboratory boring mill by the standard test already described. The general nature of the results is indicated in Table II, together with the granule compositions.

TABLE II

Boring Mill Tests on Gage Hardfacings of Various Granule Compositions

Granule Compositions	Test Results
1. 6 w/o cobalt binder, 94 w/o carbide. Carbide was 68.3 w/o WC, 31.7 w/o W_2C. Mix G-52.	1. Inferior to 6 w/o cobalt binder with all carbide being WC. Superior to prior art hardfacings using cast tungsten carbide (combination WC — W_2C).
2. 6 w/o iron binder, 94 w/o carbide. Carbide was 68.3 w/o WC, 31.7 W_2C. Mix G-53.	2. Superior to both prior art cast tungsten hardfacings and typical production of 6 w/o Co, 94 w/o pure WC. 3. 6 w/o iron binder, 94 w/o carbide. Carbide was 81.1 w/o WC, 18.9 w/o
3. 6 w/o iron binder, 94 w/o carbide. Carbide was 81.1 w/o WC, 18.9 w/o W_2C. Mix G-55.	3. About same as "2" above, superior to both prior art cast tungsten hardfacings and typical production of 6 w/o Co, 94 w/o pure WC.
4. 6 w/o iron binder, 94 w/o carbide. Carbide was 89.9 w/o WC, 10.1 w/o W_2C. Mix G-56.	4. Superior to results in "2" and "3" above, approaching close to best production run using 6 w/o Co, 94 w/o pure WC.

5. 6 w/o iron binder, 94 w/o carbide. Carbide was 13 w/o WC, 83 w/o W_2C, and 4 w/o free carbon. Mix G-57.	5. Results not as good as for 6 w/o Co, 94 w/o pure WC, about comparable to prior art cast tungsten carbide hardfacings.

These results reflect that it is possible to obtain superior hardfacings when at least a part of the tungsten carbide is ditungsten carbide, and an iron binder is used. The use of an iron binder has the additional advantage of eliminating the problem of obtaining a supply of the sometimes critical cobalt.

It is not intended that the above example should be construed in a limiting sense, as various sintered tungsten carbides may be applied to the gage surfaces of rolling cutters without departing from the spirit of the invention. Various shapes of carbide granules may be used, although it is believed to be better to avoid sharp corners and slivery shapes, and the binder content may vary up to 15 weight percent cobalt or other member of the iron group. Various welding techniques may be used in addition to the oxyacelylene method, e.g., atomic hydrogen. With respect to the matrix, hardfacings using no ferromanganese and ferromolybdenum are satisfactory but not as good as the matrix composition of the example, and more of these powders, e.g., 2.0 percent manganese and 0.5 percent molybdenum, gave a matrix which was generally too hard and brittle, causing a tendency to crumble and disintegrate rapidly. Various other matrix additives may be substituted for the manganese and molybdenum, provided that the resulting matrix is of comparable hardness and toughness, and also provided that the substituted additive is equally effective in preventing dissolution of the tungsten carbide in the matrix.

It may be important that the additives be added to the welding tube as filler flour surrounding the tungsten carbide granules, as attempts to incorporate the same elements in the tube wall itself resulted in hardfacings which were not as satisfactory as those where the elements were added as fillers. The powder surrounding each granule may act as a temporary heat barrier, itself then going into solution with the matrix but in so doing providing a time delay before the granules are surrounded by molten metal. Since by that time the welder will have moved his torch to another area, this time would be quite important.

The hardfacing compositions comprising a mixture of WC and W_2C sintered with an iron group binder, preferably iron itself, have obvious utility in many additional applications - in general wherever effective cutting action, wear resistance, or both, are required.

What is claimed is:

1. In a rolling cutter of a rock bit having a conical gage surface adapted to contact the sidewall of a hole as the cutter rolls over the bottom of such hole, the improvement comprising a hardfacing on said gage surface consisting of sintered tungsten carbide in an alloy steel matrix.

2. An improved gage hardfacing on a rolling cone cutter of a rock bit consisting of granules of sintered tungsten carbide in an alloy steel matrix.

3. An improved gage hardfacing on a rolling cone cutter of a rock bit consisting of granules of sintered tungsten carbide in an alloy steel matrix, said matrix including alloy steel derived from the cutter.

4. An improved gage hardfacing welded on the gage surface of a rolling cutter, consisting of granules of sintered tungsten carbide in an alloy steel matrix, said matrix having a pre-application composition including about 1.0 w/o manganese and 0.25 w/o molybdenum.

5. An improved gage hardfacing on a rolling cutter consisting of sintered tungsten carbide granules in an alloy steel matrix, said sintered tungsten carbide comprising a mixture of monotungsten carbide and ditungsten carbide.

6. An improved gage hardfacing on a rolling cone cutter consisting of sintered monotungsten carbide granules in an alloy steel matrix.

7. The improved gage hardfacing of claim **6** in which the binder for said granules includes at least one iron group metal.

8. The improved gage hardfacing of claim **7** in which said binder is cobalt.

9. The improved gage hardfacing of claim **7** in which said binder is iron.

10. The improved gage hardfacing of claim **7** in which said binder is nickel.

11. The improved gage hardfacing of claim **6** in which the binder for said granules includes at least two iron group metals.

12. The improved gage hardfacing of claim **6** in which the binder for said granules is metallic and includes at least one iron group metal.

13. An improved gage hardfacing of claim **6** in which the binder for said granules consists of at least two metals, one of said metals being an iron group metal.

14. An improved gage hardfacing on rolling cone cutters, said hardfacing being a weldment of sintered tungsten carbide granules dispersed in an alloy steel matrix, said granules comprising a mixture of monotungsten carbide and ditungsten carbide grains cemented together with a metallic binder including iron.

* * * * *