Jan. 5, 1965 A. A. MOLITOR 3,164,733

ROTARY SOLENOID

Filed Sept. 4, 1962 3 Sheets-Sheet 1

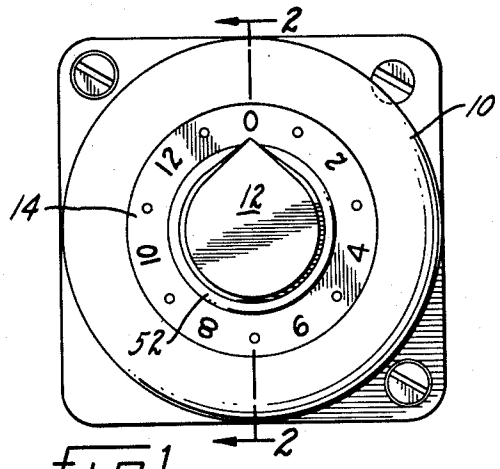

Fig. 1.

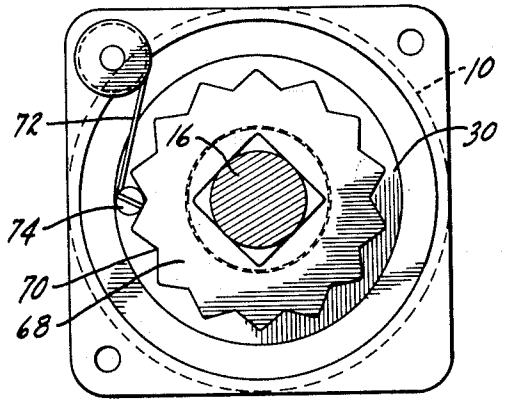

Fig. 3.

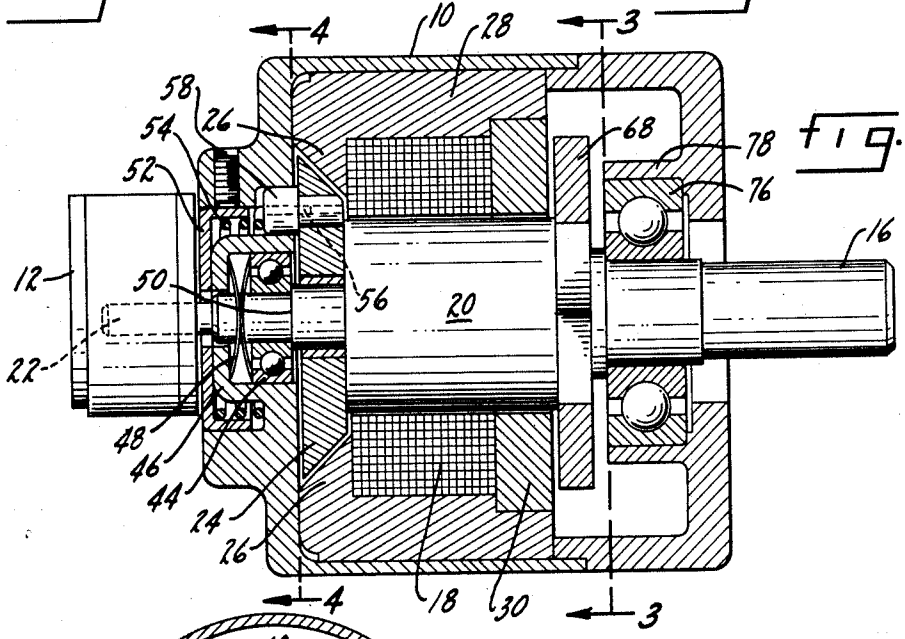

Fig. 2.

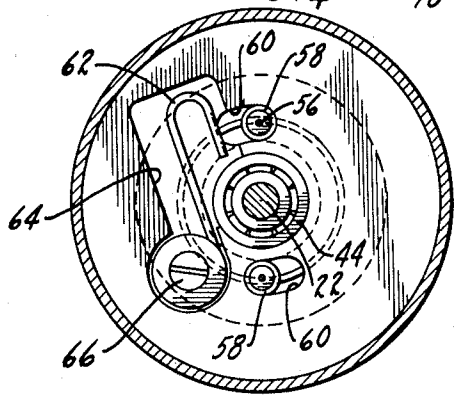

Fig. 4.

INVENTOR.
Arvid A. Molitor,
BY Parker & Carter
Attorneys.

Jan. 5, 1965 A. A. MOLITOR 3,164,733

ROTARY SOLENOID

Filed Sept. 4, 1962 3 Sheets-Sheet 2

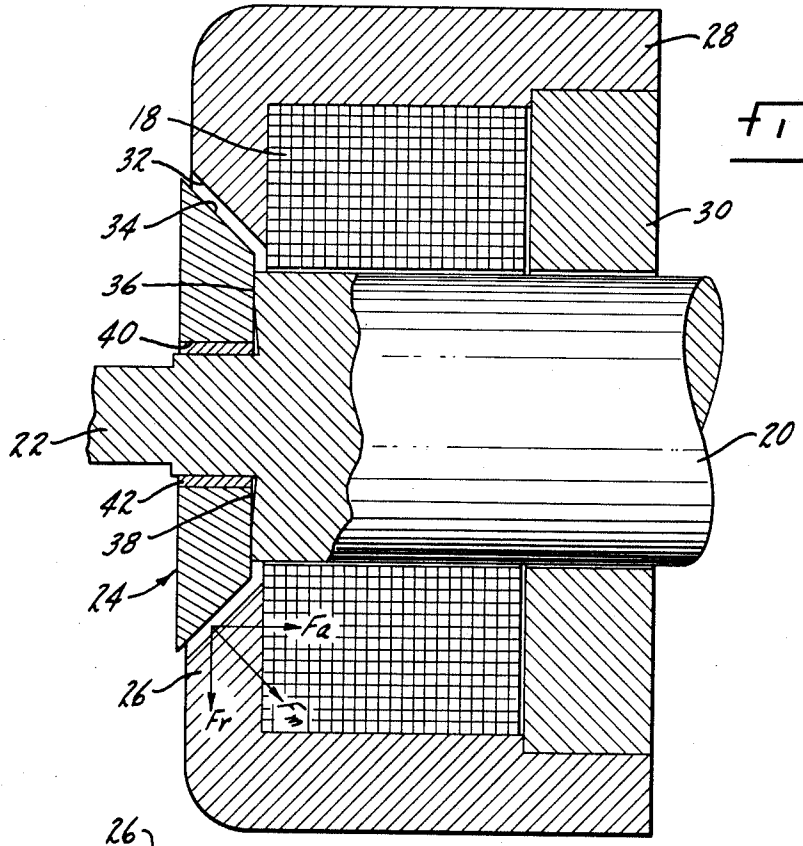

Fig. 5.

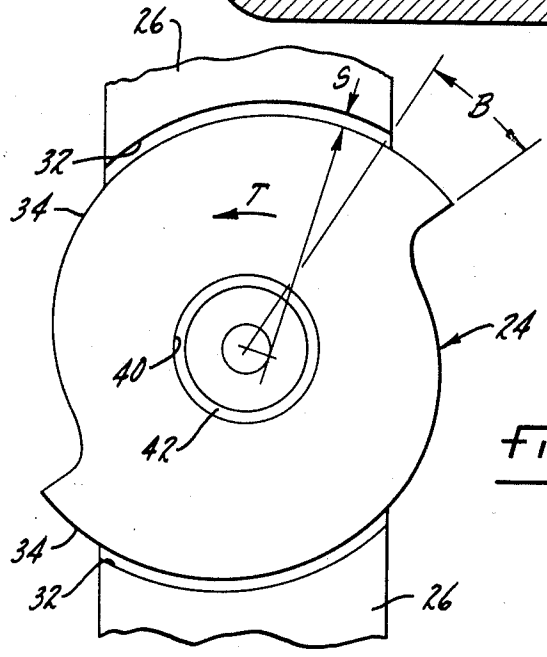

Fig. 6.

INVENTOR.
Arvid A. Molitor,
BY Parker & Carter
Attorneys.

Jan. 5, 1965 A. A. MOLITOR 3,164,733

ROTARY SOLENOID

Filed Sept. 4, 1962 3 Sheets-Sheet 3

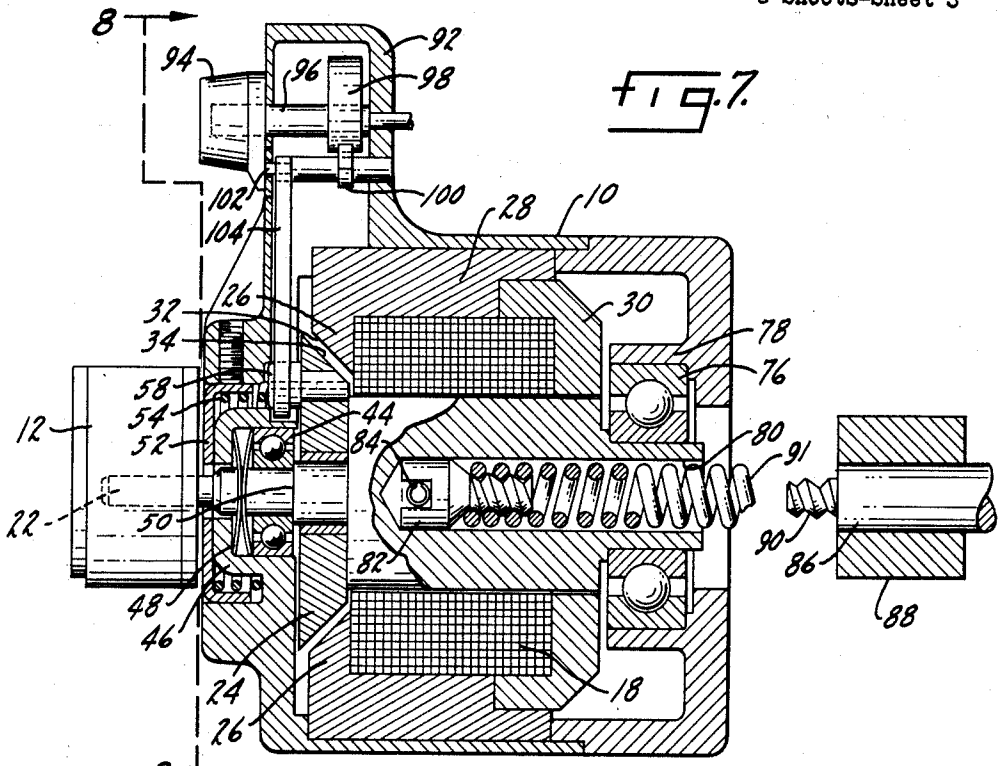

Fig. 7.

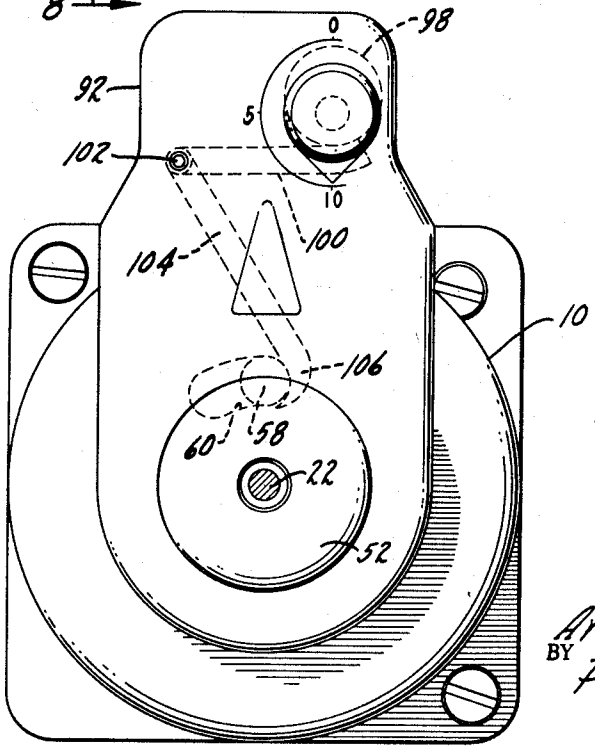

Fig. 8.

INVENTOR.
Arvid A. Molitor,
BY Parker & Carter
Attorneys.

United States Patent Office 3,164,733 Patented Jan. 5, 1965

3,164,733

ROTARY SOLENOID

Arvid A. Molitor, 1136 Morningside Drive, Elgin, Ill.

Filed Sept. 4, 1962, Ser. No. 221,226
4 Claims. (Cl. 310—37)

This invention relates to a rotary solenoid having particular application in the field of stepping motors.

A primary purpose of the invention is a stepping-type rotary solenoid in which a single coil provides the turning power for the solenoid and the magnetic force for operating the clutch.

Another purpose is a rotary stepping motor of the type described having a torsion spring coupling to provide a fast-acting switch.

Another purpose is a rotary solenoid of the type described in which the opposing faces of the armature and pole pieces are conical, and parallel.

Another purpose is to provide a rotary stepping switch of the type described in which the turning torque at the output shaft under service conditions approaches as closely as possible a general constant from the beginning of the stroke to the end of the stroke.

Another purpose is a rotary solenoid which will withstand shocks or vibration in any direction.

Other purposes will appear in the ensuing specification, drawings and claims.

The invention is illustrated diagrammatically in the following drawings wherein:

FIGURE 1 is a left-end view of the solenoid,

FIGURE 2 is a section along plane 2—2 of FIGURE 1,

FIGURE 3 is a section along plane 3—3 of FIGURE 2,

FIGURE 4 is a section along plane 4—4 of FIGURE 2, with parts removed,

FIGURE 5 is an enlarged axial section illustrating the armature, core and pole pieces,

FIGURE 6 is a left-end view of FIGURE 5,

FIGURE 7 is an axial section similar to FIGURE 2 of a modified form of solenoid, and

FIGURE 8 is a view in part section along plane 8—8 of FIGURE 7.

A housing indicated generally at **10** may mount a suitable indicating knob **12** at one end along with a position indicating plate **14**. The opposite end of the housing **10** may mount an output shaft **16**.

Within the housing **10** is an annular coil **18**, used to provide the rotary and clutching magnetic force. Within the coil **18** is a rotatable core member **20**, generally cylindrical in shape, and having a shaft **22** extending outwardly from the left-hand end, as illustrated in FIGURE 2. The indicating knob **12** may be attached to the outside end of the shaft **22**. Concentric with the shaft **22** and adjacent the core **20** is an armature **24** illustrated in detail in FIGURES 5 and 6. In radial alignment with the armature **24** and concentric with it are a pair of pole pieces **26** which are part of an annular frame member indicated generally at **28**. As illustrated in FIGURE 2, the frame member encloses the coil **18**. The magnetic circuit through the frame member, pole pieces and armature is completed by a back frame plate **30**, with all of the above listed members being formed of a suitable magnetic material.

Turning to FIGURES 5 and 6, the opposing faces of the pole pieces and armature are spiral shaped. They are always parallel to each other, regardless of the particular angular position of the armature relative to the pole pieces, so that the magnetic lines of force between the armature and the pole pieces will always be normal or perpendicular to both the armature and the pole pieces. In this way, the magnetic force of attraction is stronger for the same size air gap and the same cross sectional area of pole piece and armature face. As shown herein there are two spiral

surfaces, on the armature, which is symmetrical, and each of the spiral surfaces on the armature are in opposition to a like spiral surface on a pole piece. The spiral surfaces on the armature and the pole pieces preferably all have the same lead.

When the armature rotates through an angle B, as described hereinafter, it will move toward contact with the pole pieces. Preferably the armature will be stopped before there is actual contact. In any event, the armature will rotate toward the pole pieces and the air gap S will be shortened or reduced in size as the armature moves.

As illustrated particularly in FIGURE 5, the spiral surfaces **32** of the pole pieces and the spiral surfaces **34** of the armature are conical with the surfaces being slanted inwardly toward the core. In this way it is possible to develop an axial component of magnetic force as well as a radial component of magnetic force. By forming the opposing surfaces of the pole piece and armature in the shape of a cone, the opposing cross sectional areas of the pole pieces and armature are increased. Accordingly, the force component Fm normal to these surfaces, the surfaces always being parallel, will be larger because of the larger cross sectional area. This force component has a radial component Fr, and an axial component Fa. The radial component may be the same in magnitude as the axial component depending upon the angle of the surfaces **32** and **34**.

The axial component of force is useful to operate the clutch. The core **20** has a face **36**, which may be slightly cut back toward the center, as at **38**, which is in opposition to the inner annular surface of the armature. When the coil is energized, the armature will move in a rotary direction T due to the radial component of force. At the same time the armature will move sufficiently so that there is firm contact between the armature and core. Accordingly, the core will rotate with the armature. The inside surface of the armature, **40**, may mount a suitable bearing sleeve **42** so that the armature may rotate freely about the shaft **22** extending outwardly from the core on its return stroke.

Considering FIGURE 2, the core shaft **22** may be mounted in a bearing **44**, with the bearing in turn being held in position in a portion of the housing **10** indicated at **46**. A pair of washer-like springs **48** may be used to bias the bearing against a shoulder **50** on the shaft **22**. Outside of the housing portion **46** is a cap **52** within which is mounted a coil spring **54** having a portion **56** which normally biases or urges the armature in a direction opposite that to which it moves by the magnetic force.

Considering FIGURE 4, the armature **24** may have a plurality, for example two, outwardly extending pins or projections **58** which move in slots **60** in that portion of the housing immediately adjacent the armature. The circumferential extent of the slots **60** determines the angular movement of the armature. A spring stop **62** may be mounted in a slot **64** in the end of the housing and may be positioned to stop the armature just prior to the end of its movement set by the length of the slots **60**. A screw or the like **66** holds the spring stop **62** in position.

Fixed to the output shaft **16** and to the core **20** may be a detent wheel **68** having a series of notches **70**. A detent including a spring **72** mounting a button or the like **74** is suitably fastened to the main housing. The detent is effective to hold the detent wheel, core and output shaft in a stationary position until there is sufficient turning force from the armature to overcome the load of a snap action switch and then move the wheel to the next position. The number and size of notches **70** will depend upon the steps the motor is to take in rotation. The output shaft **16** may be mounted in a suitable bearing or the like **76** which in turn is mounted in an inward sleeve extension **78** of the housing **10**.

Considering FIGURES 7 and 8, those parts corresponding to the parts in FIGURES 1–4 have been given the same numbers. The core may have an axial bore 80 with a threaded spring terminal 82 at its inward end. The spring terminal may be pinned, as at 84, to the core. In alignment with the bore 80 in the core is an output shaft 86, the outer end of which has a cam 88. The inner end of the outward shaft 86, or the end toward the solenoid, has a threaded spring terminal 90. A suitable coil spring 91 may be mounted within the bore 80 and positioned on the spring terminals 82 and 90. In operation, as the core turns with the armature, the spring will be wound up and after it has been tensioned a sufficient amount, it will snap the output shaft and cam from one position to the next. The cam may be positioned within a concentric arrangement of switches or some other similar type of load. Movement of the armature and core will rotate the cam so that it operates each of the desired loads in succession.

In some applications it is advantageous to adjust the return stroke of the armature. For example, the speed of the output shaft may be adjusted. The housing 10, as shown in FIGURES 7 and 8, may have a housing extension 92 along one side. A manual speed control knob 94 may be mounted on a shaft 96, the shaft 96 mounting a cam 98 within the housing 92. The cam 98 may bear against a lever 100 which is fixed to a rotatable pin 102, also journaled in the housing 92. A second lever 104 is fixed to the pin 102 and has an outer somewhat curved end 106 which is adapted to bear against and move the head of the pin 58 extending outwardly from the armature. The knob 94 is effective to control the characteristics of the stroke of the armature through the structure described above. Since the pulses can be timed equally, the net result is speed control of the output shaft. The invention should not be limited to this precise arrangement for varying the return stroke, as many other structural arrangements will be equally satisfactory.

The use, operation and function of the invention are as follows:

Considering a stepping motor as shown in the drawings, when the coil 18 is activated by a suitable source of electric current, for example pulses or otherwise, there will be a magnetic field formed in the frame members, the armature and the core in such a way that the core, which is normally freely rotatable, will be held to the armature, which is also freely rotatable, and the armature and core will then be rotated in such a manner that the armature moves toward contact with the pole pieces. Normally there will be some means of stopping movement of the armature prior to actual contact with the pole pieces. There will be rotary motion of the armature and some axial motion as it moves into firm contact with the core. The armature and core will move the detent wheel a single step as normally the angular movement of the armature will correspond with one step on the wheel. Once the current in the coil is turned off, the armature will be rotated back to its original position, but the core and output shaft will remain stationary.

Considering FIGURES 7 and 8, the output shaft is attached to the core by the spring 91. As the armature and core move, the spring 91 will be wound up or tensioned. As soon as the tension in the spring combined with the rotary force of the armature is sufficient to overcome the holding force on the cam end of the output shaft, the shaft will be rotated one step in the forward direction. In some applications a detent wheel may be placed on the end of shaft 86 to replace the cam.

Although it is not necessary to use the spring 91, it has been found that faster switching can be provided with the torsion spring coupling 91. If there were no spring, the torque or moving force of the shaft 86 at the beginning of its stroke would be somewhat small and would build up as the armature gets closer to the pole pieces and as the magnetic force of attraction increases. By

using the spring arrangement it is possible to have increased start torque at the output shaft 86. Also, the turning of the output shaft will be much greater. It is the combination of the turning force provided by the armature and the force provided by the spring after it has been wound up by the armature that provides fast action and torque at the output shaft.

Of particular importance is the use of conical or slanted faces on the opposing surfaces of the armature and pole pieces. In this way, it is possible to have an axial component of the magnetic force of attraction without detracting from the radial or turning component. The angle that the conical faces of the armature and pole pieces make with the axis of rotation can vary, although angles from 45 to 60 degrees are preferred with 45 degrees being a very satisfactory angle. The precise angle will be depend upon the amount of axial force necessary to hold the core to the armature and upon the amount of turning force necessary at the output.

The shape of the face of the core which contacts the armature is important. This face may be cut back so that there is only a small area of actual contact between the armature and the core. This is important in order to reduce residual magnetism in the core and to provide a smaller area of sliding contact between these two faces. In operation, the coil spring 54 will rotate the armature back to its original position after both the armature and core have been turned by the magnetic force. The armature moves in both directions, forward and back, and the core moves only in a forward direction.

Of importance is the spiral shape of the opposing faces of the armature and pole pieces. The lines of flux or the magnetic field between the pole pieces and the armature will always be perpendicular to the opposing face of these members and will be tangent to a circle concentric with the axis of rotation. There is therefore a turning force, or moment arm, about the axis of rotation which provides the turning force for the armature. Preferably, the circumferential extent of the pole pieces is kept at a minimum to concentrate the magnetic flux.

The invention should not be limited to a stepping motor, but has equal application to a rotary solenoid with only a back and forth movement.

The stepping motor shown herein may be used in counting pulses, and may be used to actuate a series of devices which are arranged around the output shaft. There are many other applications for the invention, both as a stepping motor and as a rotary solenoid.

The solenoid is not affected by vibrations or shock in any direction. The unit is very compact with all rotating components mounted in bearings.

Whereas the preferred form of the invention has been shown and described herein, it should be realized that there are many modifications, substitutions and alterations thereto, within the scope of the following claims.

I claim:

1. A rotary solenoid including a rotary core and a pair of pole pieces, concentric with the core, and circumferentially spaced, one from the other, an armature positioned between and in general radial alignment with the pole pieces, said armature having spiral-like outer surfaces positioned opposite said pole pieces, said pole pieces each having spiral-like surfaces positioned opposite the spiral-like surfaces on the armature, a magnetic coil positioned to form a magnetic field between the pole pieces and armature and to rotate the armature within the pole pieces with the spiral-like surfaces of the armature moving, in one direction, toward the spiral-like surfaces of both pole pieces, a spring arranged to move said armature in the opposite direction, an output shaft, detent means connected to said output shaft, yielding means holding said detent means and output shaft in a stationary angular position, and means connecting said output shaft to said armature when the coil is energized including a spring member effective between said shaft and core, rotary

movement of said armature and core caused by energizing said coil applying a turning force to said spring member, which turning force overcomes the yielding means holding said detent means after a given rotation of said armature and core.

2. The structure of claim 1 further characterized in that said spring member extends within said core and is fixed to said output shaft.

3. The structure of claim 1 further characterized in that said spring member is fixed to said core.

4. The structure of claim 1 further characterized in that the opposing spiral-like surfaces of the armature and pole pieces are conical.

References Cited by the Examiner

UNITED STATES PATENTS

928,516	7/09	Hellmund	310—36 X
2,460,921	2/49	Candy	317—197 X
2,963,915	12/60	Straub	317—197
2,987,657	6/61	Buchtenkirch et al.	317—192

FOREIGN PATENTS

753,262	8/33	France.

MILTON O. HIRSHFIELD, *Primary Examiner.*

JOHN P. WILDMAN, *Examiner.*