R. G. HARRIS.

FIELD TENT.

APPLICATION FILED FEB. 16, 1916.

1,190,999.

Patented July 11, 1916.

2 SHEETS—SHEET 1.

Fig. 1.

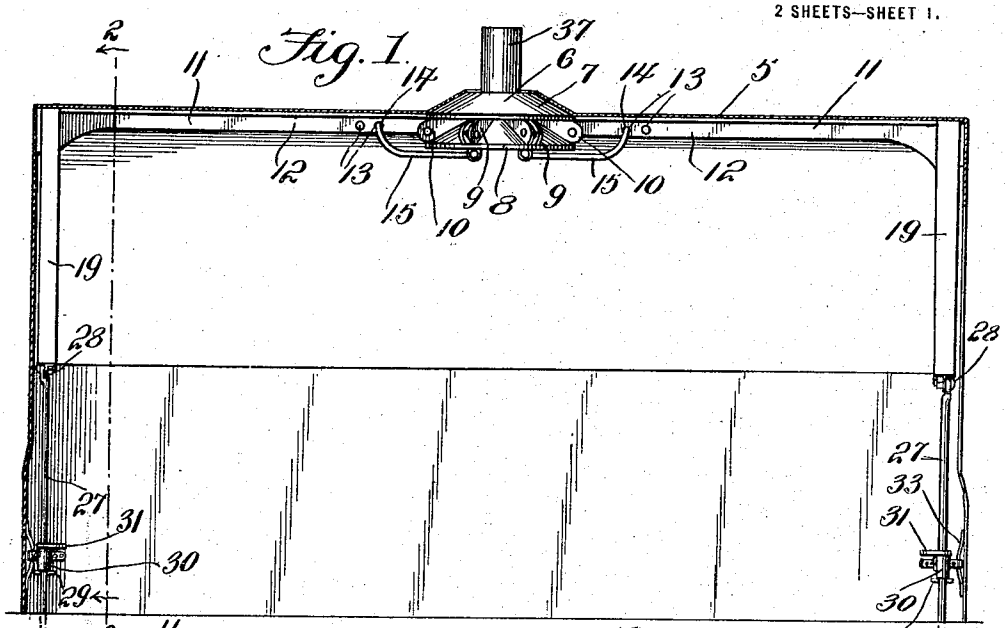

Fig. 9.

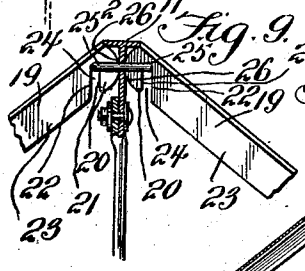

Fig. 2.

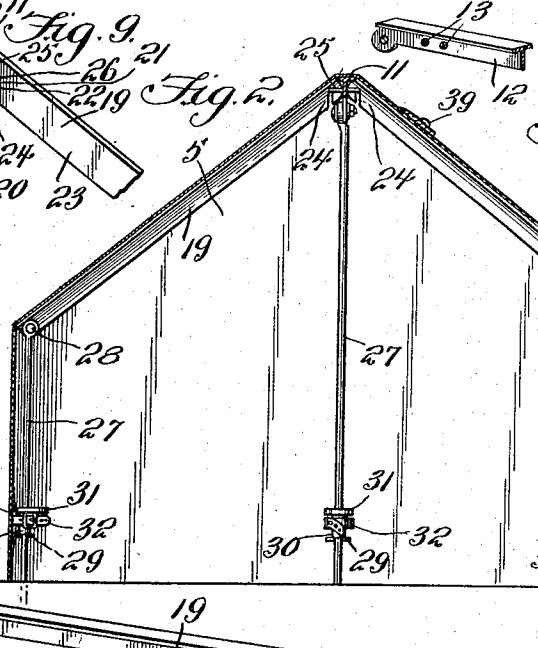

Fig. 6.

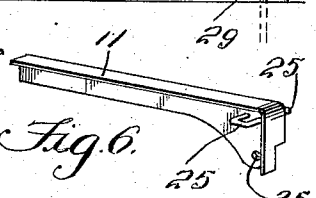

Fig. 7.

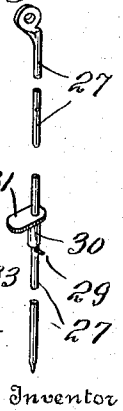

Fig. 8.

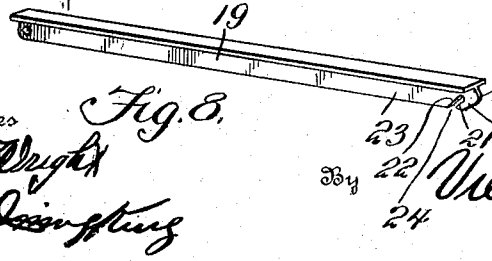

Witnesses

J. T. L. Wright

J. L. Jennings

Inventor

R. G. Harris

By Victor J. Evans

Attorney

THE NORRIS PETERS CO., PHOTO-LITHO., WASHINGTON, D. C.

R. G. HARRIS.

FIELD TENT.

APPLICATION FILED FEB. 16, 1916.

1,190,999. Patented July 11, 1916.

2 SHEETS—SHEET 2.

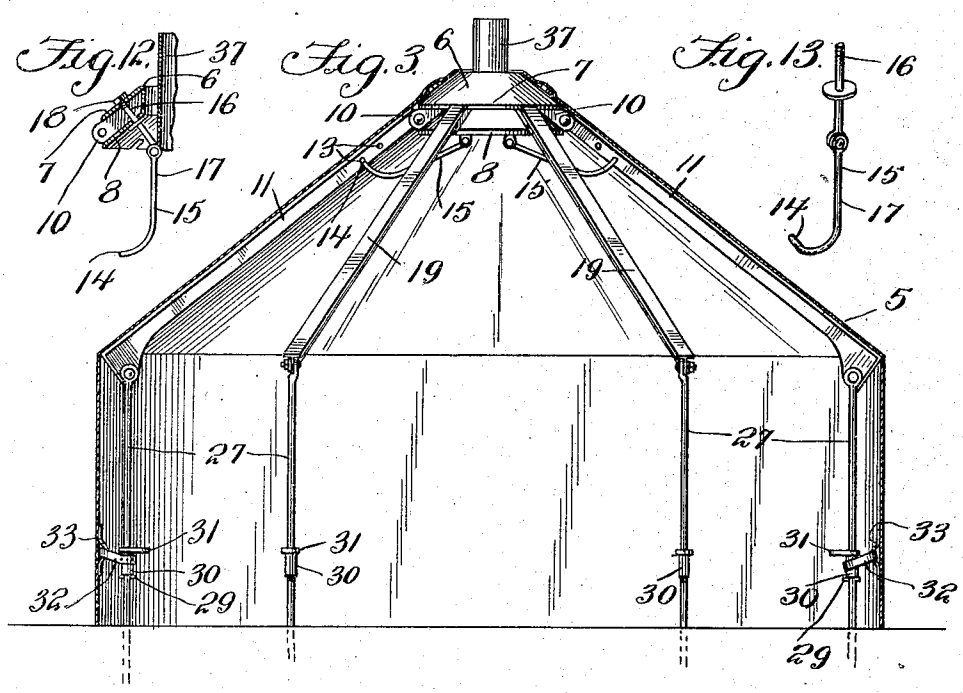

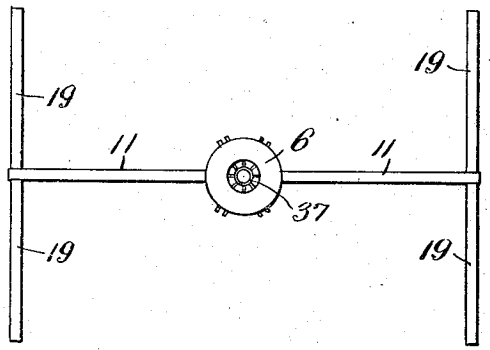

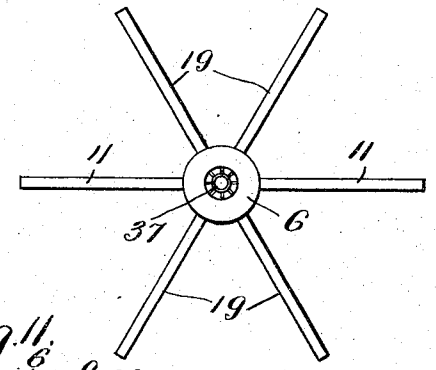

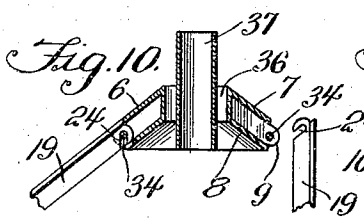

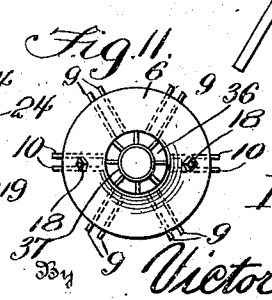

Witnesses

J. T. L. Wright

J. S. Irving King

Inventor

R. G. Harris

By Victor J. Evans

Attorney

THE NORRIS PETERS CO., PHOTO-LITHO., WASHINGTON, D. C.

UNITED STATES PATENT OFFICE.

RICHARD G. HARRIS, OF KNOXVILLE, TENNESSEE.

FIELD-TENT.

1,190,999. Specification of Letters Patent. Patented July 11, 1916.

Application filed February 16, 1916. Serial No. 78,706.

To all whom it may concern:

Be it known that I, RICHARD G. HARRIS, a citizen of the United States, residing at Knoxville, in the county of Knox and State of Tennessee, have invented new and useful Improvements in Field-Tents, of which the following is a specification.

This invention relates to tents and more particularly to a frame structure therefor.

The primary object of the invention is the provision of a frame structure for tents where the parts constituting the tent structure are so constructed as to permit the construction of tents of two separate and distinct different types, preferably known as the "straight wall type tent" and "Sibley" type tent.

A still further object of the invention is the provision of a frame structure for tents constituting a sectional ridge pole, certain of the sections constituting the ridge pole having a pivotal connection with the cap and arranged in a line to one another, and means for sustaining the latter mentioned section of the ridge pole in supporting relation with respect to the cap.

With the above and other objects in view, the invention consists in the novel features, details of construction and combination of parts which will hereinafter be more fully set forth, illustrated in the accompanying drawing and pointed out in the claims appended thereto.

Figure 1 is a longitudinal section taken through the tent canvas with the frame structure shown in side elevation and illustrating the construction of one type of tent. Fig. 2 is a section on the line 2—2 of Fig. 1. Fig. 3 is a longitudinal section taken through the tent canvas showing the frame structure in end elevation and illustrating the arrangement of the frame structure to provide a different type of tent than that shown in Fig. 1. Fig. 4 is a top plan view of the type of tent shown in Fig. 1, with the canvas removed therefrom. Fig. 5 is a top plan view of the type of tent shown in Fig. 3 of the drawing with the canvas removed therefrom. Fig. 6 is a perspective view of one of the inner sections of the ridge pole. Fig. 7 is a perspective view of the tent pin. Fig. 8 is a perspective view of one of the outer ridge pole sections. Fig. 9 is a transverse section illustrating the manner of connection of the outer ridge pole sections to the inner ridge pole sections. Fig. 10 is a detail section illustrating the manner of connection of the outer ridge pole sections with the cap when the type of tent is constructed as that shown in Fig. 3 of the drawing. Fig. 11 is a plan view of the cap. Fig. 12 is a detail vertical section taken through the cap illustrating the brace hooks connected therewith. Fig. 13 is a perspective view of the brace hooks removed from said cap.

Referring more particularly to the accompanying drawing and to the specific type of tent as disclosed in Fig. 1 of the drawing, it is to be stated that this type of tent is commonly known as a straight wall type and in this particular instance embodies a canvas covering. This canvas covering 5 is erected and supported upon a frame structure consisting of a centrally located cap 6 of substantially frusto-conical form and constructed of a pair of superposed conical formed upper and lower disks designated by the reference characters 7 and 8 respectively. These disks are supported in spaced relation one to the other through the medium of a plurality of concentrically arranged spaced ears 9 and 10. The ears 10 are disposed at substantially diametrically opposite points with respect to the cap portion 6 and have connected therewith at all times a pair of alined inner ridge pole sections 11. These ridge pole sections are of substantially T-formation and the vertical portion 12 thereof is provided with a series of longitudinally disposed openings 13 for receiving the hooked end 14 of a brace 15. This brace 15 embodies a threaded shank portion 16 having pivotal connection with the shank portion 17 of the hooked end of the brace and the said shank portion 16 is extended on an angle through the respective disks 7 and 8, as better shown in Fig. 12 of the drawing, and permanently secured to the cap through the medium of a nut 18. The frame structure disclosed in the drawing further embodies outer ridge pole sections 19 which are of T-formation and formed at their innermost ends with a hook 20 having its inner face 21 arranged at an angle to and in spaced relation with the free end 22 of the vertical portion 23 of said outermost ridge pole section, whereby defining a tangentially arranged slot 24. When it is desirous to construct the type of

tent as that disclosed in Fig. 1 of the drawing these outer ridge pole sections are connected with the U-shaped hangers 25 formed on the free end of the innermost ridge pole sections 11 and extending in opposite directions and at an angle thereto, or in other words the slot 24 of the outer ridge pole sections is engaged with the hangers 25 and the convexed portion 26 of the hook binds against the opposed outer surface of the vertical portion 12 of the inner ridge pole section 11, whereby the outer ridge pole sections are sustained in substantially a downward and outward inclined direction with respect to the innermost section of the ridge pole and at right angles thereto. The outer ridge pole sections 19 have pivotally connected to their lower ends tent pins 27 which are pivotally connected thereto through the medium of a pivotal pin 28. These tent pins have adjustably mounted thereon and retained thereto through the medium of a cross pin 29 a sleeve 30 formed at its upper end with a right angular projection 31 and the purpose of the right angular projection 31 is to permit of the driving of the tent pins within the ground when the erection of the tent is being performed. Embracing the sleeves 30 are straps 32 connected with loops 33 to the tent whereby the portion of the canvas of the tent forming the walls thereof are held tightly against any movement, or in other words, the walls of the tent are prevented from allowing the entrance of air therein or the opening of the tent by unauthorized persons.

Referring now more particularly to the type of tent as that shown in Fig. 3 of the drawing, and when it is desired to so construct this type of tent the pairs of outer sections are detached from the hangers 25 of the inner ridge pole sections and the slot 24 thereof is engaged over the cross pins 34 of the ears 9 of said cap 6 and are arranged at an angle with respect to the cap 6 and in spaced concentric relation with respect to the adjusted position of the inner ridge pole sections 11. In other words when the latter referred to type of tent is constructed and the pairs of outer sections 19 of the ridge pole are detachably connected with the pins 34 of the ears 9 of the cap, the convexed portion 26 of the hook 20 will bind against the marginal edges of the disk 7 of the cap and positively retain the said outer sections at the desired angle required for the construction of this type of tent, in the meantime the hooked ends 14 are removed from one of the apertures 13 of the vertical portion 12 of the inner ridge pole and inserted in the other aperture thereof, whereby the inner sections of the ridge pole are retained in a line with the outer ridge pole sections 19. Of course, it is obvious from Fig. 3 of the drawing that when the "Sibley" type of tent is constructed that additional tent pins are employed and such tent pins are connected with the aperture 35 of the inner ridge pole section 11 for firmly holding the latter referred to sections in supported relation and enabling such sections as well as the sections 19 to support the canvas 5.

Passing upwardly from the central opening of the cap is a vent tube 37 which permits of the access of air within the tent to afford a sufficient ventilation to the occupants of the tent.

From the foregoing description, taken in connection with the accompanying drawing, the advantages of construction and of the method of operation will be readily apparent to those skilled in the art to which the invention relates, and while I have described the principles of operation of the invention together with the device which I now consider to be the best embodiment thereof, I desire to have it understood that the device shown is merely illustrative, and that such advantages may be made when desired as are within the scope of the claims appended thereto.

I claim:

1. A supporting frame for tents embodying a cap, ridge poles pivotally connected with said cap, each ridge pole embodying inner members formed at their outer ends with hangers and a pair of outer members detachably connected with the hangers of each of said inner members and supporting the inner members in alinement when the frame supports one type of tent, each pair of outer members having detachable connection with the inner members and connected with the cap when the frame supports a different type of tent.

2. A supporting frame for tents embodying a cap, a series of ridge poles comprising inner and outer sections, said inner sections having pivotal connection with said cap, and the outer sections having detachable connection with the inner section when supporting one type of tent and the outer section having detachable connection with the cap when the frame supports another type of tent.

3. A frame adapted to support the canvas of different types of tents embodying a cap, ridge poles removably and adjustably connected with said cap, each pole constituting inner and outer sections, and a swinging hook member connected with the cap and adapted to interchangeably engage with a series of apertures formed in the innermost ridge pole sections for supporting the latter mentioned sections in constructing different types of tents.

4. A supporting frame for tents embodying a cap, ridge poles connected therewith, each ridge pole embodying inner members

formed at their outer ends with hangers, a pair of outer members each formed with a hooked end having a convexed portion, the hooked ends of said outer members detachably engaging with the hangers of said inner members and disposing the convexed portion thereof in contact with said inner members when supporting one type of tent, the hooked ends of said outer section having connection with the cap when the frame supports another type of tent.

In testimony whereof I affix my signature in presence of two witnesses.

RICHARD G. HARRIS.

Witnesses:
T. W. FIELDS,
JOHN V. WICE.

Copies of this patent may be obtained for five cents each, by addressing the "Commissioner of Patents, Washington, D. C."