Sept. 3, 1935. H. HERMANI 2,013,051

ROUND CORNERED BOX WITH TRAY INSERT

Filed March 9, 1935

Fig. 1.

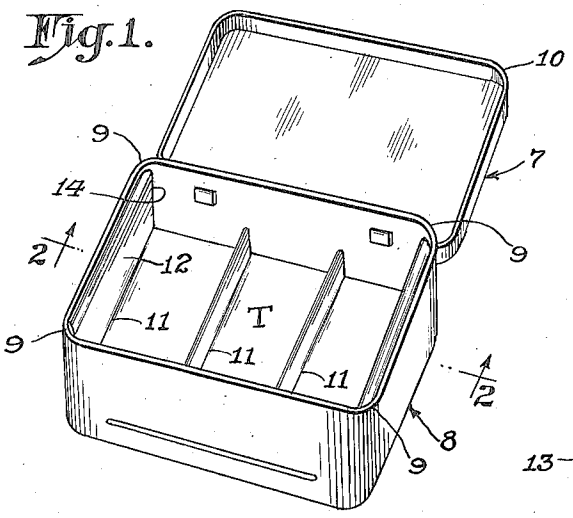

Fig. 2.

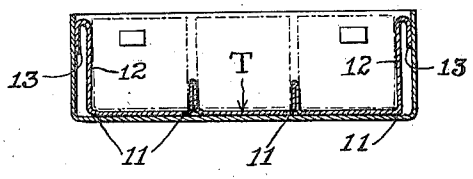

Fig. 3.

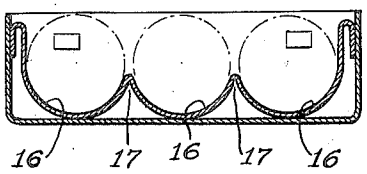

Fig. 4.

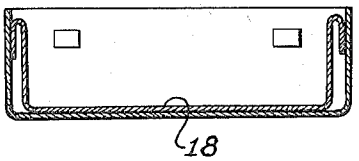

Fig. 5.

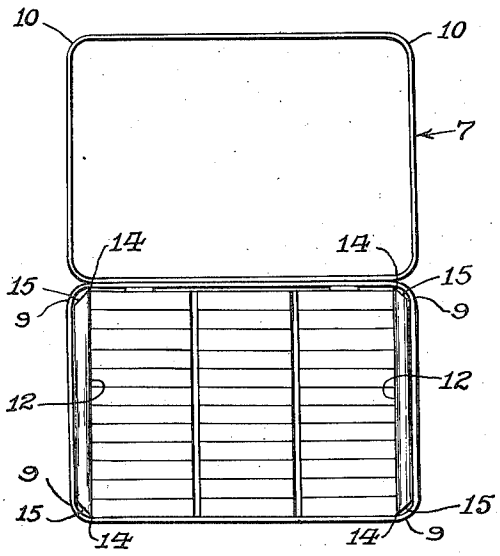

Fig. 6.

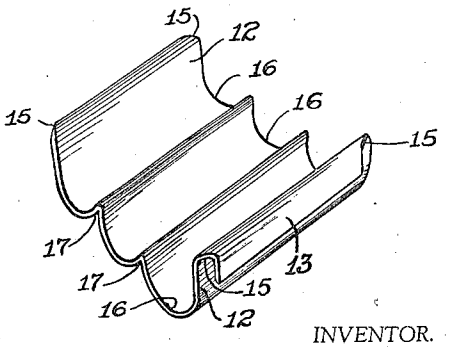

INVENTOR.
HENRY HERMANI

BY J. Lawrence Meyers

ATTORNEY.

Patented Sept. 3, 1935 2,013,051

UNITED STATES PATENT OFFICE

2,013,051

ROUND CORNERED BOX WITH TRAY INSERT

Henry Hermani, Baltimore, Md., assignor to The Tin Decorating Company of Baltimore, Baltimore, Md., a corporation of New Jersey

Application March 9, 1935, Serial No. 10,292

8 Claims. (Cl. 206—42)

My present invention relates to improvements in receptacles or boxes and especially, though not exclusively, to metallic receptacles or boxes such as commonly used for packaging medicinal tablets or the like, and wherein the body of the receptacle is provided with rounded or curved corners.

Prior to my invention, in packaging medicinal tablets or equivalent articles, it has been the general practice to stack the tablets or articles in vertical piles, each pile containing a limited number of tablets or articles according to the thickness thereof, and the depth of the container or box. This method of packaging tablets or similar articles entails the objection of limited capacity, that is, the area of the receptacle is not completely utilized for the storage of a maximum number of tablets or similar articles. While this objection does not particularly obtain in the case of square cornered receptacles, it does in the case of round cornered receptacles, because the latter do not permit the insertion of the tablets on edge and in parallel rows across the receptacle, due to the fact that the rounded corners prevent alining of the tablets when arranged on edge, as will become hereinafter more apparent.

While it is possible to arrange tablets or similar articles on edge and in parallel rows across containers of the square cornered type, there is a serious objection in connection with such containers, principally in connection with metallic containers, because the provision of the square corners requires a seaming operation, during which the decoration on the blanks from which the boxes are formed, is mutilated by the dies, or sharp undecorated edges are exposed after the seaming operations. An illustration of this may be seen in Patent No. 948,122, showing a sheet metal box having square corners provided by a seaming operation. It is, therefore, most desirable to have round cornered containers produced by a drawing operation, and presenting a smooth surface all around the box or container so that the same may be attractively and uniformly decorated.

With the foregoing in mind, the principal general object of my invention is to provide what may be termed an "adapter", in the nature of an insert somewhat similar to a tray, which is cheap and easy to manufacture, applied with facility, and which adapts the interior of a round cornered receptacle of the character mentioned, to the reception of rows of tablets or similar articles standing on edge.

The foregoing object is accomplished, as hereinafter pointed out in detail, by providing the insert of such a nature as to compensate for the rounded corners of the receptacle and to provide parallel channels, each adapted to maintain the tablets or similar articles in parallel rows, and providing in connection with opposite walls of the receptacle adjacent the rounded corners thereof, right-angled corners.

The foregoing and all of the objects and advantages of the invention will become more apparent and will be pointed out during the course of the following detailed description of the accompanying drawing, in which,—

Fig. 1 is a perspective view of a box or container of the round cornered type, with the cover opened and showing one form of tray or adapter embodying my invention inserted within the body of the receptacle;

Fig. 2 is a longitudinal sectional view taken on the line 2—2 of Fig. 1, and illustrating in dot and dash lines tablets or similar articles arranged within the receptacles;

Fig. 3 is a view similar to Fig. 2, showing a slight modification of the invention, in that the channels of the tray or adapter are curved instead of squared;

Fig. 4 is a view similar to Figs. 2 and 3, showing a tray or adapter embodying the invention, but devoid of channel formation;

Fig. 5 is a top plan view of a receptacle such as shown in Fig. 1, having therein an adapter or tray constructed in accordance with any of the embodiments of the invention and showing tablets arranged on edge and in straight parallel rows therewithin; and

Fig. 6 is a perspective view of the tray or adapter shown in Fig. 3, that is, with the curved channels.

Referring to Figs. 1 and 2, the numeral 7 designates generally the lid or cover of the receptacle, the body of which is designated generally by the numeral 8, and which has the rounded corners 9. Of course the lid or cover 7 may be hinged to the body 8, or may be of the slip-cover type, and as shown, has a marginal flange also provided with rounded corners 10 to fit over the corners 9 of the body 8. Obviously, the receptacle embodying the body 8 and cover 9 with the rounded corners 9 and 10 might well receive tablets or similar articles arranged in stacks or piles in usual manner, that is, one tablet disposed on the other, but such manner of packaging does not fully utilize the capacity of the container. Therefore, in order to fully utilize the area of the container or box by arranging tablets or similar articles therein in parallel rows, and on edge, I provide a

tray T which frictionally fits within the body 8.

The tray or adapter T constructed in accordance with my invention is generally of U-shape, and is preferably slightly longer than the inner longitudinal dimension of the box, so that a good frictional fit will be obtained to maintain the tray in place when opening and closing the lid. As will be noted, the tray or adapter T is preferably constructed of a single sheet of metal, which, in Figs. 1 and 2, is shown crimped as indicated at 11, to form upstanding ribs spaced from each other and from the end walls 12 to provide square channels to receive the tablets. The upper ends of the walls 12 are curved outwardly and downwardly, providing flanges 13, which frictionally engage against the inner faces of the end walls of the body 8. The amount or extent of curvature of the walls 12 at their top, that is, the distance between the flanges 13 and the end walls 12, corresponds substantially to the curvature of the rounded corners 9 of the body. In other words, the extent or amount of curvature of the upper ends of the walls 12 of the tray or adapter depends on the size of the containers and the curvature of the rounded corners so that, as shown in Fig. 1, the ends of the walls 12 will form with the front and back walls of the body 8 right-angles, as indicated at 14. Also as shown in Figs. 1, 5 and 6, the upper corners of the tray or adapter are beveled or cut away as at 15, to an extent or an amount determined by the curvature of the corners 9, so that the tray will snugly and neatly fit within the body 8, almost as an integral part thereof, and not only presenting a neat appearance, but facilitating insertion of the trays to form square corners 14 between the walls 12 and the front and back walls of the body 8.

In the embodiment of the invention shown in Figs. 1 and 2, the channels formed by the walls 12 and ribs 11 have flat bottoms especially adapted to receive square or angular tablets. However, this is not essential to the practice of the invention because, as shown in Fig. 3, the bottom of the tray may be formed with curved channels 16 provided by bending the material forming the bottom upwardly to form curved ribs 17 and curved channels. Otherwise, the construction, character and use of the tray shown in Fig. 3 is the same as that of Figs. 1 and 2, but is especially adapted and constructed to receive circular tablets.

As previously mentioned, the tray shown in Fig. 6 is the same as that shown in Fig. 3, and it will be noted that the flanges 13 are of less width than the bottom or body of the tray proper, due to the fact that the upper corners are beveled or cut away, as previously explained and for the reason given.

In Fig. 4 is shown a further modification wherein the tray has no channels but merely a flat bottom 18 on which any type or shape of tablets may be arranged on edge and in rows, as in the case of an ordinary square cornered receptacle or box. This is due to the fact that the tray has the same characteristics, except for the lack of the ribs defining channels on the bottom, as the trays of Figs. 1–3. In other words, under all forms of the invention the trays have their upper corners beveled or cut away according or corresponding to the curvature of the corners of the receptacle to neatly and snugly fit therein, and are provided with flanges 13 spaced from the walls 12 a distance to compensate for the curvature of the corners of the receptacle to provide the formation of right angles between the walls 12 and the front and back walls of the receptacles, so that tablets of any shape and character may be arranged in straight and parallel rows within the receptacles, as shown in Fig. 5.

It should be obvious from the foregoing that my invention affords the use of boxes having corners rounded interiorly and exteriorly, which may be neatly and attractively decorated, to contain tablets or the like arranged on edge in straight parallel rows, by providing an insert which slightly shortens one interior dimension of the boxes while making the interior of the box rectangular, that is, with right angled corners facilitating insertion of the tablets on edge in straight rows. Furthermore, no separate means is necessary to maintain the inserts or false bottoms in place.

I claim:—

1. A receptacle for the purpose described comprising, a body having rounded or curved corners at the junction of its side and end walls, a tray-like member in said body having at opposite ends thereof upstanding walls connected at their tops to depending flanges, said walls and flanges being spaced apart a distance corresponding substantially to the curvature of the corners of the body, and the upper corners of the tray being cut away or beveled to fit across the curved corners of the box with said flanges engaging opposite walls of the body and the upstanding walls of the tray forming substantially right angles with other opposite walls of the containers.

2. A receptacle for the purpose described comprising, a body having rounded corners at the junctions of its side and end walls, a tray-like member in said body having at opposite ends thereof upstanding walls connected at their tops to depending flanges, said walls and flanges being spaced apart a distance corresponding substantially to the curvature of the corners of the body, and the upper corners of the tray being cut away or beveled to fit across the curved corners of the box with said flanges engaging opposite walls of the body and the upstanding walls of the tray forming substantially right angles with other opposite walls of the containers, said tray being formed of resilient material and of greater length than the container whereby when it is inserted said flanges frictionally engage said first opposite walls to hold the tray in place within the receptacle.

3. A sheet metal receptacle of the character described comprising, a body drawn up from a blank and having curved or rounded corners connecting the side walls thereof, a tray-like member in said body and having upstanding walls at opposite sides or ends thereof, said upstanding walls being bent outwardly and downwardly to form depending flanges, the ends of said flanges being cut away or beveled to fit across said rounded corners of the body, and said tray being of dimensions substantially corresponding to the inner dimensions of the body whereby said flanges will engage opposite walls of the body to hold it therein.

4. A sheet metal receptacle of the character described comprising, a body drawn up from a blank and having curved or rounded corners connecting the side walls thereof, a tray-like member in said body and having upstanding walls at opposite sides or ends thereof, said upstanding walls being bent outwardly and downwardly to form depending flanges, the ends of said flanges being cut away or beveled to fit across said rounded corners of the body, said

tray being of dimensions substantially corresponding to the inner dimensions of the body whereby said flanges will engage opposite walls of the body to hold it therein, and the bottom of the tray being provided with upstanding ribs substantially parallel to said upstanding walls and each other to form channels for the purpose specified.

5. A receptacle for the purpose described comprising, a body having rounded or curved corners at the junctions of its side and end walls, a tray-like member in said body having at opposite ends thereof upstanding walls connected at their tops to depending flanges, said walls and flanges being spaced apart a distance corresponding substantially to the curvature of the corners of the body, and the upper corners of the tray being cut away or beveled to fit across the curved corners of the box with said flanges engaging opposite walls of the body, the upstanding walls of the tray forming substantially right angles with other opposite walls of the container, and the bottom of the tray being provided with upstanding ribs substantially parallel to said upstanding walls and each other to form channels for the purpose specified.

6. As a new article of manufacture for use in adapting round cornered receptacles of the character described to hold tablets arranged in straight parallel rows, a tray-like member having upstanding walls at opposite ends or sides thereof, the tops of said walls being bent outwardly and downwardly to form depending flanges in spaced relation to the upstanding walls, and the ends of said flanges where joined to the walls being cut away to fit across the curved corners of the receptacles.

7. A box having interior and exterior rounded corners and means removably mounted therein for shortening the interior dimensions of the box in one direction and for providing angular corners therein, said means comprising connected upstanding end walls of substantially the width of the interior of the box and an outwardly extending flange on each of said end walls, each flange abutting the inner face of an end wall of the box proper to prevent endwise movement of said means within the box, the dimensions of the flanges being such as to position the upstanding walls away from the end walls of the box a distance corresponding substantially to the curvature of the rounded corners of the box body.

8. A box having interior and exterior rounded corners and means removably mounted therein for shortening the interior dimensions of the box in one direction and for providing angular corners therein, said means comprising a false bottom having upstanding walls at its opposite ends each of which is provided with an outwardly extending flange, said flanges engaging the inner faces of the opposite end walls of the box to hold said false bottom in place, and said false bottom being provided with spaced ribs parallel to said upstanding walls and to each other providing channels across said bottom to hold tablets on edge and in straight rows, the dimensions of the flanges being such as to position the upstanding walls away from the end walls of the box a distance corresponding substantially to the curvature of the rounded corners of the box body.

HENRY HERMANI.