C. L. GOODRUM.

TELEPHONE EXCHANGE SYSTEM.

APPLICATION FILED APR. 26, 1916.

1,221,166.

Patented Apr. 3, 1917.

3 SHEETS—SHEET 1.

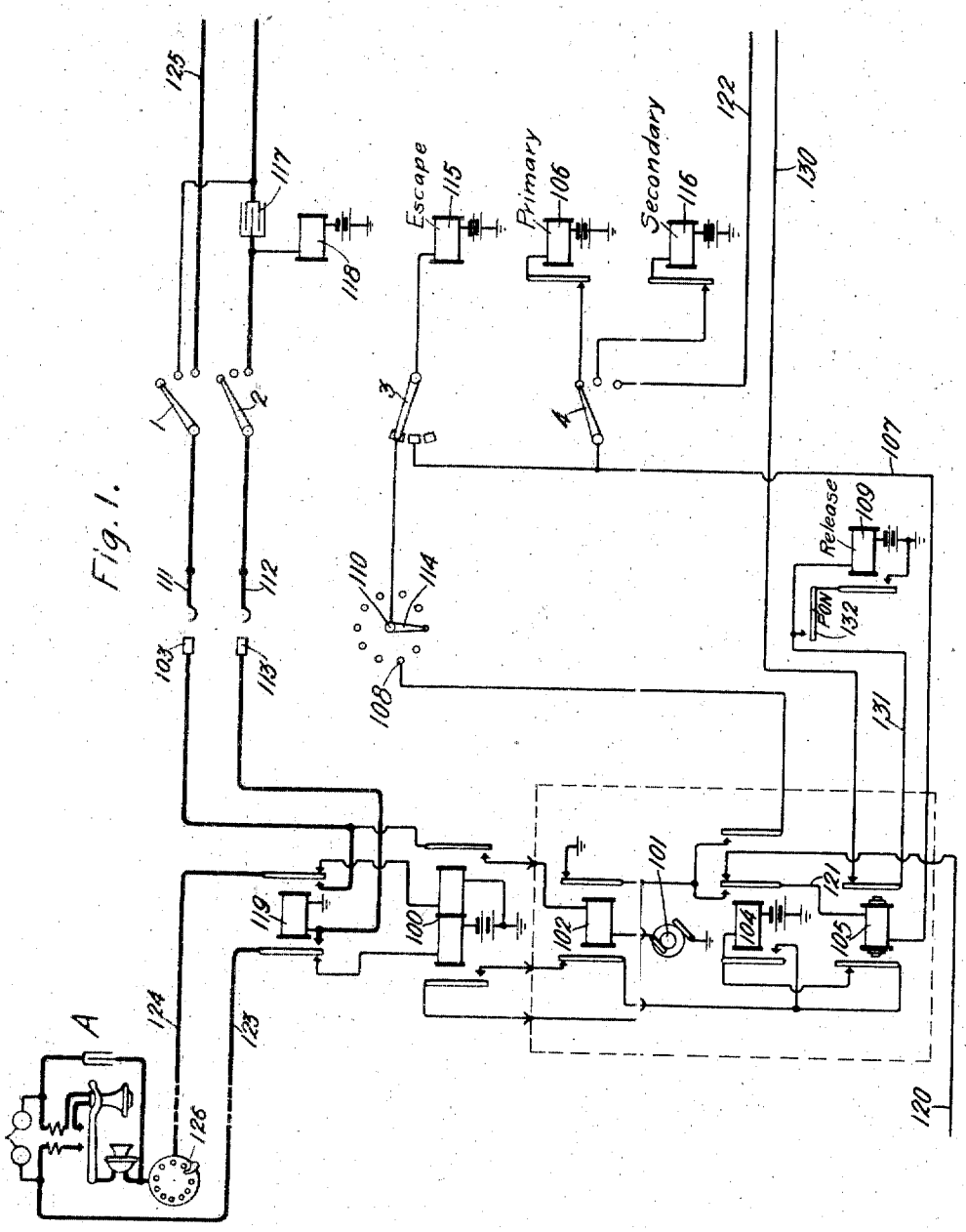

Fig. 1.

Inventor:
Charles L. Goodrum.
by A. C. Gunnel. Att'y.

C. L. GOODRUM.

TELEPHONE EXCHANGE SYSTEM.

APPLICATION FILED APR. 26, 1916.

1,221,166.

Patented Apr. 3, 1917.

3 SHEETS—SHEET 2.

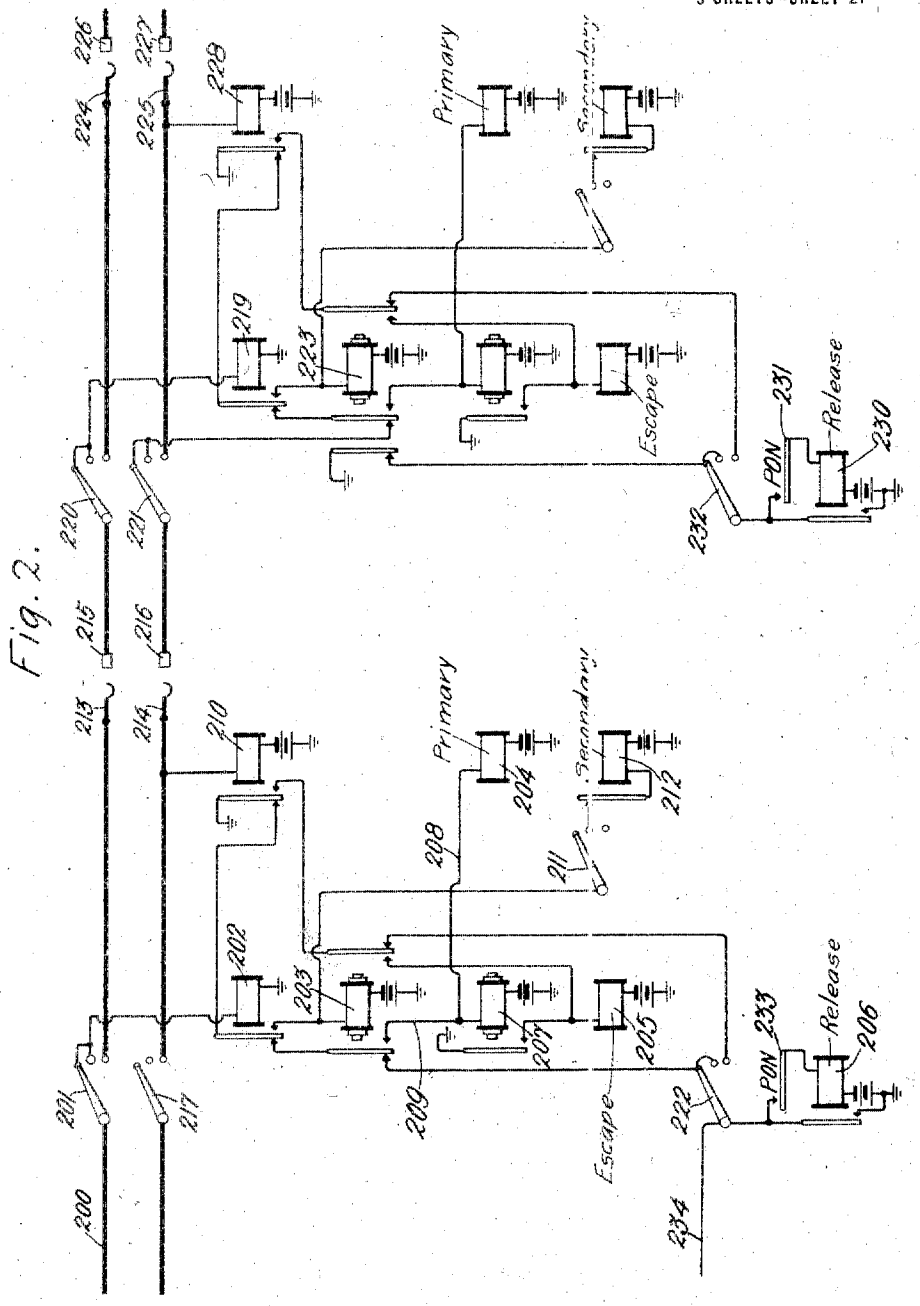

Fig. 2.

Inventor:
Charles L. Goodrum.

by A. C. Hand. Att'y.

C. L. GOODRUM.

TELEPHONE EXCHANGE SYSTEM.

APPLICATION FILED APR. 26, 1916.

1,221,166.

Patented Apr. 3, 1917.

3 SHEETS—SHEET 3.

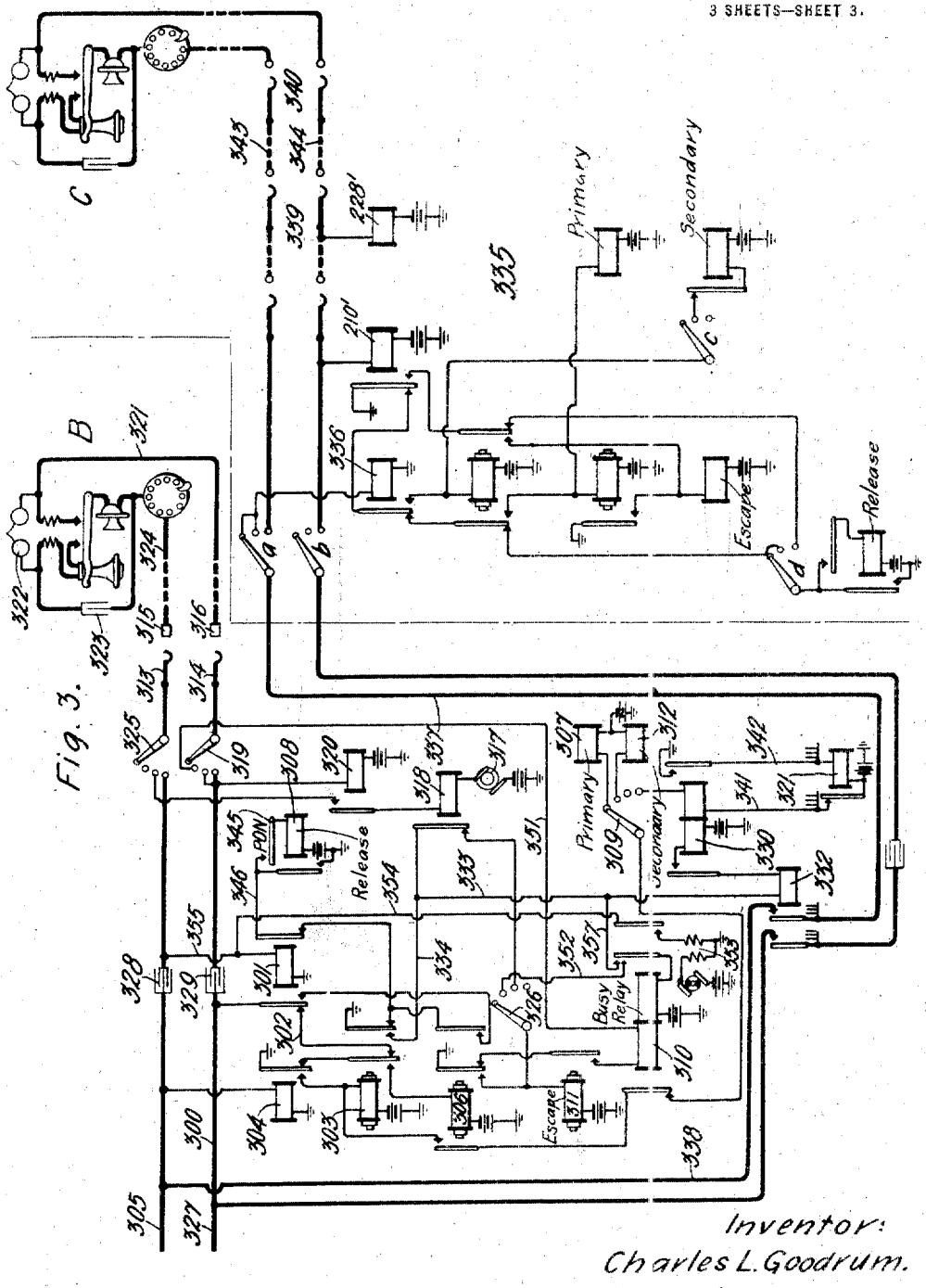

Fig. 3.

Inventor:
Charles L. Goodrum.
by A. T. Hannel. Att'y.

UNITED STATES PATENT OFFICE.

CHARLES L. GOODRUM, OF NEW YORK, N. Y., ASSIGNOR TO WESTERN ELECTRIC COMPANY, INCORPORATED, OF NEW YORK, N. Y., A CORPORATION OF NEW YORK.

TELEPHONE-EXCHANGE SYSTEM.

1,221,166. Specification of Letters Patent. Patented Apr. 3, 1917.

Application filed April 26, 1916. Serial No. 93,630.

To all whom it may concern:

Be it known that I, CHARLES L. GOODRUM, a citizen of the United States, residing at New York, in the county of New York and State of New York, have invented certain new and useful Improvements in Telephone-Exchange Systems, of which the following is a full, clear, concise, and exact description.

This invention relates to telephone exchange systems employing machine switching with subscribers' control. Its object is to provide a circuit arrangement wherein the calling party may set up a connection with the called party over a train of automatic switches, and after talking with such party, may, by operating his sender, bring a third party into the connection. Provision is also made for introducing another party or parties into the talking circuit, if desired.

In accordance with this invention, a calling subscriber sets up a connection by means of a sender, over an automatic switch, or in the case of a large exchange, over a train of such switches. When the called party responds, a circuit change takes place in the connector which prepares a circuit for an electromagnetic responsive device, for example, a relay, which is operated if the calling party subsequently operates a switch, which may be his sender, to interrupt the line circuit. This relay, in operating, connects a special connector, or in the case of a large exchange, a special first selector, in parallel to the connecting circuit connected to the calling line. The calling party now operates his sender to set such connector or such first selector and the succeeding switches to bring a third party into the connection.

The invention will be more clearly understood by reference to the accompanying drawings wherein Figure 1 illustrates a line finder circuit; Fig. 2 a first and second selector circuit, and Fig. 3 a connector circuit, and a special first selector circuit arranged in accordance with my invention. The invention will be best understood by describing in detail the operations involved in setting up a connection.

Upon the removal of the receiver at substation A, the line relay 100 is energized over the line circuit. This relay, by attracting its right armature, connects a source of alternating current 101 through a relay 102 to multiple finder terminals 103 of the calling line to render the same calling, and by attracting its left armature, energizes starting relay 104 over the following circuit: free pole of battery, relay 104, left armature and back contact of slow relay 105, left armature and back contact of relay 102, left armature and front contact of relay 100, right armature and back contact of relay 102 to ground. Relay 104, by attracting its left armature, locks itself to ground at the right armature and back contact of relay 102, independently of relay 105. By attracting its right armature, it closes the circuit of primary stepping magnet 106 of the line finder as follows: free pole of battery, magnet 106, its armature and back contact, arm 4 of the finder side switch and its first contact, conductor 107, slow relay 105, inner right armature and front contact of relay 104, armature and back contact of relay 102 to ground. Relay 104, by attracting its outer right armature, grounds multiple commutator segments 108 of the calling group. Relay 105, by attracting its right armature, interposes a break in the circuit of finder release magnet 109. Magnet 106 gives the finder brush shaft 110 a primary movement to position a set of brushes 111, 112 thereon, in operative relation to multiples of the calling group containing those of the calling line 103, 113. When the commutator brush 114 reaches calling commutator segment 108, now grounded, finder side-switch escapement magnet 115 is energized over the following circuit: free pole of battery, magnet 115, arm 3 and its first contact, brush 114, segment 108, outer right armature and front contact of relay 104, and right armature of relay 102 and its back contact to ground. Escape magnet 115 is arranged to release the side switch from position 1 to position 2 upon its energization. Arm 4, in moving off its first contact, opens the circuit of magnet 106, at which time brushes 111, 112 are in operative relation to multiples of the calling group containing those of the calling line 103, 113.

In moving into position 2, arm 4 trans-

fers the ground on conductor 107 to secondary stepping magnet 116 to initiate the secondary movement of brush shaft 110. This circuit is as follows: free pole of battery, magnet 116, its armature and back contact, arm 4 and its second contact, conductor 107, relay 105, inner right armature and front contact of relay 104, armature and back contact of relay 104, armature and back contact of relay 102 to ground. Arm 3 bridges its first and second contacts and escape magnet 115 is maintained energized in position 2 in parallel with magnet 116. When brush 111 reaches terminal 103 of the calling line, the following circuit is closed for relay 102: ground, generator 101, relay 102, right armature and front contact of relay 100, terminal 103, brush 111, arm 1 and its second contact, condenser 117, relay 118, free pole of battery to ground. Relay 102, in attracting its right armature, opens the circuit of magnet 116, thus stopping the finder with the brushes 111, 112 upon the calling line terminals 103, 113. The escape magnet 115 is also deënergized by the opening of this circuit, and releases the side switch into position 3, in which position, arm 2 closes the following circuit to energize cut-off relay 119 of the calling line: free pole of battery, relay 118, arm 2 and its third contact, brush 112, terminal 113, relay 119 to ground. Relay 119, in attracting its armatures, connects the calling line to the terminals 103 and 113 and deënergizes line relay 100, which, in retracting its right armature, removes the calling condition from the multiples 103 of the calling line to render the same non-calling in the other finders in which it appears. Relay 102, by attracting its right armature, removes the calling condition from multiple segments 108 of the calling group to render the group non-calling in the other finders in which it appears, and unlocks relay 104. Relay 104, in retracting its inner right armature, reconnects the in-starter wire 120 to conductor 121 which leads by way of arm 4 and its third contact to the out-starter wire 122 leading to the next idle finder. Arms 1 and 2, in moving into position 3, close the following circuit: free pole of battery, relay 118, arm 2 and its third contact, brush 112, terminal 113, left armature and front contact of relay 119, line conductor 123, telephonic apparatus at substation A, line conductor 124, right armature and front contact of relay 119, terminal 103, brush 111, arm 1 and its third contact, conductor 125, conductor 200, arm 201 and the first contact of the first selector side switch, relay 202 to ground. Relay 202, in attracting its armature, energizes a slow relay 203, which, in attracting its left armature, interposes a break in the circuit of the first selector release magnet 206, and connects primary stepping magnet 204 and a slow relay 207 in parallel to the back contact of stepping relay 202.

The calling party now operates his sender 126 to transmit the first digit of the wanted number. Each time the sender interrupts the line circuit, relay 202 deënergizes, transmitting an impulse over the following circuit to magnet 204: free pole of battery, magnet 204, conductors 208, 209, left armature and front contact of relay 203, armature and back contact of relay 202, armature and back contact of relay 210 to ground. Slow relay 207 energizes upon the first retraction of the armature of relay 202, and remains energized as long as the sender is operating. At its armature and front contact, relay 207 closes a circuit to energize escape magnet 205. The escape magnet is constructed upon its deënergization, to release the side switch from position 1 to position 2, in the well-known manner. When the sender restores and maintains relay 202 energized, relay 207, after an interval, retracts its armature, opening the circuit of escape magnet 205, which, in deënergizing, releases the side switch into position 2. In position 2, arm 211 closes the circuit of secondary stepping magnet 212 to drive the brushes 213, 214 over the multiples 215, 216 of the selected group of trunks. Slow relay 203, at its right armature and front contact, connects escape magnet 205 to the front contact of a test relay 210. When brush 214 encounters the first grounded multiple contact 216, relay 210 energizes over the following circuit: free pole of battery, relay 210, brush 214, terminal 216, arm 221, inner left armature and back contact of relay 223, armatures and back contacts of relays 219, 228 to ground. At its armature and front contact, this relay closes the circuit of escape magnet 205, which is constructed to release the side switch from position 2 to position 3, upon its energization. Arm 211, in moving out of position 2, opens the circuit of magnet 212 to stop the brushes 213, 214 upon the seized trunk terminals 215, 216, and arms 201, 217, in moving into position 3, close the following circuit for the stepping relay 219 of the second selector: ground, relay 219, arm 220 and its first contact, terminal 215, brush 213, arm 201 and its third contact, conductors 200, 125, arm 1 and its third contact, brush 111, terminal 103, right armature and front contact of relay 119, conductor 124, telephonic apparatus at substation A, conductor 123, left armature and front contact of relay 119, terminal 113, brush 112, arm 2 and its third contact, relay 118, free pole of battery. Relay 219 opens its back contact, and deënergizes relay 210 before the right armature of relay 203 closes its back contact, thus preventing an impulse being trans-

mitted over side-switch arm 222, to the first selector release magnet 206. The circuit of relay 203 is broken when relay 202 deënergizes, as arm 201 moves off its second contact. Relay 219, in attracting its armature, removes ground from the multiples 216 to render this trunk busy to other testing selectors, and energizes a slow relay 223. The succeeding operations are identical with those just traced in connection with the first selector. When, during the secondary movement of the brushes 224, 225, over the terminals 226, 227 of the selected group of trunks, a grounded terminal 227 is reached, the test relay 228 is energized over the following circuit: free pole of battery, relay 228, brush 225, terminal 227, conductor 300, left armature and back contact of relay 301, conductor 302, armature and back contact of slow relay 303, armature and back contact of relay 304 to ground. Test relay 228, upon its energization, releases the side switch into position 3, as described in connection with the first selector operation. Arms 220, 221, in moving into position 3, cut off relay 219, and close the following circuit leading to the connector in which the seized trunk terminates: ground, relay 304, conductor 305, terminal 226, brush 224, arm 220 and its third contact, terminal 215, brush 213, arm 201 and its third contact, conductors 200, 125, arm 1 and its third contact, brush 111, terminal 103, right armature and front contact of relay 119, conductor 124, through the telephonic apparatus at substation A, conductor 123, left armature and front contact of relay 119, terminal 113, brush 112, arm 2 and its third contact, relay 118, free pole of battery. Relay 304, in attracting its armature, energizes a slow relay 303. Relay 303, in attracting its outer armature, interposes a break in the circuit of connector release magnet 308, and by attracting its inner armature, connects a slow relay 306 to the back contact of relay 304. The calling party now operates his sender 126 to interrupt the line circuit a number of times equal to the tens digit of the wanted line, plus one. The first retraction of the armature of relay 304 energizes slow relay 306. This relay, by attracting its left armature, connects the primary stepping magnet 307 of the connector to the front contact of relay 304, and in attracting its inner right armature, closes a circuit to energize escape magnet 311. The sender 126, in restoring, now causes the relay 304 to transmit impulses over the following circuit to magnet 307: free pole of battery, magnet 307, connector side-switch arm 309 and its first contact, left armature and back contact of relay 310, left armature and front contact of relay 306, armature and front contact of relay 304 to ground. When the sender restores and permanently closes the line circuit, relay 304 remains energized, and after an interval, relay 306 deënergizes. In retracting its left armature, this relay disconnects magnet 307 from the front contact of relay 304, and in retracting its inner right armature deënergizes escape magnet 311, which in the well-known manner, releases the side switch into position 2. Arm 309 in position 2, connects the secondary stepping magnet 312 in the stepping circuit. The calling party now operates his sender to interrupt the line circuit a number of times equal to the units digit of the called number, plus one. Upon the first deënergization of relay 304, relay 306 is energized and connects magnet 312 to the front contact of relay 304, and at its inner right armature and front contact again energizes escape magnet 311. The sender, in restoring, now causes the relay 304 to transmit impulses over the following path, through magnet 312, to step the positioned brushes 313, 314 over the group of multiples containing those of the wanted line 315, 316: free pole of battery, magnet 312, arm 309 and its second contact, left armature and back contact of relay 310, left armature and front contact of relay 306, armature and front contact of relay 304 to ground. The restoration of the sender to normal position, and consequent maintained energization of relay 304, causes relay 306 to be deënergized. This relay, in retracting its inner right armature, deënergizes escape magnet 311, which releases the side switch into position 3 if the called line is idle, in which position ringing current is applied to such line.

In position 3, the following circuit is closed to energize escape magnet 311: free pole of battery, magnet 311, arm 326 and its third contact, armature and back contact of relay 318, outer armature and front contact of relay 303 to ground. Arm 319, in moving into position 3, closes the following circuit to energize a relay 320 to close the ringing circuit: free pole of battery, relay 320, arm 319 and its third contact, brush 314, terminal 316, to which is connected the cut-off relay of the calling line, as shown in Fig. 1, to ground. Relay 320, in attracting its armature, closes the ringing circuit as follows: ground, battery, ringing generator 317, relay 318, armature and front contact of relay 320, arm 325 and its third contact, brush 313, terminal 315, conductor 324, condenser 323, bell 322, conductor 321, to ground through the cut-off relay of the called line.

When the party at substation B removes his receiver, relay 318 becomes energized, and in attracting its armature, opens the circuit traced for escape magnet 311, which, in deënergizing, releases the side switch into position 4. Arms 325 and 319, in moving out of position 3, open the ringing circuit traced, and complete the talking circuit.

Arm 319, in position 4, maintains the circuit for relay 320 and the cut-off relay of the called line. In position 4, the following circuit is closed over the called line: free pole of battery, relay 320, arm 319 and its fourth contact, brush 314, terminal 316, conductor 321, telephonic apparatus at substation B, conductor 324, terminal 315, brush 313, arm 325 and its fourth contact, relay 301 to ground. In parallel with the circuit traced, the cut-off relay of the calling line is held up. Relay 301, in energizing, interposes a break in the circuit of release magnet 308 of the connector.

The parties may now converse, talking current being supplied to the calling party over the following path: free pole of battery, relay 118 (Fig. 1), arm 2 and its third contact, brush 112, terminal 113, left armature and front contact of relay 119, conductor 123, telephonic apparatus at substation A, conductor 124, right armature and front contact of relay 119, terminal 103, brush 111, arm 1 and its third contact, conductor 125, conductor 200, arm 201 and its third contact, brush 213, terminal 215, arm 220 and its third contact, brush 224, terminal 226, conductor 305, relay 304 to ground. The path for talking current to the called party has already been traced. Condensers 328, 329 conductively separate but inductively unite the calling and called ends of this circuit.

Assuming now that after the parties at substations A and B have conversed, it is desired to bring the party at substation C into the telephonic circuit which has just been built up. The calling party will now operate his sender 126 to interrupt the line circuit once. Relay 304, in deënergizing, transmits an impulse to slow relay 306, and before this relay retracts its armatures, after its circuit is opened by the attraction of the armature of relay 304, an impulse is sent over the following path to a relay 330: ground, armature and front contact of relay 304, left armature and front contact of relay 306, left armature and back contact of relay 310, arm 309 and its fourth contact, right winding of relay 330, armature and back contact of relay 321, free pole of battery. Relay 330 energizes and locks itself over the following circuit: free pole of battery, left-winding of said relay, its armature and front contact, relay 332, conductors 333, 334, outer right armature and front contact of relay 303 to ground. Relay 332, in attracting its armatures, connects the special first selector 335 to talking conductors 305 and 327 in multiple with the connector circuit. Immediately upon the attraction of the armatures of relay 332, the following circuit is closed, including the sender 126 at the calling substation: free pole of battery, relay 118, (Fig. 1), arm 2 and its third contact, brush 112, terminal 113, left armature and front contact of relay 119, conductor 123, telephonic apparatus at substation A, sender 126, conductor 124, right armature and front contact of relay 119, terminal 103, brush 111, arm 1 and its third contact, conductor 125, conductor 200, arm 201 and its third contact, brush 213, terminal 215, arm 220 and its third contact, brush 224, terminal 226, conductor 305 where it divides, part going to ground through relay 304 and the remainder over conductor 338, inner armature and front contact of relay 332, conductor 337, arm *a* and its first contact to ground, through relay 336. The first selector circuit 335 is identical with that of the first selector shown in Fig. 2 and the selectors are equivalent switches. The operations involved in setting the switches 335, 339 and 340 will not be described in detail, since they are identical with that already described.

Upon the inclusion of the third substation C in the telephonic circuit, talking battery is supplied to said substation from the connector 340 in a circuit similar to that described in connection with the connector circuit shown in detail in Fig. 3. Relay 330, at its right armature and front contact, maintain relay 321 energized during conversation. Relay 321, in maintaining its armature attracted, prevents other regular connectors, to which conductor 341 is multiplied, from energizing their relays 330, thus preventing a relay 330 of any of such regular connectors from energizing and operating a relay 332 thereof to connect the seized special selector 335 to conductors 305, 327 of such connector. Thus the selector 335 is rendered busy to other connectors to which it is normally accessible.

If it is desired to bring a fourth party into the telephonic circuit so built up, a relay of the connector 340, similar to relay 332 is energized to connect a special first selector, similar to 335, to conductors 343, 344. From this point on the operation will be the same as that already traced.

The release of the finder and the selectors is controlled by the calling party, and the release of the connectors jointly by the calling and called parties; that is to say, the release of a given connector is under the control of the calling party and the particular called party to which such connector is connected.

Assuming the calling party is the first to replace his receiver, relays 118, 304 become deënergized. Relay 304, in retracting its armature, causes an impulse to pass to relay 306 over the following circuit: armature and back contact of relay 304, armature and front contact of slow relay 303, relay 306. Relay 306, in response to this impulse, attracts its armatures and holds them attracted after relay 303 deënergizes, the circuit of

this relay being opened when relay 304 retracts its armature. The deënergized condition of relays 304 and 303, and the energized condition of relay 306, cause an impulse to flow over the following circuit: outer armature and back contact of relay 303, outer right armature and front contact of relay 306, left armature of relay 301 and its front contact, conductors 300, 327, terminal 227, brush 225, relay 228, free pole of battery. Relay 228, in attracting its armature, closes the circuit of second selector release magnet 230 as follows: free pole of battery, magnet 230, primary off-normal contact 231, side-switch arm 232 and its third contact, armature and back contact of relay 223, armature and front contact of relay 228 to ground. Magnet 230, in attracting its armature, locks itself up over the primary off-normal contact 231 which is opened when the brush shaft completely restores, thus deenergizing magnet 230. In parallel with the circuit just traced for relay 228, relay 210 of the first selector is energized. This relay, in attracting its armature, transmits an impulse to release magnet 206 of the first selector as follows: free pole of battery, magnet 206, primary off-normal contact 233, arm 222 and its third contact, armature and back contact of relay 203, and armature and front contact of relay 210 to ground. Magnet 206, in energizing, locks itself to ground over primary off-normal contact 233, which is opened when the selector brush shaft completely restores, thus deënergizing magnet 206. Magnet 206, in attracting its armature, also grounds a conductor 234 leading back to the finder release magnet 109 over conductor 130. This circuit is as follows: ground, armature and front contact of magnet 206, conductors 234, 130, right armature and back contact of relay 105, conductor 131, magnet 109 to free pole of battery. Magnet 109, in attracting its armature, locks itself over primary off-normal contact 132, which opens when the finder brush shaft 110 completely restores, thus deënergizing magnet 109.

When the calling party replaced his receiver, a relay at the connector 340, similar to relay 304, became deënergized, and relay 306 of such connector, in momentarily energizing, transmitted an impulse to relays 210′ and 228′ of the first and second selectors, respectively, associated with such connector. These relays, in energizing, release the associated switches, as described.

When the called party replaces his receiver, relays 320 and 301 are deënergized. Relay 301, in retracting its right armature, closes the following circuit for release magnet 308 of the connector: free pole of battery, release magnet 308, primary off-normal contact 345, conductor 346, right armature and back contact of relay 301, outer armature and back contact of relay 303 to ground. Magnet 308, in attracting its armature, locks itself over the primary off-normal contact 345, which is opened when the connector brush shaft completely restores, thus deenergizing magnet 308. When the called party C replaces his receiver a release magnet similar to 308 becomes energized and releases such connector, as already described.

Going back to that point in the operation where the calling party sets the connector upon the terminals of the wanted line, if such line is busy as a called line, its multiple 316 will have potential impressed thereon from battery through a relay similar to relay 320 over side-switch arm 319 and its fourth contact and brush 314 of another connector, or if busy as a calling line, from battery, through relay 118 (Fig. 1), side-switch arm 2 and its third contact, brush 112. Consequently, upon the termination of the units impulses, the following circuit will be closed for a busy relay 310: ground, inner right armature and back contact of slow relay 306, deënergized upon the maintained energization of relay 304 upon the termination of the units impulses, armature and front contact of magnet 311, which is slow to release, and thus maintains its armature attracted for an interval after its circuit is broken by the deënergization of slow relay 306, left winding of relay 310, conductor 351, arm 319 and its second contact, brush 314 to terminal 316. Relay 310 locks itself over its right winding, and inner armature and conductors 357, 333, 334 through the outer armature and front contact of relay 303, and holds the escape magnet 311 energized in parallel with itself over arm 326 and its second contact and conductor 352. Relay 310, at its outer right armature and front contact connects a busy tone apparatus 353 over conductors 354, 355 connected to the upper talking conductor, thus indicating to the calling party that the desired line is busy. When the calling party replaces his receiver, relay 304 becomes deënergized, and in retracting its armature, grounds the lower talking conductor 300. The relays 228 and 210, branched off in parallel at the second and first selectors, respectively, thereupon release the switches, as hereinbefore described, the release magnet 206 of the first selector, energizing the release magnet 109 of the finder. Relay 303, in retracting its outer armature, closes a circuit for the release magnet 308 of the connector as follows: free pole of battery, magnet 308, primary off-normal contact 345, conductor 346, right armature and back contact of relay 301, outer armature and back contact of relay 303 to ground. The retraction of the outer armature of relay 303 opens the circuit of escape magnet 311 and busy relay 310. The apparatus is now restored to normal, ready for another connection.

What is claimed is:

1. In a telephone exchange system, the combination with a calling and a called line, automatic selector and connector switches for establishing a connection between said line, and a third line, of an additional automatic switch, an electromagnetic responsive device associated with the last switch to said connection for operatively associating said additional switch with said calling line, means operated by the response of the called party for preparing a circuit for said device, and means controlled by the calling party for closing said circuit and for setting said additional switch to bring said third line into the connection.

2. In a telephone exchange system, the combination with a calling and a called line, automatic selector and connector switches, a sender associated with said calling line adapted to control said switches to establish a connection including said lines, and a third line, of an additional automatic switch, an electromagnetic responsive device associated with the last switch to said connection for operatively associating said additional switch with said sender, means operated by the response of the called party for preparing a circuit for said device, and means including said sender controlled by the calling party for completing said circuit, whereby said additional switch may be set by said sender to bring said third line into the connection.

3. In a telephone exchange system, the combination with a calling and a called line, automatic selector and connector switches, a sender associated with said calling line adapted to control said switches to establish a connection including said lines, and a third line, of an additional automatic switch, a relay associated with the last switch of the connection for operatively associating said additional switch with said sender, an electromagnetic switch operated when the called party answers and adapted to prepare a circuit for said relay, and means including said sender for completing said circuit, whereby said additional switch may be set by said sender to bring said third party into the connection.

4. In a telephone exchange system, the combination with a calling and a called line, automatic selector and connector switches, a sender associated with said calling line adapted to control said switches to interconnect said lines, side switches therefor, and a third line, of an additional automatic switch, an electromagnetic responsive device associated with the last switch to said connection for operatively associating said additional switch with said sender, a circuit adapted to be closed to advance the connector side switch when the called party answers to prepare a circuit for said device, means for closing said circuit controlled by said sender, and a relay operated by the closure of said circuit for removing the control of said additional switch from the remaining lines.

5. In a telephone exchange system, the combination with a calling and a called line, automatic selector and connector switches, side switches therefor, and a third line, of an additional automatic switch, an electromagnetic responsive device associated with the last switch to said connection for connecting said additional switch to said calling line, a circuit adapted to be closed to advance the connector side switch when the called party answers to prepare a circuit for said device, and means for closing said circuit controlled by the calling party.

6. In a telephone exchange system, the combination with a calling and a called line, automatic selector and connector switches, a sender associated with said calling line adapted to control said switches to establish a connection including said lines, of a third line, an additional train of automatic switches, an electromagnetic responsive device associated with the last switch in the established connection for associating the first switch of the additional train of switches with said calling line, means operated by the response of the called party for preparing the circuit of said device, and means including the calling party's sender for completing said circuit whereby said additional switches may be set by said sender.

7. In a telephone exchange system, the combination with a calling and a called line, automatic selector and connector switches, a sender associated with said calling line adapted to control said switches to establish a connection including said lines, a release circuit for said connector, fast and slow relays associated with said connector, the former responding to the line circuit interruptions caused by said sender, and the latter holding open said release circuit, and a third line, of an additional automatic switch, an electromagnetic responsive device associated with the last switch to said connection for operatively associating said additional switch with said sender, means operated upon the response of the called party for preparing a circuit for said device, and means including said sender and said fast and slow relays for completing said circuit while the established connection is maintained, whereupon said additional switch may be set by said sender to bring said third party into the connection.

8. In a telephone exchange system, the combination with a calling and a called line, automatic selector and connector switches, a sender adapted to control said switches to establish a connection including said lines,

and a third line, of an additional automatic switch, an electromagnetic responsive device associated with the last switch to said connection for operatively associating said additional switch with said calling line, means for preparing a circuit for said device, and means including said sender for completing said circuit, whereby said additional switch may be set by said sender to bring said third line into the connection.

In witness whereof, I here into subscribe my name this 25th day April A. D., 1916.

CHARLES L. GOODRUM.