US00D768109S

(12) United States Design Patent

Ohno

(10) Patent No.: US D768,109 S
(45) Date of Patent: ** Oct. 4, 2016

(54) **SPEAKER**

(71) Applicant: **YAMAHA CORPORATION**, Hamamatsu-shi, Shizuoka (JP)

(72) Inventor: **Masaharu Ohno**, Hamamatsu (JP)

(73) Assignee: **YAMAHA CORPORATION**, Hamamatsu-shi (JP)

(**) Term: **15 Years**

(21) Appl. No.: **29/528,754**

(22) Filed: **Jun. 1, 2015**

(30) **Foreign Application Priority Data**

Dec. 2, 2014 (JP) 2014-026904

(51) **LOC (10) Cl.** **14-03**

(52) **U.S. Cl.**
USPC **D14/204**; D14/214

(58) **Field of Classification Search**
USPC D14/214, 204, 210, 172, 167–168, 135, D14/156, 162, 188, 203.1, 224.1, 136, 157, D14/496, 124, 299, 502, 506, 368, 125, 353, D14/257, 211, 225, 497–500, 501–505; D13/194, 162, 110, 142; 181/144–145, 181/147–148, 150, 153, 157, 198–199; 381/300–302, 306, 345, 386–388; 439/680
CPC H04R 1/02; H04R 5/02; H04R 11/02; H04R 25/00; H05K 5/00
See application file for complete search history.

(56) **References Cited**

U.S. PATENT DOCUMENTS

D130,273	S	*	11/1941	Jensen	D9/423
3,135,838	A	*	6/1964	Wright	H04R 19/02 381/116
D214,909	S	*	8/1969	Briella	D13/184
D248,394	S	*	7/1978	Jensen	D14/214
D265,989	S	*	8/1982	Harris	D13/184
D269,345	S	*	6/1983	Payne, Jr.	D14/242
D272,063	S	*	1/1984	Ekuan	D14/505
D272,151	S	*	1/1984	Nomura	D14/198
D275,566	S	*	9/1984	O'Leary	D14/505
D286,041	S	*	10/1986	Hiraoka	D14/505
D289,648	S	*	5/1987	Felix	D14/242
D290,000	S	*	5/1987	Yamamoto	D14/505
D295,862	S	*	5/1988	Yonekura	D14/125
D296,899	S	*	7/1988	Chu	D14/365
4,758,910	A	*	7/1988	Kaneko	G11B 15/52 360/137
D301,140	S	*	5/1989	Satherley	D14/354
D301,881	S	*	6/1989	Yang	D14/135
D304,941	S	*	12/1989	Ito	D14/502
D311,915	S	*	11/1990	Hong	D14/135
D312,620	S	*	12/1990	Koepke	D14/354
D313,230	S	*	12/1990	Isaacs	D14/125
D327,676	S	*	7/1992	Yang	D14/135
D328,293	S	*	7/1992	Mak	D14/137

(Continued)

Primary Examiner — Paula Greene
(74) *Attorney, Agent, or Firm* — Sughrue Mion, PLLC

(57) **CLAIM**

The ornamental design for a speaker, as shown and described.

DESCRIPTION

FIG. **1** is a perspective view of the front, top and right side of a speaker showing my new design;
FIG. **2** is a perspective view of the front, bottom and right side thereof;
FIG. **3** is a front view thereof;
FIG. **4** is a rear view thereof;
FIG. **5** is a right side view thereof, the left side being a mirror image;
FIG. **6** is a top plan view thereof; and,
FIG. **7** is a bottom view thereof.
The broken line showing of the speaker is included for the purpose of illustrating portions of the speaker and forms no part of the claimed design.

1 Claim, 5 Drawing Sheets

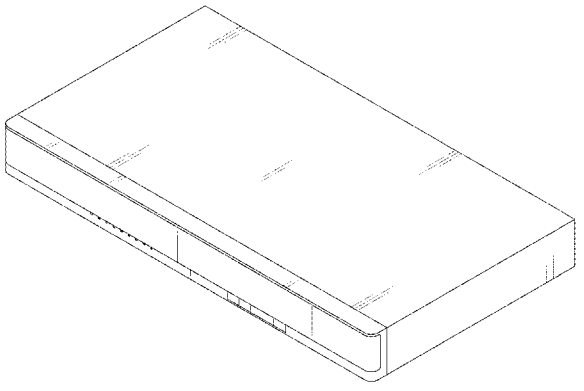

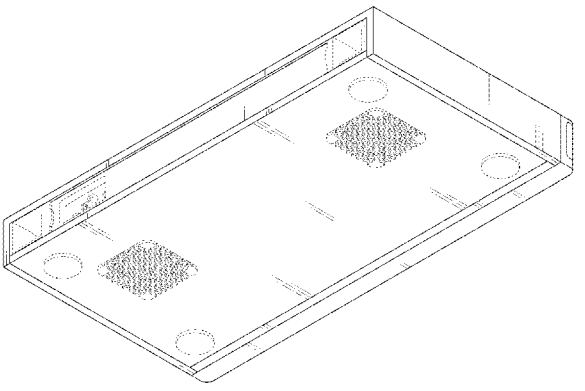

(56) **References Cited**

U.S. PATENT DOCUMENTS

D328,593	S	*	8/1992	Hutton	D13/184
D339,126	S	*	9/1993	Shimose	D14/135
D345,970	S	*	4/1994	Kawamoto	D14/125
D348,064	S	*	6/1994	Saito	D14/188
D369,356	S	*	4/1996	Olson	D14/214
D370,677	S	*	6/1996	Olson	D14/188
D372,918	S	*	8/1996	Manganese	D14/204
D383,139	S	*	9/1997	Hill	D14/242
D394,655	S	*	5/1998	Niitsu	D14/160
5,953,302	A	*	9/1999	Kobayashi	G11B 33/027 361/814
D418,138	S	*	12/1999	Miyazaki	D14/214
D432,115	S	*	10/2000	Juszkiewicz	D14/204
D435,532	S	*	12/2000	Hisatsune	D14/506
D459,709	S	*	7/2002	Kojima	D14/505
D466,875	S	*	12/2002	Kita	D14/125
D471,541	S	*	3/2003	Tomino	D14/240
D483,728	S	*	12/2003	Kim	D14/506
D501,659	S	*	2/2005	Yamaji	D14/188
D512,700	S	*	12/2005	Sonoda	D14/506
D515,053	S	*	2/2006	Morita	D14/502
D519,962	S	*	5/2006	Kim	D14/506
D519,963	S	*	5/2006	Lim	D14/505
D520,481	S	*	5/2006	Lim	D14/505
D521,966	S	*	5/2006	Kim	D14/502
D521,967	S	*	5/2006	Lim	D14/505
D522,986	S	*	6/2006	Kwon	D14/502
D526,979	S	*	8/2006	Lim	D14/506
D528,125	S	*	9/2006	Chen	D14/496
D530,692	S	*	10/2006	Lim	D14/506
D530,695	S	*	10/2006	Park	D14/502
D531,152	S	*	10/2006	Moriya	D14/168
D535,944	S	*	1/2007	Albano	D13/110
D544,455	S	*	6/2007	Park	D14/125
D558,786	S	*	1/2008	Green	D14/188
D561,142	S	*	2/2008	Oh	D14/506
D566,668	S	*	4/2008	Whittaker	D14/125
D566,685	S	*	4/2008	Koller	D14/168
D567,193	S	*	4/2008	Kang	D14/125
D567,203	S	*	4/2008	Park	D14/502
D580,385	S	*	11/2008	Tejima	D14/500
D601,583	S	*	10/2009	Andre	D14/496
D624,559	S	*	9/2010	Chung	D14/502
D626,568	S	*	11/2010	Yagi	D14/505
D645,475	S	*	9/2011	Kim	D14/502
D647,922	S	*	11/2011	Cho	D14/500
D654,091	S	*	2/2012	Son	D14/502
D656,959	S	*	4/2012	Lee	D14/500
D660,285	S	*	5/2012	Lee	D14/214
D714,253	S	*	9/2014	Aglassinger	D14/188
D714,344	S	*	9/2014	Kim	D14/496
D727,968	S	*	4/2015	Onoue	D14/500
D743,939	S	*	11/2015	Seong	D14/214
D746,338	S	*	12/2015	Kim	D14/204
D749,055	S	*	2/2016	Lee	D14/204
D754,094	S	*	4/2016	Cho	D14/188
D754,095	S	*	4/2016	Cho	D14/188

* cited by examiner

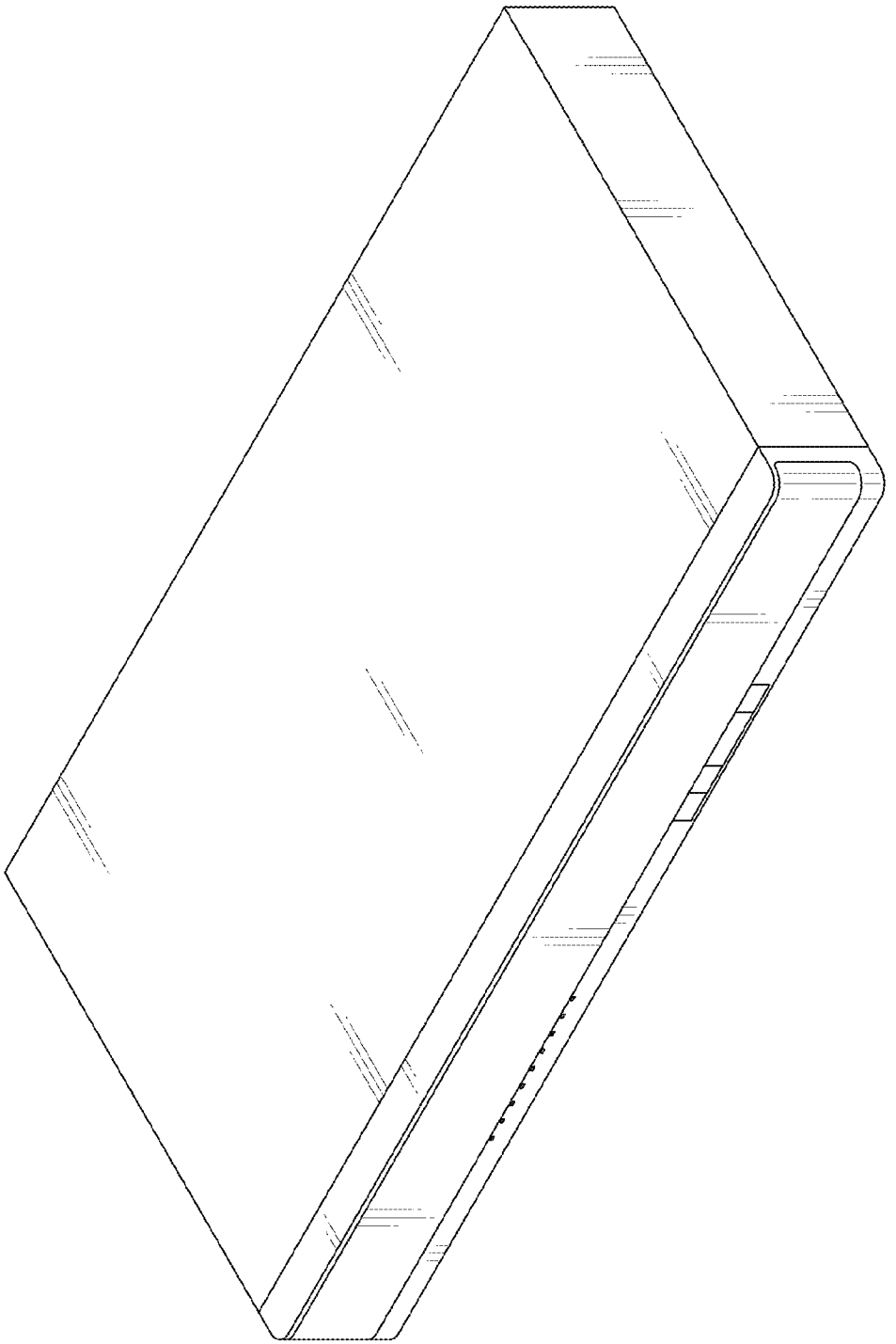

Fig. 1

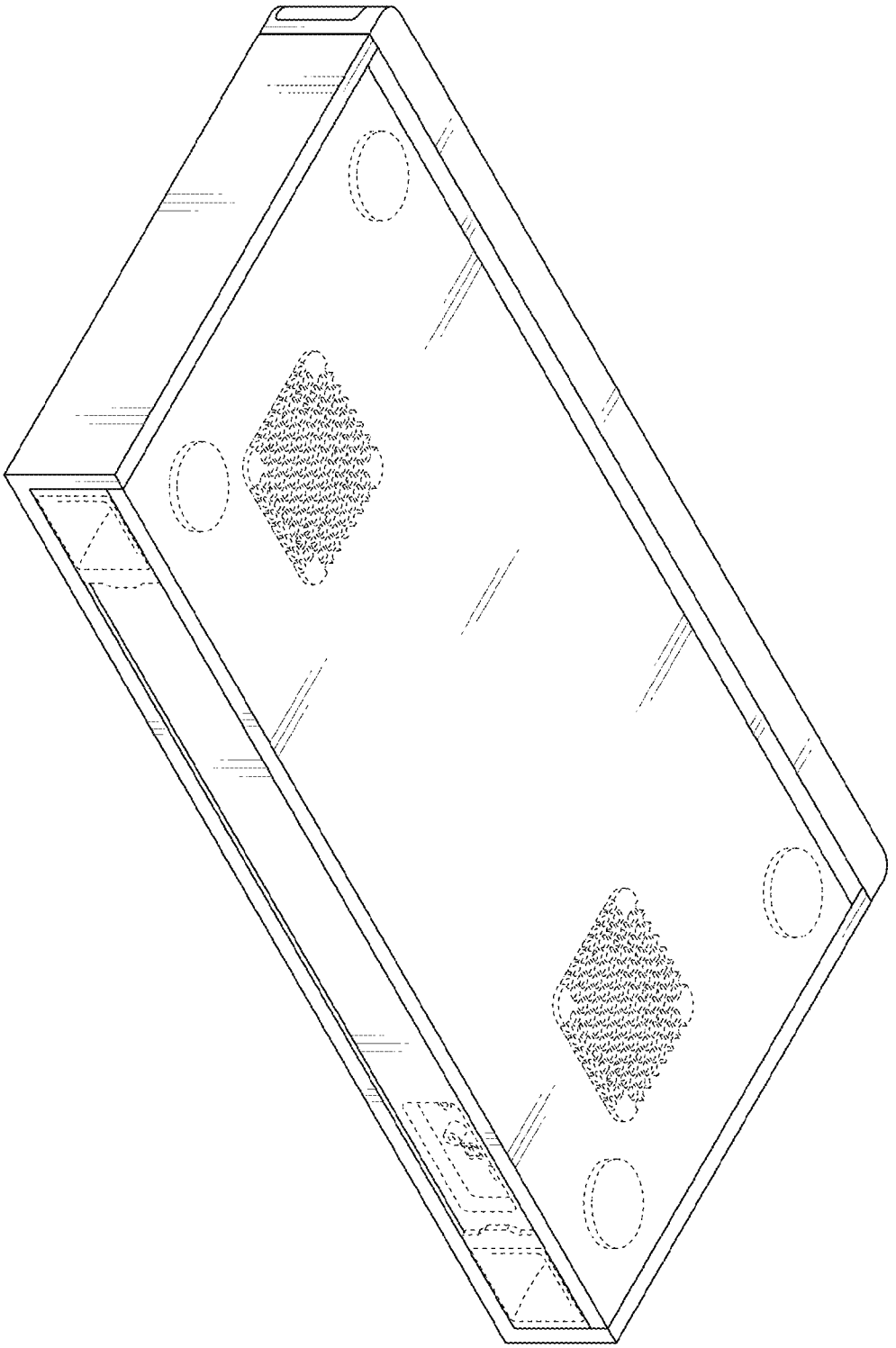

Fig. 2

Fig. 3

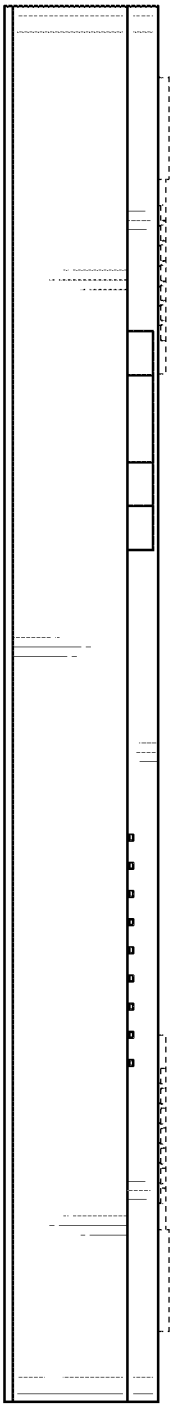

Fig. 4

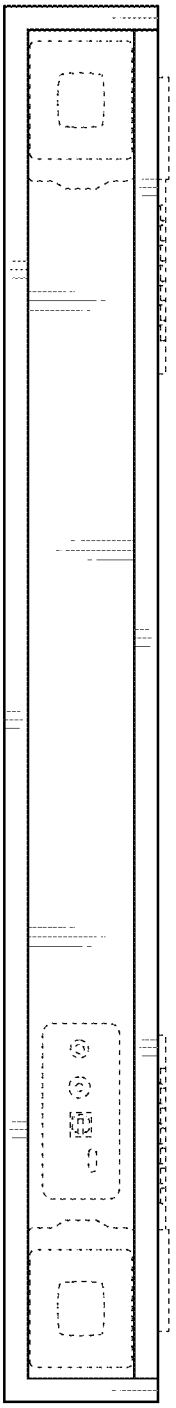

Fig. 5

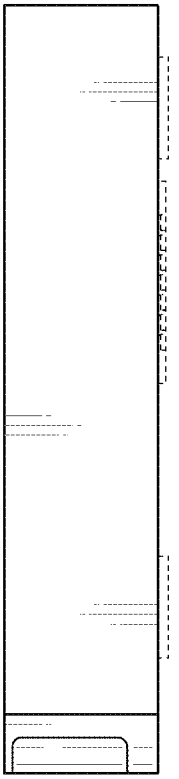

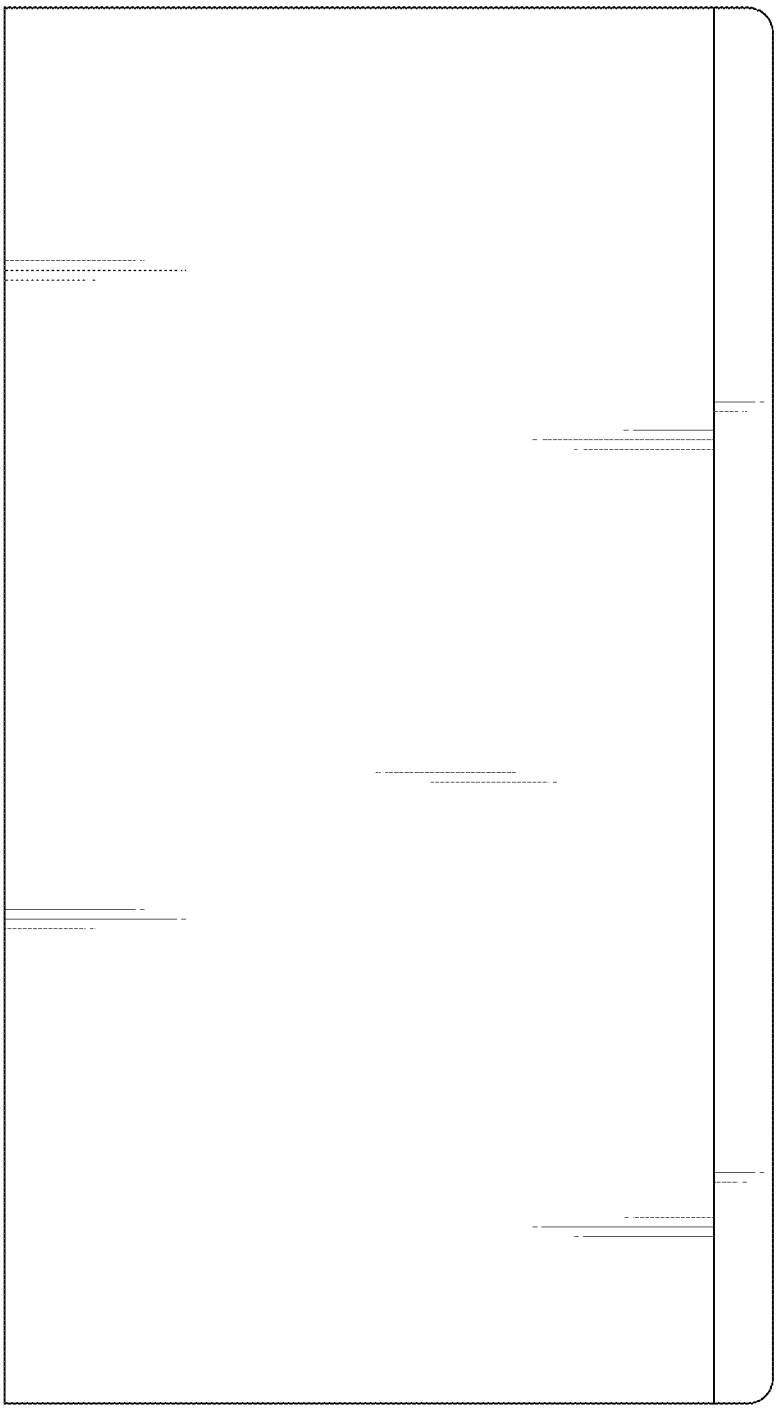

Fig. 6

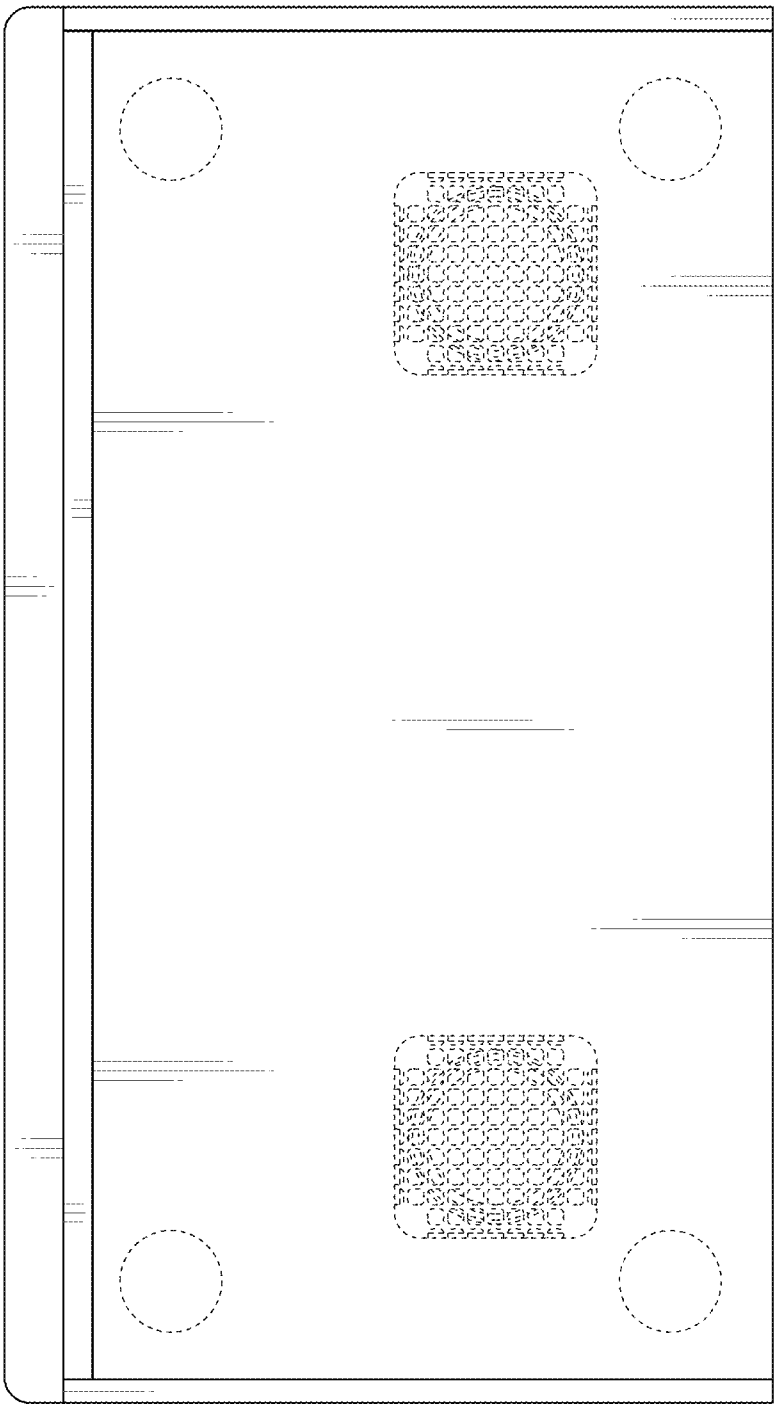

Fig. 7