Nov. 30, 1943. R. HICKS 2,335,413

ADJUSTABLE ELECTRIC SHAVER

Filed Sept. 29, 1943

Fig. 1.

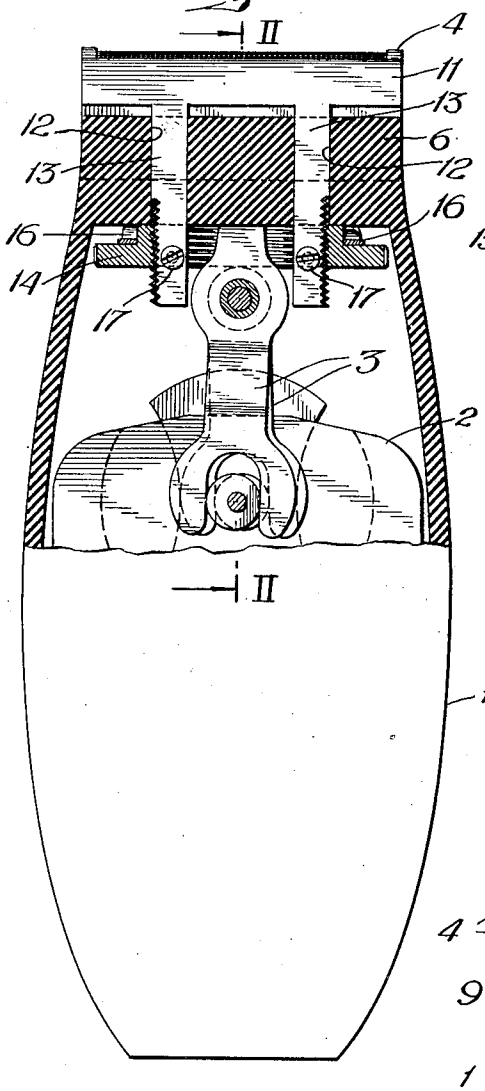

Fig. 2.

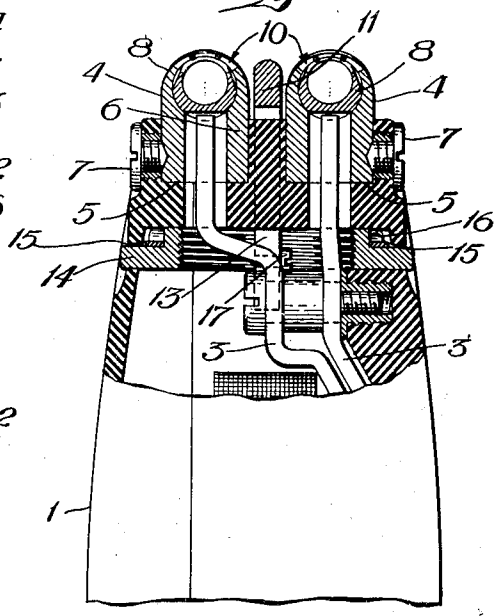

Fig. 3.

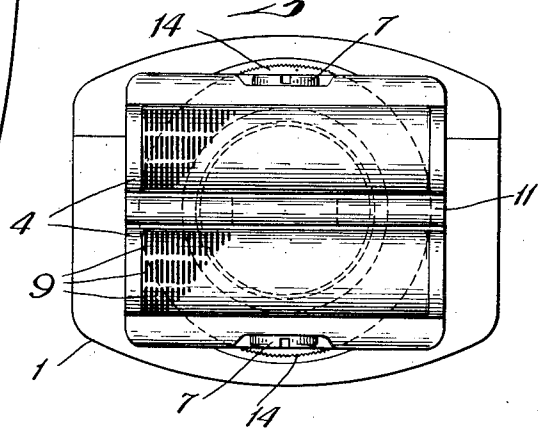

Reginald Hicks

INVENTOR

Patented Nov. 30, 1943

2,335,413

UNITED STATES PATENT OFFICE

2,335,413

ADJUSTABLE ELECTRIC SHAVER

Reginald Hicks, Yonkers, N. Y.

Application September 29, 1943, Serial No. 504,518

10 Claims. (Cl. 30—43)

The primary object of this invention is a so-called adjustable shaver, so organized as to be relatively inexpensive to manufacture, adaptable to standard shaver constructions without requiring radical changes and easy to assemble and manipulate. Other objects and advantages will presently be apparent.

Virtually from the beginning of the electric shaver industry the difficulty has been recognized of constructing one shearing head capable of giving the best shaving results with every kind of skin texture and hair growth. A shear plate of a specified thickness and aperture dimension may be considered ideal for one person but unsatisfactory for another, giving the latter either a poor, slow shave or, if his skin is especially soft, sensitive or pliable, a too close shave resulting in burning or abrading the skin. With the object of trying to meet this difficulty, it was common practice for many years for a manufacturer to put out two sizes of shearing head, the one having larger shear plate apertures than the other. With the same object many different types of shearing head have also been evolved. Also, sundry proposals have been made for mechanical adjustments intended to permit the user to adapt the shaver to the necessities of his own particular skin and beard conditions; but for various reasons, largely having to do with their complexity, cost, difficulty of manipulation or likelihood of derangement in use, none of such schemes has been adopted up to this time. Latterly, the more common commercial practice has been to furnish but one size of head having apertures sufficiently large in proportion to the shear plate thickness to satisfy the difficult-to-shave user, leaving it to the others to try and acquire sufficient skill in manipulating the shaver to achieve satisfactory, comfortable shaves.

According to the present invention, a preferred embodiment of which is described below in detail, adjustability is achieved by the use of two spaced shear plates having a bar or skin-engaging member between them and organized for adjustment relatively to the shear plates in a direction to variably control the engagement of the skin with the shear plates or shearing zones on either side of the bar and so vary the shaving action to suit the needs of different users.

In the accompanying drawing the invention is shown applied to a two-headed shaver generally similar in some respects to one illustrated in certain figures of the drawings of Patent No. 2,164,425, Fig. 1 being a broken out elevation, Fig. 2 a section on the line II—II of Fig. 1, and Fig. 3 a plan view of the shearing head end of the shaver.

The elongated shaver case 1 houses the usual motor 2 which, through levers 3, actuates the cutting mechanism.

In this form of shaver two separate parallel shearing heads 4 adapted for simultaneous use are mounted on one end of the case, set in jaws or channels 5 on either side of a central wall or spacer 6 and held in place by screws 7; and within the heads are inner cutters 8 actuated by levers 3. Two spaced shear plates or shearing zones are thus provided and while the particular shape of the shear plate apertures forms no part of the present invention, they are indicated as consisting of interrupted slots 9, forming, in effect, three parallel rows of slots (Fig. 3).

The two shearing heads are preferably of identical construction and provided with shaving apertures over their entire skin-engaging faces including close-shaving zones 10 (Fig. 2) along or adjacent their nearest edges, that is to say, zones adapted to cut more closely than such other more remote shaving zones of the two shear plates as may be provided. Although the dimensions involved are too small to illustrate, it will be understood that this can readily be achieved by various means, such as by making the apertures in the zones 10 larger than the other apertures or by grinding the shear plates thinner in the zones 10. However achieved and regardless of the form of such other shearing zones as may be provided, these zones 10 are designed to shave the individual whose skin or beard condition require what will be termed a "close shaving" instrument, meaning too close for the individual whose skin is soft and sensitive and subject to what is usually termed burning. The selection of aperture dimensions appropriate to the contour and thickness of the shear plate in order to achieve this purpose is a matter understood by all familiar with shaver design.

Between the shear plates is a skin-engaging member 11 mounted for movement relatively to the shear plates in a direction to more, or less, obstruct contact of the skin with the shear plates in the zones 10 and thereby respectively decrease, or increase, the shaving action of these close shaving zones. When the shear plate apertures take the form of transverse slots, as shown, the effect is that of varying the length of the slots in the zones 10, as will be understood.

Assuming that outer or more remote shear plate openings are provided of a character suitable for shaving the sensitive skinned individual,

the arrangement is preferably such that it is virtually impossible, under any reasonable shaving pressure, for the user to bring the surface to be shaved into effective shaving engagement with the close shaving zones when the member 11 is in its position of maximum obstruction. That is to say, the effective slot length in the zones 10 is reduced to zero. In such position shaving is achieved through such outer or more remote shear plate apertures. Conversely, when the member 11 is in its position of minimum obstruction, the close shaving zones are fully accessible to the skin. As will be apparent, intermediate or "medium shave" zones could be provided and likewise rendered more or less accessible according to the setting of the skin engaging member.

The form of the skin-engaging member may be variously designed but, as shown, comprises a bar extending the length of the space between the shear plates and having a smooth, continuous outer face for contact with the skin. Depending from the bar and extending into the interior of the case through guide openings 12 in wall 6 are two spaced posts 13 and means are provided within the case and accessible through an opening in one its walls for moving the bar up and down (assuming the position of the shaver to be as shown in Fig. 1) to effect the shaving adjustment described.

In this preferred form the outer or remote faces of posts 13 are threaded for engagement with an annular, interiorly threaded adjusting wheel 14 mounted within the case and accessible for outside manipulation through opening 15 in the side walls of the case (Fig. 2). Thus by rotating the wheel the bar 11 is advanced or withdrawn, in a direction substantially normal to the surface to be shaved, to control and modify the engagement of the skin with the shaving zones on either side of the bar and thereby vary the shaving action of such zones as desired by the particular user. As will be observed, the inner cutter actuating levers 3 pass up through an are free to oscillate within the center opening of the annular adjusting wheel.

As a result of utilizing two spaced shear plates with the adjustment member between them it is possible to obtain a quite close control over the position relative to the adjacent zones of the shear plates of that portion of the skin being shaved which bridges the gap between the two heads, and, accordingly, close control over the action of the close shaving zones. Also, the outer or remote edges of the heads, which alternate as the leading edges as the shaver is moved back and forth, are unaffected by the control of the close shaving zones and can therefore be provided with effective combing or provision for cutting long hairs or otherwise designed as may be deemed desirable.

In order to avoid yielding under the pressure of the skin during shaving, member 11 is arranged to be rigidly supported in all positions of adjustment. This is achieved by having the adjusting wheel work against a fixed support, as against the lower edges of case openings 15; and outward play in the adjusting unit is prevented by a spring washer 16 seated on the upper side of the wheel and engaging the inside of the end wall of the case.

Stop means are provided for limiting the upward or outward movement of the adjuster bar 11 and preventing the inadvertent disengagement of the post threads from those of the adjusting wheel, such as screws 17 inserted in the posts after assembly, the heads of which screws are adapted to engage the end wall of the case at the desired upward limit of movement of the bar. The downward or inward movement of the bar is limited by the engagement of its under surface with the top surface of wall 6.

Although only the preferred form of the invention has been shown and described, and applied to a particular shaver construction, certain of the principles involved will be recognized as lending themselves to embodiment in different forms to meet particular needs or preferences and the following is claimed:

1. The combination with a shaver including an elongated case, two parallel shearing heads mounted on one end of the case for simultaneous use and provided with spaced shear plates having their nearest shaving zones adapted to cut more closely than more remote shaving zones, of a skin-engaging member located between said shear plates and adjustable in a direction substantially normal to the surface to be shaved to render the said close shaving zones more, or less, accessible to contact with the skin, an annular, internally threaded control wheel within the case and adapted for rotation in a plane normal to the longitudinal axis of the case, said wheel being accessible through an opening in a wall of the case, and two spaced posts extending from the skin-engaging member between the heads and into the case and having threaded portions within the case engaged with the threads of the control wheel.

2. The combination with a shaver comprising an elongated case, shaving means mounted thereon including two spaced shear plates adapted for simultaneous use and having their nearest shaving zones adapted to cut more closely than more remote shaving zones, of a skin-engaging member located between said shear plates and adjustable in a direction substantially normal to the surface to be shaved to render the said close shaving zones more, or less, accessible to contact with the skin, a manually rotatable control member within the case and accessible from the exterior through an opening in a wall thereof, and means for applying the rotation of said control member to effect the said adjustment of the skin-engaging member.

3. The combination with a shaver comprising a case, shaving means mounted thereon including two spaced shear plates adapted for simultaneous use and having their nearest shaving zones adapted to cut more closely than more remote shaving zones, of a skin-engaging member located between said shear plates and adjustable in a direction substantially normal to the surface to be shaved to render the said close shaving zones more, or less, accessible to contact with the skin, and adjustment means for said member extending between the shear plates into the interior of the case and accessible from the exterior through an opening in a wall thereof.

4. The combination with a shaver comprising a case and shaving means mounted thereon including two spaced shear plates adapted for simultaneous use, of a skin-engaging member located between the shear plates and adjustable in a direction to more or less obstruct contact with the skin with the shearing zones adjacent said member, and adjustment means for said member mounted on the case.

5. The combination with a shaver having two spaced shear plates adapted for simultaneous use

and having their nearest shaving zones adapted to cut more closely than more remote shaving zones, of a skin-engaging member located between said shear plates and manually adjustable in a direction substantially normal to the surface to be shaved to render the said close shaving zones more, or less, accessible to contact with the skin.

6. The combination with a shaver comprising a case, shaving means mounted on one end of the case and including two spaced shear plates, of a skin-engaging member mounted between the shear plates with freedom for movement relatively thereto in a direction substantially normal to the surface to be shaved, and guide means for said member extending through the said end of the case between the shear plates.

7. The combination with a shaver having two spaced shear plates adapted for simultaneous use, of a skin-engaging member located between the shear plates and adjustable relatively to them in a direction substantially normal to the surface to be shaved.

8. The combination with a shaver comprising a case and shaving means mounted thereon including two spaced shear plates adapted for simultaneous use, of a skin-engaging member located between the shear plates and adjustable relatively to them to more, or less, obstruct contact of the skin with the shear plates in zones adjacent said member, such zones being adapted for close shaving when said member is in its position of minimum obstruction.

9. In an adjustable shaver comprising a case and shaving means mounted thereon, an adjustable skin-engaging member comprising a bar mounted on the case adjacent the shaving means with freedom for movement relatively thereto, two spaced posts depending from the bar and extending through openings in the case into the interior thereof, said posts having threaded portions within the case, and an annular adjustment wheel mounted within the case and accessible through an opening in a wall thereof, said wheel encircling said posts and interiorly threaded to engage their said threaded portions.

10. In an adjustable shaver comprising a case and shaving means mounted thereon, an adjustable skin-engaging member comprising a bar mounted on the case adjacent the shaving means with freedom for movement relatively thereto, supporting and actuating means for the bar extending within the case having a threaded portion therein, and an annular adjustment wheel mounted within the case and accessible through an opening in a wall thereof, said wheel being interiorly threaded to engage said threaded portion of the supporting and actuating means.

REGINALD HICKS.