G. LEFÈVRE.

ROTATING ADVERTISING APPARATUS.

APPLICATION FILED JUNE 1, 1909.

954,525. Patented Apr. 12, 1910.

4 SHEETS—SHEET 1.

FIG_1_

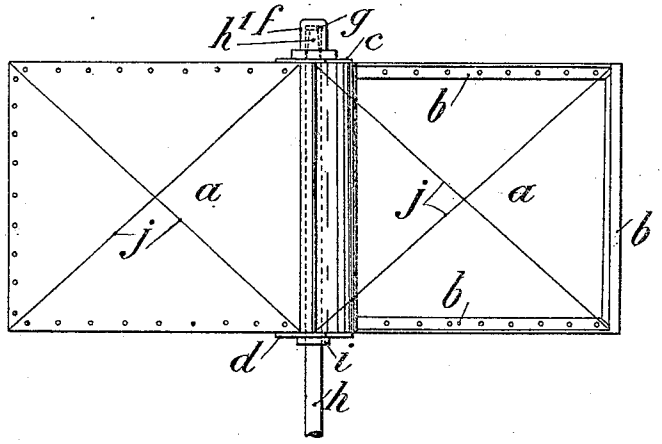

FIG_2_

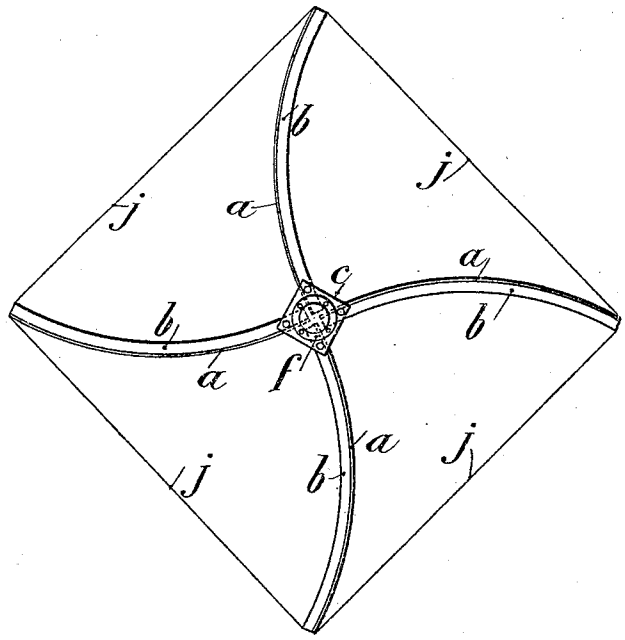

Witnesses:-
C. Cassia Franck
Hilda Feiner

Inventor:-
Gaston Lefèvre
by [signature]
his Attorney

ANDREW B. GRAHAM CO., PHOTO-LITHOGRAPHERS, WASHINGTON, D. C.

G. LEFÈVRE.

ROTATING ADVERTISING APPARATUS.

APPLICATION FILED JUNE 1, 1909.

954,525. Patented Apr. 12, 1910.

4 SHEETS—SHEET 2.

FIG_3_

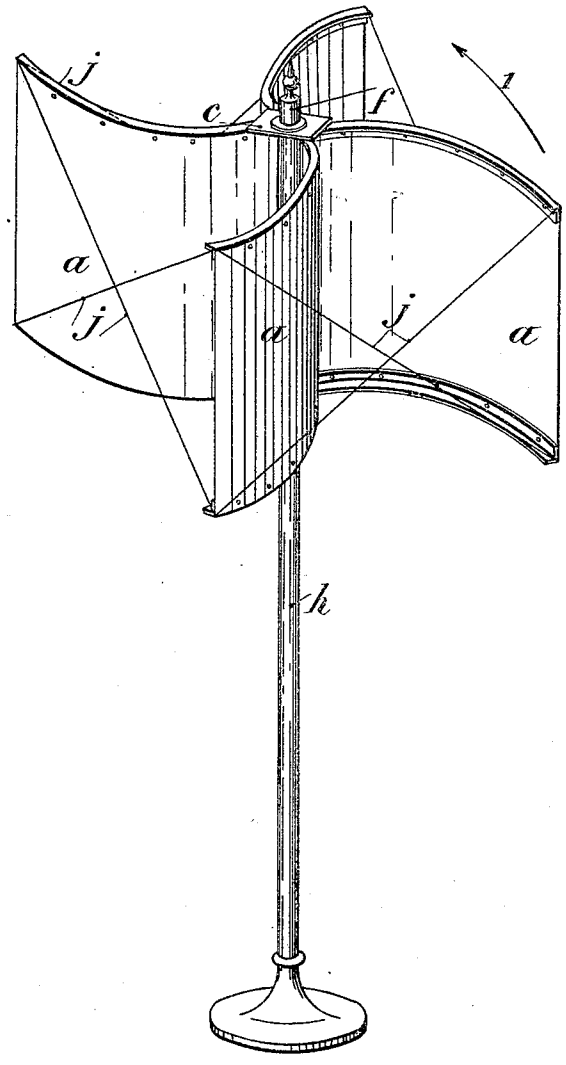

Witnesses:-
C Carson Franck
Hilda Feuer

Inventor:
Gaston Lefèvre
by Otto Munk
his Attorney

ANDREW B. GRAHAM CO., PHOTO-LITHOGRAPHERS, WASHINGTON, D. C.

G. LEFÈVRE.

ROTATING ADVERTISING APPARATUS.

APPLICATION FILED JUNE 1, 1909.

954,525.

Patented Apr. 12, 1910.

4 SHEETS—SHEET 3.

FIG_4_

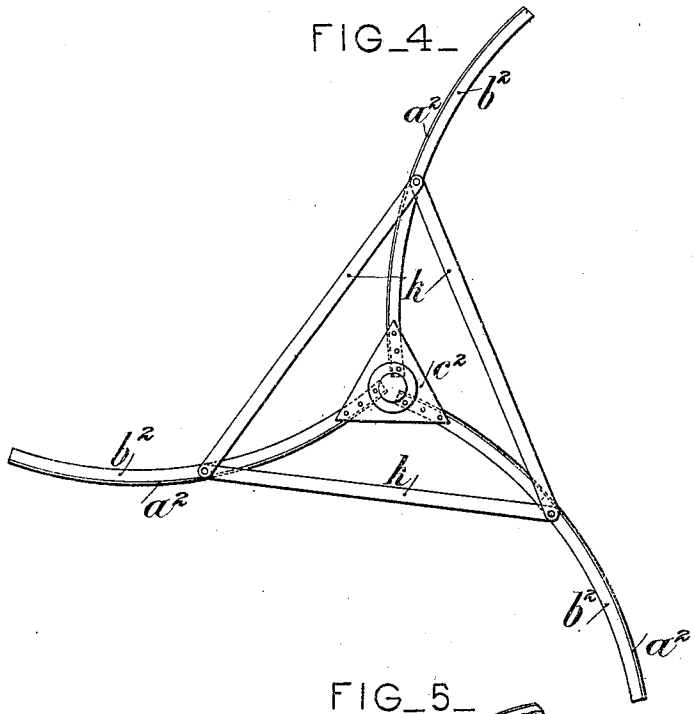

FIG_5_

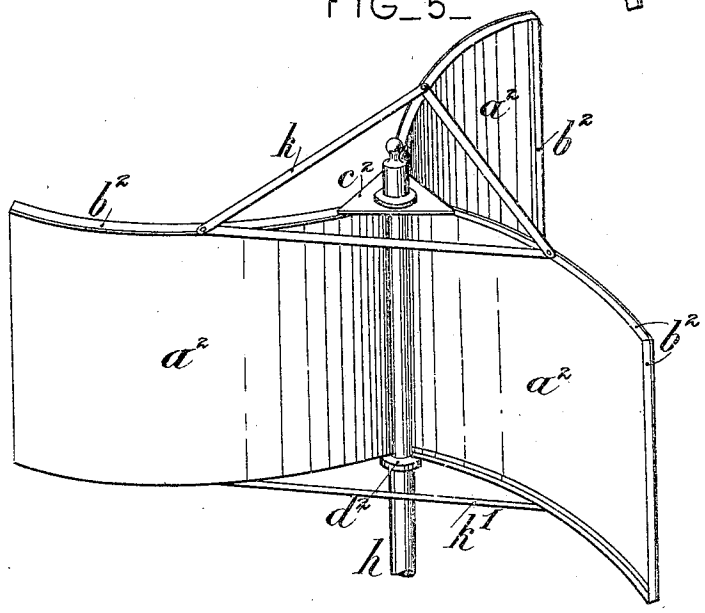

Witnesses:-

Clarissa Franck

Helda Feiner

Inventor:-

Gaston Lefèvre

by

his Attorney

ANDREW B. GRAHAM CO., PHOTO-LITHOGRAPHERS, WASHINGTON, D. C.

G. LEFÈVRE.

ROTATING ADVERTISING APPARATUS.

APPLICATION FILED JUNE 1, 1909.

954,525. Patented Apr. 12, 1910.

4 SHEETS—SHEET 4.

FIG_6_

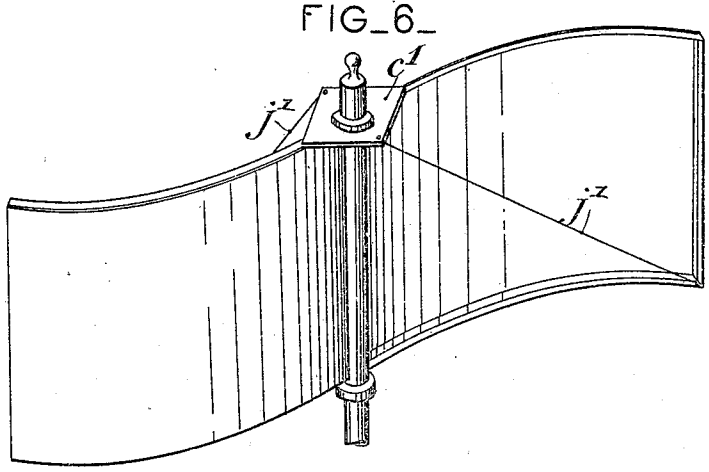

FIG_7_

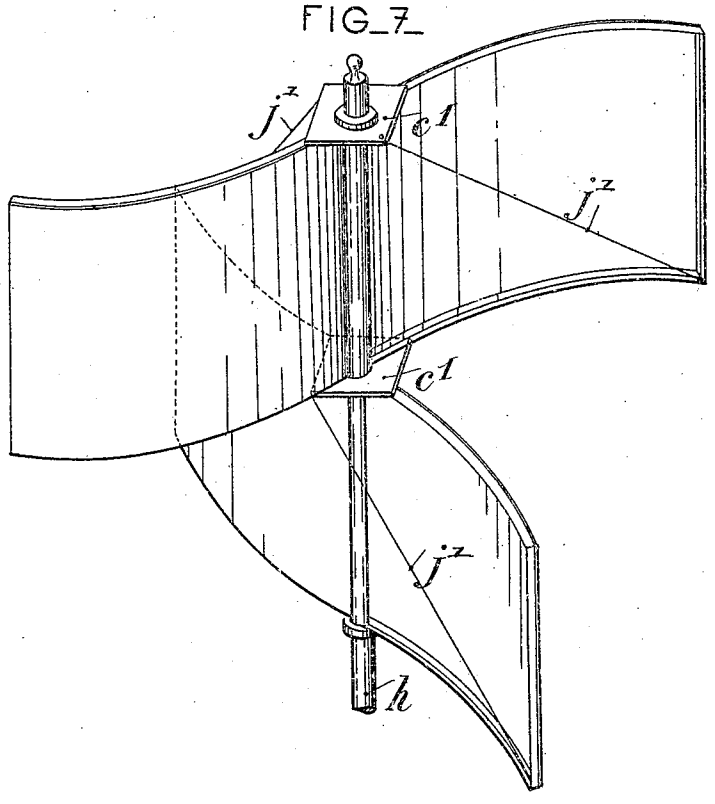

Witnesses:
Clarissa Franck
Hilda Feuer

Inventor:
Gaston Lefèvre
by Atkinson
his Attorney

ANDREW B. GRAHAM CO., PHOTO-LITHOGRAPHERS, WASHINGTON, D. C.

UNITED STATES PATENT OFFICE.

GASTON LEFÈVRE, OF HAVRE, FRANCE.

ROTATING ADVERTISING APPARATUS.

954,525. Specification of Letters Patent. Patented Apr. 12, 1910.

Application filed June 1, 1909. Serial No. 499,500.

To all whom it may concern:

Be it known that I, GASTON LEFÈVRE, citizen of France, residing at 7 Rue de la Bourse, Havre, Seine Inférieure, in the Republic of France, have invented new and useful Improvements in Rotating Advertising Apparatus, of which the following is a specification.

This invention relates to a rotating apparatus for advertising purposes having two or more rectangular wings made of very light sheet metal and strengthened by angle iron frames. Said wings are in the form of curved surfaces having a vertical straight generatrix line so as to impart to the apparatus a rotary motion under the action of the lightest wind, the wings being secured together by means of two upper and lower plates. The upper plate has a pivot bearing fixed thereto which rotates on the upper conical end of the vertical post of the apparatus and the lower plate is provided with a centering bushing surrounding said post. The wings are braced together by means of wires drawn between the outer edges of the same.

In the annexed drawings, Figure 1 is a side elevation of the apparatus with four wings, a portion of the post or support thereof being removed, Fig. 2 is a plan view, Fig. 3 is a perspective view of the construction shown in Fig. 1, Figs. 4 and 5 are a plan and a perspective view respectively, of an apparatus with three wings, Figs. 6 and 7 show two modified forms of the apparatus.

As shown in Figs. 1 to 3, the four wings a are mounted at right angles and made of a very thin and light sheet iron. Said wings are strengthened or reinforced all over their edge by means of an angle iron b and formed by curved surfaces with straight vertical generatrices. The wings are secured together by square plates c d, bolted or riveted thereto. To the plate c is secured an inverted cup bearing f of cast iron, in the bottom of which is a steel washer g which bears and rotates on the conical end h^1 of the supporting rod h. The plate d is bored centrally and provided with a centering bushing or sleeve i having a hole of a diameter slightly greater than that of the rod or post h. The four wings a are maintained at right angles by wires j extending diagonally between the outer edges of the wings as shown in Figs. 1 and 2. As a result of the S shape of the wing pairs a, the apparatus is given an impulse and begins to rotate as shown by the arrow 1 (Fig. 3) even under the action of a very moderate wind.

According to the invention, I may also provide the apparatus with three curved wings a^2 as shown in Figs. 4 and 5. Said wings are also reinforced by angle iron bars b^2 and secured to a triangular plate c^2 and a ring d^2. They are braced together by means of flat bars k and k^1 secured by their ends to the middle of the upper and lower angle iron bars b^2. The length of the wings may thus be increased without any disadvantage. The wires j may be dispensed with, the rotating part of the apparatus being mounted as described with reference to Figs. 1, 2, 3.

The apparatus shown in Fig. 6 has only two wings, the plate c^1 is of a square form as in the first construction described, the two free corners which are not used for securing the wings receive one end of a wire j^1 extending diagonally in front of each wing, on the concave side thereof, the free end of which being secured to the lower outer corner of the corresponding wing.

As shown in Fig. 7, I can also provide the apparatus with two pairs of wings, each pair being constructed as in the construction of Fig. 6. In this case, the two pairs of wings are preferably mounted at right angles as shown.

Having now described my invention, what I claim as new and desire to secure by Letters Patent is:

In a revolving sign, the combination with a supporting post having an upper conical end, of a plurality of wings carried by and revoluble about the post, upper and lower plates securing said wings together, an inverted cup bearing on the upper plate, a metallic washer in the bearing designed to bear upon the conical end of the post, and a ring on the lower plate through which the post passes.

In testimony whereof I have signed my name to this specification in the presence of two subscribing witnesses.

GASTON LEFÈVRE.

Witnesses:

ANTOINE LAVOIX,

DEAN M. NASON.