Jan. 25, 1955 J. DUNGLER 2,700,226

DRYING OR LIKE TREATMENT APPARATUS FOR WEB MATERIAL WITH FLUID DEFLECTING BAFFLE MEANS

Filed Sept. 2, 1950 5 Sheets-Sheet 1

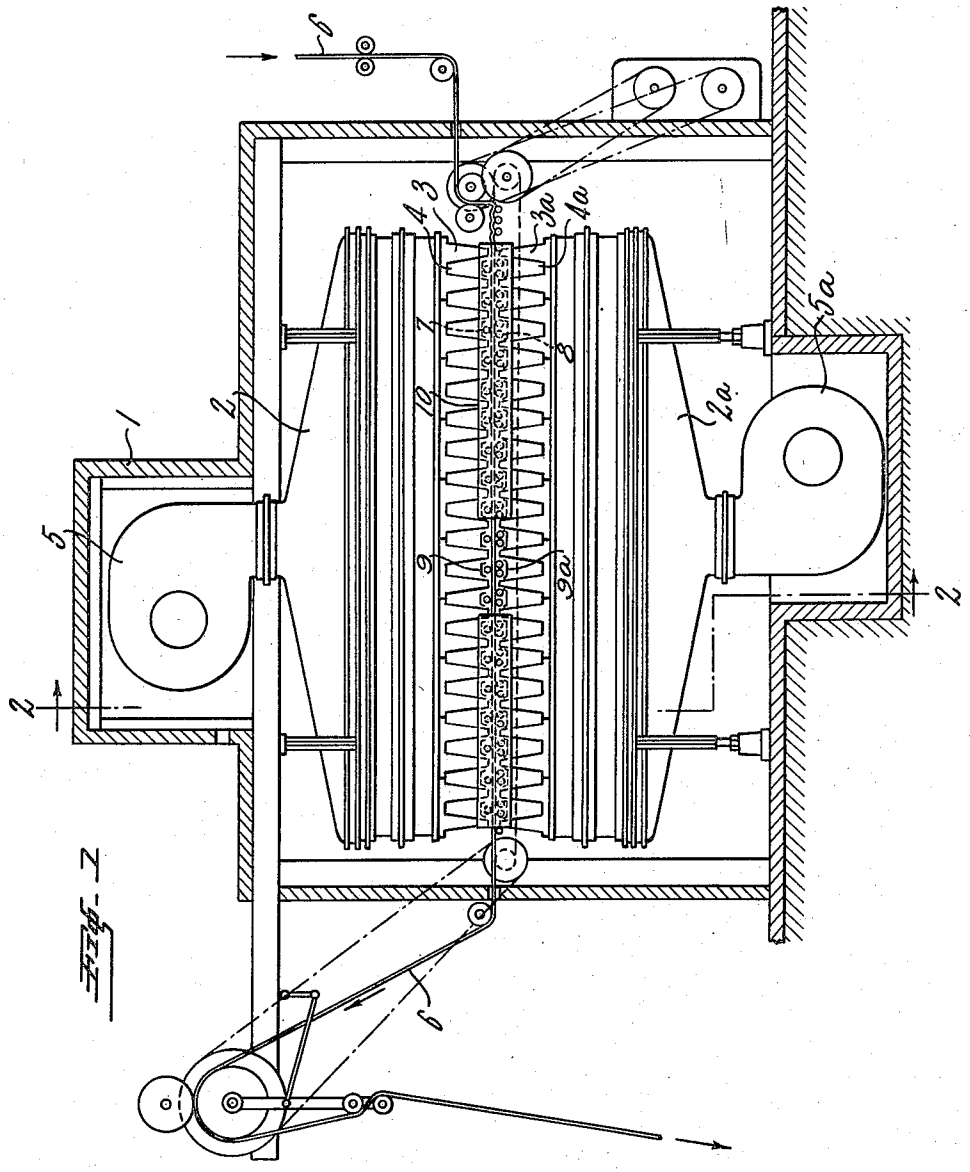

INVENTOR.
JULIEN DUNGLER
BY Helen M. Strauss
AGT.

Jan. 25, 1955 J. DUNGLER 2,700,226

DRYING OR LIKE TREATMENT APPARATUS FOR WEB MATERIAL WITH FLUID DEFLECTING BAFFLE MEANS

Filed Sept. 2, 1950 5 Sheets-Sheet 2

Fig. 2

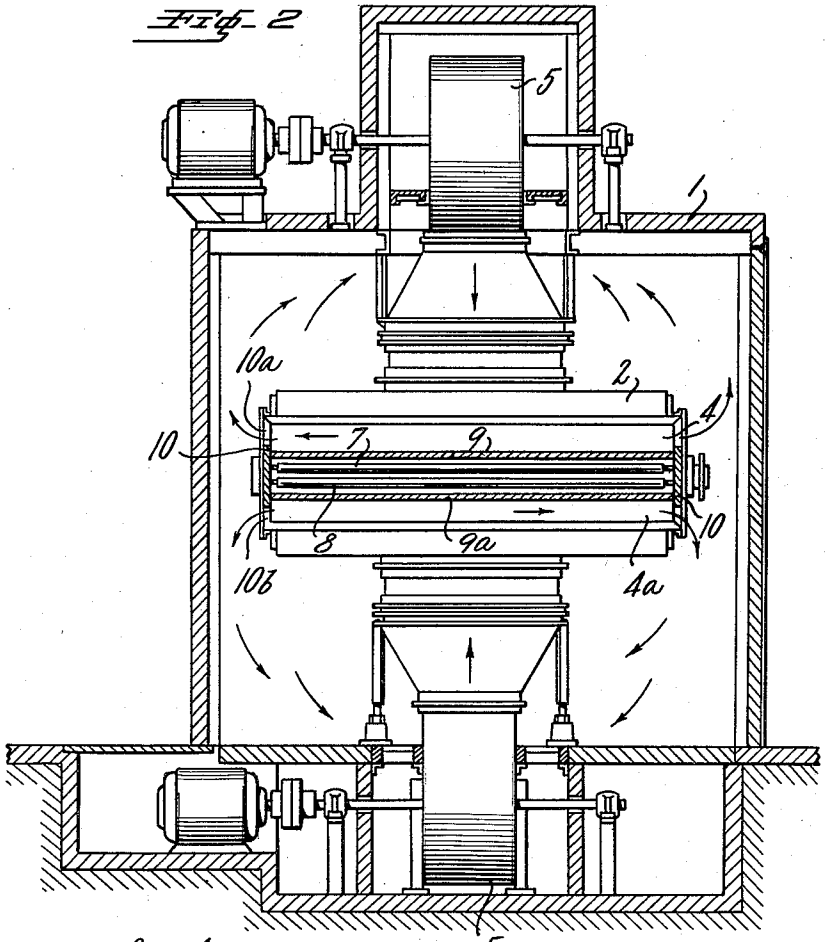

Fig. 3

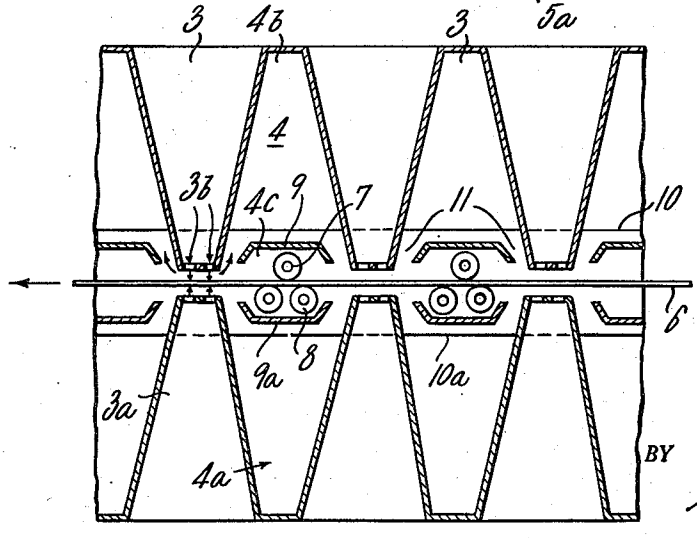

INVENTOR.
JULIEN DUNGLER
BY
Melon M. Straus
ATT.

Jan. 25, 1955 J. DUNGLER 2,700,226

DRYING OR LIKE TREATMENT APPARATUS FOR WEB MATERIAL WITH FLUID DEFLECTING BAFFLE MEANS

Filed Sept. 2, 1950 5 Sheets-Sheet 3

Fig. 4

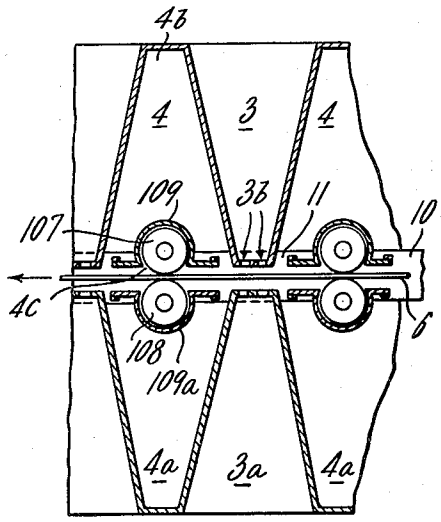

Fig. 6

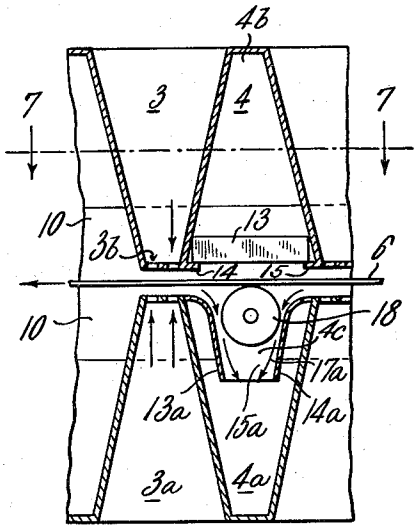

Fig. 5

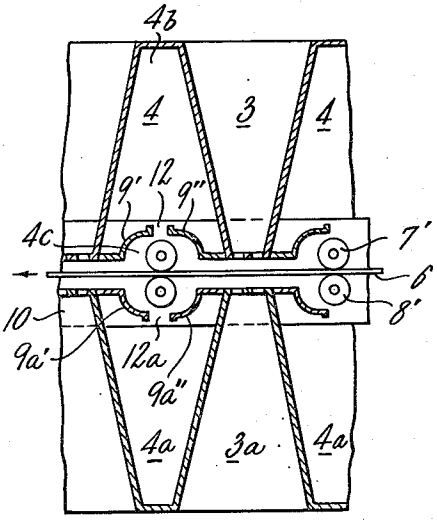

Fig. 7

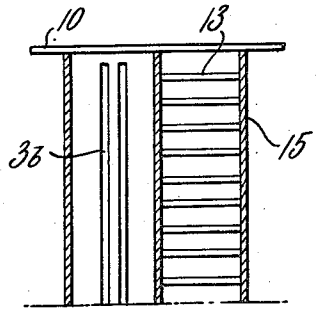

INVENTOR.
JULIEN DUNGLER
BY Leon M. Strauss
AGT

Jan. 25, 1955 J. DUNGLER 2,700,226

DRYING OR LIKE TREATMENT APPARATUS FOR WEB MATERIAL WITH FLUID DEFLECTING BAFFLE MEANS

Filed Sept. 2, 1950 5 Sheets-Sheet 4

Fig. 8

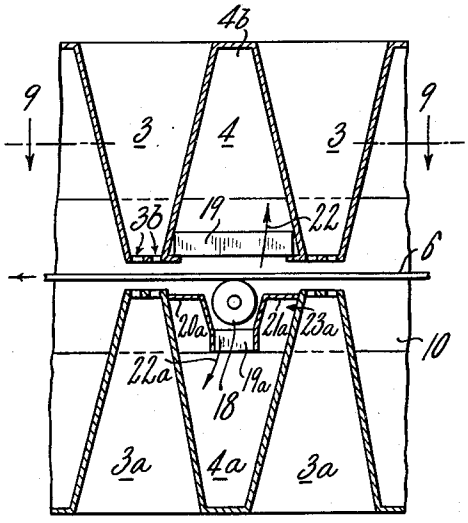

Fig. 10

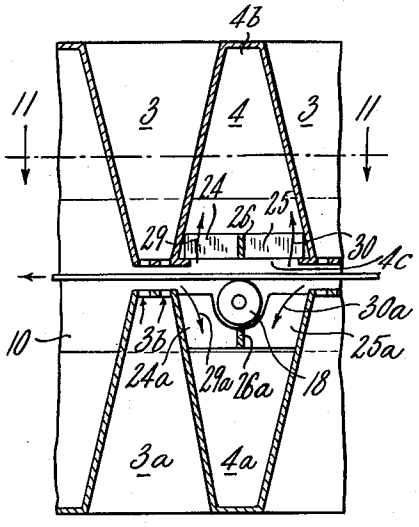

Fig. 9

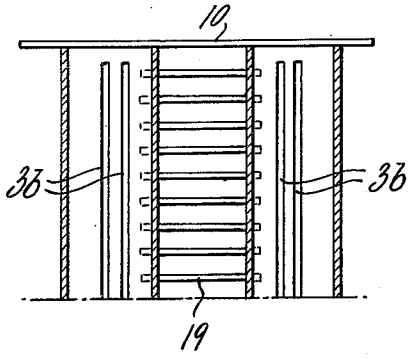

Fig. 11

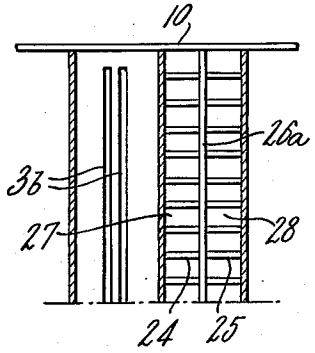

INVENTOR.
JULIEN DUNGLER
BY Leon M. Strauss
AGT.

Jan. 25, 1955 J. DUNGLER 2,700,226

DRYING OR LIKE TREATMENT APPARATUS FOR WEB MATERIAL WITH FLUID DEFLECTING BAFFLE MEANS

Filed Sept. 2, 1950 5 Sheets-Sheet 5

Fig. 12

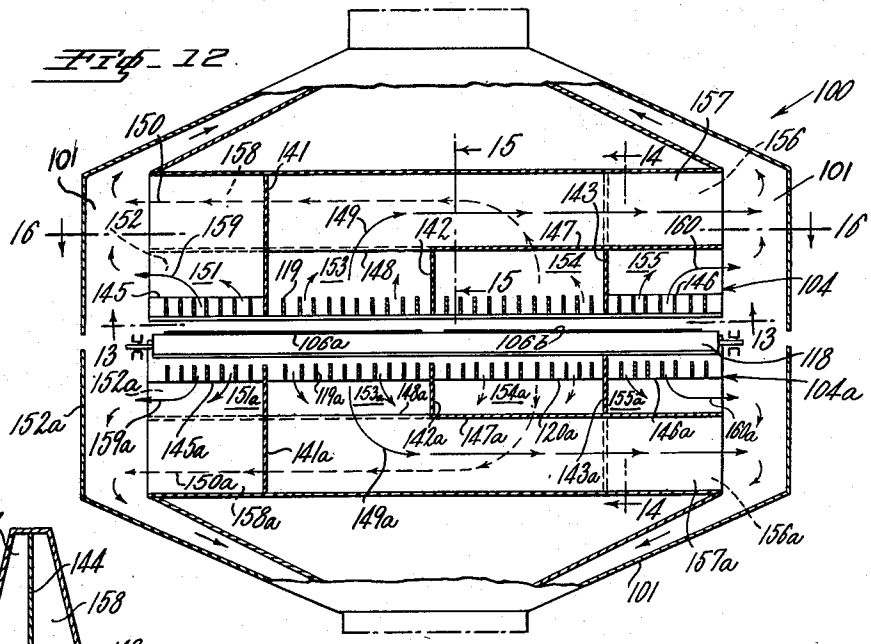

Fig. 15

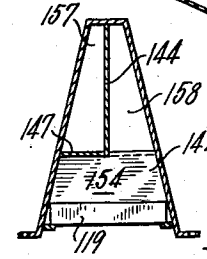

Fig. 16

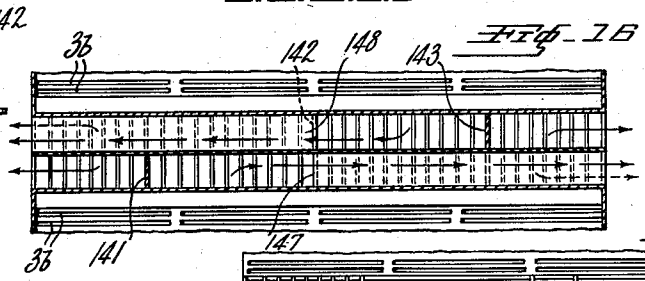

Fig. 13

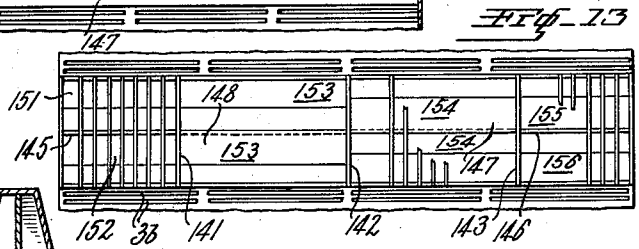

Fig. 14

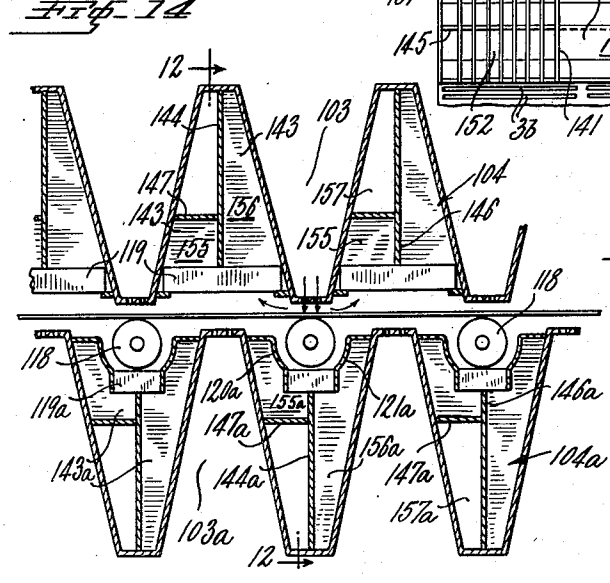

Fig. 14a

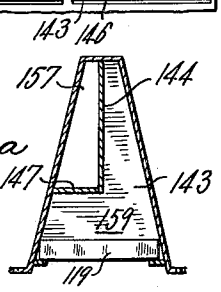

INVENTOR.
JULIEN DUNGLER
BY Leon M. Strauss
Atty.

United States Patent Office 2,700,226 Patented Jan. 25, 1955

2,700,226

DRYING OR LIKE TREATMENT APPARATUS FOR WEB MATERIAL WITH FLUID DEFLECTING BAFFLE MEANS

Julien Dungler, Basel, Switzerland

Application September 2, 1950, Serial No. 183,036

Claims priority, application France April 21, 1950

16 Claims. (Cl. 34—160)

The present invention relates to an apparatus for the treatment of elongated materials, such as paper, fabric and like cellulose products in web form, by means of spaced discharge nozzles through which a treatment fluid is directed to impinge upon one or both surfaces of such elongated material, the fluid being thereafter removed through exhaust or evacuation channels provided between adjacent nozzles.

More specifically, the invention is applicable to a drying apparatus of the general character set forth above wherein the evacuation channels extend substantially at right angles to the direction of travel of the object to be treated. These channels alternate with similarly extending fluid discharge nozzles to which a treatment (e. g. drying) fluid is supplied by suitable blower means serving to circulate and to recirculate all or part of the spent fluid through the nozzles after the fluid has been removed from the treated object or material and its vicinity by way of the evacuation channels.

Although, in such systems, it has been the practice to design the nozzles in such manner that the fluid will impinge substantially perpendicularly upon the surface or surfaces of the treated object, or at an inclination to the direction of travel of the object, but without having any component of velocity transverse to that direction and parallel to the surface of the object, the outflow of the fluid in the evacuation channels proceeds essentially in such transverse direction and parallel to the surface.

If, in such machines, no means are provided for positively guiding the selvedges, that is to say, if the material to be treated rests freely and without tension on or between supporting rollers or like guide devices, the forces exerted upon the material by the outflowing fluid may easily cause displacement of the material, tending to interfere with the operation of the machine.

This effect will be of particular importance where, as is frequently the case, two or more strips of fabric or other material pass alongside one another for simultaneous treatment. In such cases the fluid is likely to force adjacent strips of material apart, thereby displacing them toward the sides of the machine and causing portions of these strips to curl or overlap each other so as to escape or to be only incompletely exposed to the drying, impregnating or other action of the treatment fluid.

It is, therefore, a general object of this invention to provide means preventing any lateral displacement of the material while the material is guided substantially tensionless through the drier.

More particularly, it is an object of the present invention to provide means enabling the discharge or flow of the treatment fluid or at least part of the fluid to be directed to a zone adjacent the surface of the material and substantially perpendicular to such surface.

It is also an object of the invention to provide means facilitating guidance of the discharged treatment fluid so that at least part of this fluid passes perpendicular or at right angles to the surface of the treated material in the immediate vicinity thereof and directing said fluid parallel to this surface only at a predetermined distance from the location of impingement on the treated material.

According to a specific feature of the invention, the aforesaid means for guiding the fluid include one or more separators or baffles extending, in each evacuation channel, substantially parallel to the surface of the material under treatment and at a predetermined, preferably regulatable, distance therefrom, in such manner as to subdivide each evacuation channel into two superposed compartments, these superposed compartments being in communication with each other.

The invention further contemplates the provision of stop means for reducing or completely preventing any fluid circulation parallel to the surface of the material or product under treatment in the compartment adjacent the treated product, the two compartments being interconnected by suitable passageways. Preferably, the volume of the compartment in the exhaust channel extending next to the product under treatment should be considerably smaller than that of another compartment which is more distant from the treated material.

According to another feature of the invention, the separating elements are in the form of baffles disposed in the evacuation or exhaust channels substantially parallel to and a predetermined distance from the surface of the treated product, the aforesaid stop means including strips placed at the ends of these channels in such manner as to form a more or less complete closure for the compartment adjacent the treated product.

According to a further feature of the invention, the aforesaid stop means include cross plates disposed inside the evacuation channels or passages between the lower and upper compartments thereof, these cross plates extending substantially perpendicular to the surface of the lengthy product under treatment and parallel to the direction of displacement or path of the product. In a specific embodiment the cross plates are positioned close to the surface of the product under treatment; in another embodiment the cross plates are supplemented by partitions dividing each evacuation or exhaust channel into a plurality of sections, there being provided a plurality of ducts through which the fluid from respective sections is forced to flow out in different directions.

According to still another feature of the invention, the rollers or other devices ensuring the guidance of the treated product through the machine are positioned recessed in the compartment formed by each evacuation or exhaust channel.

According to yet a further feature of the invention, the separating elements and/or stop means are shaped to conform to the configuration of the guiding devices placed in said compartment adjacent to product or material, thereby reducing to a minimum the volume of such compartment.

Communication between the superposed or adjacent compartments of the evacuation channels may take place by way of apertures of suitable form and number which may be provided in the separating elements or baffles dividing these compartments. According to the invention the aforesaid baffles may assume a width less than that of the evacuation channels at the level or location of said baffles, so as to leave spaces between them and the walls defining said channels.

These and other objects and features will become more fully apparent from the following description, reference being had to the accompanying drawings in which:

Fig. 1 is a longitudinal elevation, partly in section, of an improved drying machine according to the present invention;

Fig. 2 is a cross section taken along the line 2—2 of Fig. 1;

Fig. 3 is a fragmentary cross section on an enlarged scale, showing details of the nozzle arrangement seen in Figs. 1 and 2;

Fig. 4 is a view similar to that of Fig. 3, showing a modified structure;

Fig. 5 is another view similar to that of Fig. 3, disclosing a further modified structure;

Fig. 6 illustrates an embodiment similar to those of Figs. 3–5, however, with partitions disposed adjacent the communication passageways between the lower and upper compartments of the exhaust channels;

Fig. 7 is a horizontal section taken along the line 7—7 of Fig. 6;

Fig. 8 is a view similar to that of Fig. 6, but showing still another modified structure;

Fig. 9 is a horizontal section taken along line 9—9 of Fig. 8;

Fig. 10 is another view similar to that of Fig. 6, illus-

trating an embodiment wherein the lower and upper compartments are not divided by any separating member extending in transverse direction thereto;

Fig. 11 is a horizontal section taken along line **11—11** of Fig. 10;

Fig. 12 shows schematically a modified cloth drying machine in vertical section, taken substantially along the line **12—12** of Fig. 14;

Fig. 13 is a bottom plan view of the upper portion of the machine of Fig. 12, taken along the line **13—13** thereof;

Fig. 14 is a section taken along the line **14—14** of Fig. 12 and drawn to an enlarged scale;

Fig. 14*a* is a fragmentary section similar to that of Fig. 14 and showing part of the structure thereof in modified form;

Fig. 15 is a section taken along the line **15—15** of Fig. 12 and drawn to the same scale as Figs. 14 and 14*a*; and

Fig. 16 is a horizontal section taken along the line **16—16** of Fig. 12.

Referring now more particularly to the drawings and specifically to Figs. 1 and 2, there is disclosed a drier made according to the invention and having a thermally insulated chamber **1**, the interior of which contains an upper and a lower blower box **2** and **2***a*, respectively, these blower boxes being provided, at their surfaces facing each other, with fluid discharge nozzles **3** and **3***a*, respectively. The individual nozzles of each box comprise trapezoidal portions provided with blowing orifices **3***b* (Fig. 3) and separated by evacuation or exhaust channels **4** and **4***a*, respectively, these channels communicating at their ends with the chamber **1**. Blowers **5** and **5***a* supply a drying fluid to the boxes **2** and **2***a*, respectively.

The fabric or like material to be dried, passing between the opposing nozzles **3** and **3***a*, is supported and guided along its path through the machine by upper rollers **7** and lower rollers **8** positioned on opposite sides of the fabric **6** in the exhaust channels **4** and **4***a*, respectively.

In the operation of a machine equipped in the manner set forth above, the supplied drying fluid is projected from nozzles **3**, **3***a* through the orifices **3***b* thereof upon the opposite surfaces of the cloth **6** and in a direction substantially perpendicular to the travel or principal dimension of the cloth. After having thus acted upon the fabric, the spent drying fluid is removed, together with vapors liberated from the imbued or impregnated fabric under the action of this fluid, through the evacuation channels **4** and **4***a* which open freely into the chamber **1** at their ends; these vapors are then either removed from the chamber by suitable means or recirculated through the nozzles by means of the blowers **5** and **5***a*.

Although the high-pressure fluid discharged by the nozzles **3**, **3***a* moves substantially at right angles to the surfaces of the fabric, thereby forcing it against its supporting rollers **7**, **8**, the low-pressure fluid flowing out within the channels **4** and **4***a* travels parallel to the surface of the fabric and also at right angles to the direction of travel of the fabric. It will thus be seen that there are exerted forces upon the fabric, due to the outgoing or exhaust fluid streams, which forces tend to cause lateral displacement of the fabric which is not retained or held at its selvedges but is merely guided by and between the rollers **7** and **8**.

Particularly, if several parallel strips or webs of fabric or like material are treated simultaneously in a single chamber **1**, the aforesaid forces will contribute to objectionable results since each strip or web of material will be displaced toward the sides of the chamber, so that superposition of the selvedges of adjacent strips, formation of longitudinal plies in the webs and other undesirable effects may ensue.

According to the invention, and as clearly shown in Figs. 1, 2 and 3, this drawback is eliminated by providing fluid deflecting plates or baffles **9**, **9***a* extending transversely to the path of travel of the fabric at a predetermined distance therefrom, said deflecting plates being generally horizontal and having opposite surfaces, one of which faces the product **6** and the other of which is remote from and faces away from the product. The surface facing the product **6** includes a portion which is recessed or set back into the channels **4**, **4***a*, respectively, as shown, for directing fluid discharged through the nozzles after having acted on the product (spent fluid). This last mentioned surface portion is disposed at a greater distance from the product or material under treatment than the discharge ends **3***b* of the nozzles.

Furthermore, substantially vertical closure plates or boards **10**, **10***a*, extending in regard to the evacuation channels a predetermined height of the latter and perpenducularly to the surfaces of the product under treatment, project approximately to the level of the aforesaid deflecting plates **9**, **9***a*. These closure plates are disposed alongside the faces of the lateral end walls defining the nozzle members **3**, **3***a*, these closure plates being in contact with these walls of said nozzle members adjacent opposite side edges of the product or fabric **6**. The deflecting plate means, therefore, are located substantially within a space defined by the product under treatment and the aforesaid closure plate means positioned adjacent the evacuation channels, respectively.

It should be noted that the total width of the baffles **9** and **9***a* (including their angular or horizontal portions and upwardly raised portion or portions, Figs. 3, 5, 6) is less than that of the evacuation or exhaust channels **4** and **4***a* at the level of these baffles, transverse slots **11** being defined between the transverse ends of these baffles and the adjacent walls of the exhaust channels. It will also be seen that the baffles **9** and **9***a* subdivide each channel **4**, **4***a* into two compartments, namely, an outer compartment **4***b* more remote from the fabric **6**, being the upper compartment in the case of channel **4**, and an inner or lower compartment **4***c* adjacent the fabric, representing the lower portion of channel **4**. The supporting or guide means **7**, **8**, which may also serve to impart forward movement to the fabric, are located inside the inner compartments **4***c*.

The system according to the invention operates as follows:

The inner compartment **4***c* of each upper and lower channel **4**, **4***a* is closed at its ends by the laterally and vertically extending side boards or closure plates **10** so that little or no transverse circulation may take place therein. As a result, a space is defined between the discharge ends **3***b* of the nozzles and the surface of the product under treatment, vertically spaced from the nozzle discharge ends, this space being laterally obstructed by the aforesaid closure plates **10**, **10***a* which are spaced from each other as clearly seen in Fig. 2. The drying fluid discharged by the nozzles **3** and **3***a* as well as the vapors liberated from the fabric pass through the slots **11** in substantially perpendicular direction to the surfaces of the product under treatment into the compartments **4***b* which, at their extremities, open freely into the chamber **1**. While, thus, the flow of the fluid is directed to these portions of the exhaust channels in essentially the same manner as before, i. e. in a transverse direction, this flow cannot effect any lateral displacement of the web material **6** since it is spaced therefrom by the compartment **4***c* in which the transverse flow component is absent or negligible. Furthermore, inasmuch as the compartments **4***c* are materially smaller than the compartments **4***b*, the removal of the spent fluid is not appreciably affected by the presence of the strips **9**, **9***a* and **10**.

It will further be understood that the major portion of the spent fluid to be removed consists of the drying medium discharged by the nozzles **3** and **3***a* through orifices **3***b* and after such drying machine has completed its action upon the fabric or product. Since the slots **11**, through which the inner and outer compartments **4***c* and **4***b* communicate with each other, are situated close to the discharge nozzles, the spent drying fluid may easily escape through these slots.

Fig. 2 clearly shows how a connection between the compartments **4**, **4***a* and the interior of chamber **1** is established at **10***a* and **10***b* above and below each side board **10**. It will be appreciated that such an arrangement enables the removal of the spent fluid without giving rise to any objectionable force tending to displace the fabric.

In the modification shown in Fig. 4, the baffles **109** and **109***a* conform to the shape of the guide rollers **107**, **108**, thereby reducing to a minimum the volume of the compartments **4***c* which do not participate in the removal of the fluid.

Fig. 5 shows another modification wherein the separating elements are represented by baffle members **9'**, **9''** and **9***a'*, **9***a''*, respectively. These members are fixed to the side walls of the evacuation channels and are of such configuration as to leave between them, in the cen-

ter of the channels, communication passages **12** and **12***a*, respectively, between the inner and outer compartments **4***c* and **4***b* thereof.

The baffles **9'**, **9''**, **9***a'* and **9***a''* are curved in such manner as to provide room for the mounting of guiding or supporting means, or similar auxiliary devices, such as the rollers **7'** and **8'**.

The modifications shown in Figs. 6 through 11 illustrate the provision of means for more effectively preventing the formation of transverse flow components adjacent the surface of the treated web product. These modifications, accordingly, include additional flow-impeding elements positioned inside the evacuation channels between the inner and outer compartments thereof.

In the embodiment of Figs. 6 and 7 there are provided a set of parallel cross plates **13** mounted on inwardly directed projections **14**, **15** of the side walls of each evacuation channel **4**. Each lower channel **4***a* contains transverse baffles or separators **13***a*, **14***a* which are so curved in outward direction and toward each other as to form between them a chimney-like aperture **15***a* connecting the inner compartment **4***c* of each exhaust channel with the outer compartment **4***a* thereof. As in the preceding embodiments, these baffles or separators are joined at their ends to the obstructions or stop boards **10** extending alongside the blower assemblies.

The cross plates **13** in the upper exhaust channel **4** extend parallel to the direction of displacement of the treated web product **6** and substantially perpendicular to the surface thereof; thus they prevent any establishment of fluid flow transversely to the direction of movement or travel of the treated web product **6** but allow the passage of fluid streams in a generally outward or upward and downward direction.

It will be seen that the arrangement just described more effectively than the preceding ones suppresses undesirable flow components while affording a very large area within which communication between the inner and outer exhaust channel compartments may take place. Furthermore, the outwardly flared formation of the baffle members **13***a* and **14***a* provides the necessary space for mounting auxiliary devices therein, such as guide rollers **18**, the fluid passing around these rollers and out through the chimneys **15***a*, as indicated by the arrows **17***a*.

In the modification of Figs. 8 and 9 the baffle members or separators **20***a* and **21***a* in the lower exhaust channel **4***a* are similar to the baffle members **13***a* and **14***a* of Fig. 6. Between these baffle members **20***a* and **21***a* there are located a number of cross plates **19***a* oriented in the direction of travel of the treated web product **6** and at right angles to its surface. These cross plates **19***a*, together with cross plates **19** which are located in the upper exhaust channel **4** and are similar to the cross plates **13** of Figs. 6 and 7, and likewise impede all transverse fluid flow while guiding the spent fluid outwardly in the direction of the arrows **22** and **22***a*, respectively. The arched form of the baffle members **20***a* and **21***a* creates a space allowing for the mounting of auxiliary devices, such as rollers **18**, without interference with the removal of the fluid.

The modification of Figs. 10 and 11 illustrates how a separation between the inner and the outer compartments of the exhaust channels can be accomplished solely by the sideboards **10** and by a plurality of intermediate stop elements or directional plate members positioned at right angles to the surfaces of the cloth. These elements include cross plates **24**, **25** and **24***a*, **25***a* extending between the side walls of the evacuation channels and a pair of transverse, central supporting strips **26**, **26***a*, respectively.

These stop elements are again oriented longitudinally with respect to the main dimension or direction of travel of the web **6** and perpendicular to its surface, thereby forming a plurality of vertical, elemental chimneys, such as **27** and **28**.

In this embodiment the cross plates **24**, **25** and **24***a*, **25***a* cause the fluid to flow out substantially at right angles to the surface of the treated web product, as indicated by the arrows **29**, **30** and **29***a*, **30***a*, and effectively prevent the formation of any transverse fluid flow with respect to the travel of the web material. Having entered the outer compartments **4***b* of the exhaust channels **4** or **4***a*, the spent fluid may again move off freely without tending to displace the material **6**.

It should be noted that the arrangement shown in

Figs. 10 and 11 enables a substantial reduction of the depth or volume of the compartment **4***c* wherein the removal of the fluid is slow. Furthermore, it will also be possible to accommodate auxiliary devices, such as the rollers **18**, by suitably cutting away the central strip and the transverse partition of any of the exhaust channels, as shown, for example, with respect to the strip **26***a* and the partitions **24***a*, **25***a* of exhaust channel **4***a*.

Figs. 12–16 show a form of cloth drier according to the invention wherein special dividing means have been disposed in the exhaust channels to guide the outflowing fluid away from the cloth in a direction substantially perpendicular thereto and then to remove the fluid from each channel in two oppositely directed streams parallel to the surface of the cloth.

The drier **100** comprises upper and lower nozzles **103**, **103***a* and upper and lower exhaust channels **104**, **104***a*, respectively. The exhaust channels specifically disclosed are similar to those shown in Figs. 8 and 9 in that the upper channels **104** are provided with sets of parallel cross plates **119** and that the lower channels **104***a* are provided with chimney-forming baffle members **120***a*, **121***a* between which extend additional cross plates **119***a*. Rollers **118**, serving as tensionless supports for the cloth, are disposed between the suitably curved baffle members **120***a* and **121***a*.

The drier **100** is adapted for the simultaneous processing of two strips of cloth **106***a*, **106***b* passing alongside each other over the rollers **118**. Each channel **104**, **104***a* is subdivided by means of transverse partitions **141**, **142**, **143** and **141***a*, **142***a*, **143***a*, respectively, and longitudinal partitions **144**, **145**, **146**, **147** and **144***a*, **145***a*, **146***a*, **147***a*, respectively. The transverse partitions **142**, **142***a* are centrally positioned and are aligned to each other, thereby dividing each channel into identical but inversely oriented halves.

Longitudinal partitions **144**, **144***a* are perpendicular to the cloth and extend over the entire length of the channels **104**, **104***a*, respectively. The members **147**, **147***a* are parallel to the cloth and extend from the center partition **142**, **142***a* to the left-hand end of the channels **104**, **104***a*, respectively, thus past the partitions **141**, **141***a*; they cover the portions of these channels extending from the center line to one of the side walls thereof.

Similarly, the members **148**, **148***a* are parallel to the cloth and extend from the center partition **142**, **142***a* to the right-hand end of the channel, thus past the partitions **143**, **143***a*; they cover the portions of these channels extending from the center line to the other side walls thereof. It will be noted that the partition members **147**, **147***a* and **148**, **148***a* effectively divide each of the channels **104**, **104***a* into an inner and an outer compartment, in analogy with the preceding embodiments, each outer compartment being longitudinally split by the members **144**, **144***a* which terminate at the level of the horizontal partitions **147**, **147***a* and **148**, **148***a* as clearly seen in Figs. 12 and 15.

The longitudinal partitions **145**, **145***a* form extensions of the members **144**, **144***a*, respectively, into the inner channel compartments but extend only from the left-hand end of these compartments to the nearest transverse partition **141**, **141***a*, respectively. Similar extensions of the members **144**, **144***a* are formed by the longitudinal partitions **146**, **146***a*, respectively, which extend only from the right-hand end of the inner compartments to the nearest transverse partition **143**, **143***a*, respectively.

The inner or lower compartment of channel **104** is thus divided into six sections **151** to **156**. Sections **151**, **152** extend from the left-hand end of the channel to the partition **141** and are separated from each other by the member **145**; section **153** extends between the partitions **141** and **142**; section **154** extends between the partitions **142** and **143**; and sections **155**, **156** extend from the right-hand end of the channel to the partition **143** and are separated from each other by the member **146**. Similar sections **151***a*—**156***a* are formed in the inner or upper compartment of channel **104***a* by corresponding partition members.

The center partitions **142**, **142***a* terminate at the horizontal members **147**, **148** and **147***a*, **148***a*, respectively, hence do not encroach upon the outer compartments of the respective channels. Partitions **141**, **143** and **141***a*, **143***a* extend, however, into these outer compartments; partitions **141**, **141***a* obstruct the channel portions opposite members **148**, **148***a* between the longitudinal mem-

bers 144, 144a and respective channel walls; partitions 143, 143a similarly obstruct the channel portions opposite members 147, 147a between these same longitudinal members and other channel walls, respectively. The form of center partition 142 is clearly seen in Fig. 15; the form of side partitions 143, 143a is best apparent from Fig. 14 and is also representative of the form of side partitions 141, 141a which are coextensive with partitions 143, 143a, respectively.

By virtue of the arrangement described, each of the outer compartments of the exhaust channels 104, 104a is divided into two ducts 157, 158 and 157a, 158a, respectively. Duct 157 is defined by the partitions 144, 147 and opens into the chamber 101 at the right-hand end of the channel 104, the left-hand end of the duct being obstructed by the partition 141; duct 158 is defined by the partitions 144, 148 and opens into the chamber 101 at the left-hand end of the channel 104, the right-hand end of this duct being obstructed by the partition 143. The ducts 157a, 158a are coextensive with the ducts 157, 158, respectively, and are bounded by corresponding elements of the channel 104a.

The fluid removed from each exhaust channel passes over four distinct paths. The fluid portions entering sections 151, 152 or 151a, 152a pass directly into the chamber 101 at the open left-hand end of the respective channel, as indicated by the arrows 159, 159a, respectively.

The fluid portions entering sections 155, 156 or 155a, 156a pass directly into the chamber at the open right-hand end of the channel, as indicated by the arrows 160, 160a, respectively. The fluid portions entering section 153 or 153a reach the duct 157 or 157a, respectively, and pass through the open right-hand end of this duct into the chamber as indicated by the arrows 149, 149a, respectively. The fluid portion entering section 154 or 154a reaches the duct 158 or 158a, respectively, and passes through the open left-hand end of this duct into the chamber as indicated by the arrows 150, 150a, respectively.

The extensions 145, 146 and 145a, 146a may be omitted so that the inner compartment of each exhaust channel will be divided into only four rather than six sections; this has been made clear in Fig. 14a where the channel sections 155, 156, as seen, for example, in Fig. 14, have been merged into a single section 159.

In the embodiment of Figs. 12 to 16 the fluid removed from the vicinity of the strips 106a, 106b will be positively guided in such manner that fluid streams having a surface-parallel component in one direction will alternate with fluid streams having a surface-parallel component in opposite direction. Any tendency of the fluid flow to displace the cloth, and in particular any tendency to force apart the two parallel strips 106a, 106b under treatment, will thereby be effectively eliminated.

It will, of course, be understood that the apparatus 100 will also be suitable for the treatment of a single strip of cloth, such as the strip 6 of the preceding embodiments, in lieu of the two parallel strips 106a, 106b, such single strip extending over substantially the entire length of the exhaust channels 104, 104a.

It is to be understood that the embodiments herein described and shown in the drawings have been given merely by way of illustration, and that the shape, character, positioning and mounting of the several elements disclosed may be varied without, thereby, exceeding the scope of this invention. Thus the passages of communication between the inner and outer compartments may be formed, at least in part, by openings of suitable number and shape provided in the baffle members or separators to supplement or replace the passages shown, for example, at 11 (Fig. 3) or 12 (Fig. 5).

The side boards 10 need not be solid but may be apertured, as indicated at 10a, 10b in Fig. 2, if it be desired that transverse fluid flow adjacent the surfaces of the treated web product be not completely cut off, and all the apertures or passages referred to may be made adjustable if desired. Furthermore, such incomplete cutoff of transverse fluid circulation may also be insured by reducing the height of the boards 10 below that of the adjacent compartments 4c. These side boards, moreover, may each consist of a single piece simultaneously obstructing, in whole or in part, the inner compartments 4c of both sets of exhaust channels 4 and 4a, being fixed to one or both of the nozzle assemblies 3, 3a, or they may each comprise two overlapping strips, respectively, secured to the upper and to the lower blower box or nozzle assembly.

Although the invention has been described with reference to certain specific embodiments thereof, it is to be distinctly understood that various modifications and adaptations of the arrangements herein disclosed may be made as may readily occur to persons skilled in the art without constituting a departure from the spirit and scope of the invention as defined in the objects and in the appended claims.

Having thus described the invention, what is claimed as new and desired to be secured by Letters Patent, is:

1. In a machine for the treatment of an elongated cellulosic product by impinging a treatment fluid upon at least one surface of said product when travelling through said machine; in combination, sets of discharge nozzles extending substantially perpendicularly to said surface, evacuation channels extending transversely of the length of said elongated product, each two adjacent sets of discharge nozzles being separated by a respective evacuation channel, fluid deflecting means contained within each channel, said deflecting means being provided with at least one first portion positioned adjacent said surface under treatment and with at least one second median portion connected to said first portion and set back from said latter portion, each channel being divided into a first compartment defined by said first portion and said second portion facing said surface of said product and into a second compartment defined by the remainder of said channel, said fluid deflecting means including at least one slot extending transversely of said elongated product, said first compartment communicating with said second compartment through said slot, whereby said treatment fluid after having acted upon said product is directed by said deflecting means from said first compartment through said slot into said second compartment and thence in the latter substantially at right angles to the travel of said product under treatment, and closure means placed at the lateral ends of said evacuation channel and completely obstructing the lateral ends of said first compartment but leaving substantially unobstructed the ends of said second compartment of each evacuation channel.

2. The combination according to claim 1, including partition means dividing said first compartment into sections, and guide means dividing said second compartment into a plurality of ducts extending in different directions, different ones of said sections communicating with different ones of said ducts.

3. The combination according to claim 2, including guide means for the product to be treated, said guide means being positioned in said first compartment, said median portion of said fluid deflecting means including baffle means substantially conforming to the shape of said guide means and closely spaced therefrom, thereby reducing to a minimum the size of said first compartment.

4. In a machine according to claim 1, including guide means for the product to be treated, said guide means being positioned in said first compartment, said deflecting means substantially conforming to the shape of said guide means and being closely spaced therefrom, thereby reducing to a minimum the size of said first compartment.

5. In a machine for the treatment of an elongated product by the impingement of a treatment fluid upon the surface thereof, in combination, a set of discharge nozzles extending substantially perpendicularly to said surface, said nozzles being separated by at least one evacuation channel extending transversely to the principal dimension of said elongated product, and a set of cross plates in said channel extending substantially perpendicularly to said surface and parallel to said principal dimension, said cross plates being positioned close to said surface and directing the treatment fluid discharged by said nozzles, upon the fluid having acted upon said product, into a portion of said channel remote from said surface in a direction substantially at right angles to said surface.

6. In a machine for the treatment of an elongated product by the impingement of a treatment fluid upon the surface thereof, in combination, a set of discharge nozzles extending substantially perpendicularly to said surface, said nozzles being separated by at least one evacuation channel extending transversely to the principal dimension of said elongated product, at least one baffle member extending completely within said channel and substantially parallel to and spaced from said surface, thereby dividing said channel into a first compartment close to said surface and into a second compartment more remote from said surface, and closure means placed at and completely

obstructing the lateral ends of said first compartment while leaving substantially unobstructed the lateral ends of said second compartment, said baffle member providing at least one passage establishing a connection between said compartments, said passage extending substantially at right angles to said surface, said baffle member being provided with an outwardly curved portion forming a wall of said passage, said passage being provided with a set of cross plates secured to said curved portion and extending substantially perpendicularly to said surface and parallel to said principal dimension.

7. The combination according to claim 6, including two baffle members secured to opposite side walls defining said channel and extending toward each other, said baffle members leaving between them a clearance forming said passage.

8. In a machine for the treatment of an elongated product by the impingement of a treatment fluid upon the surface thereof, in combination, a set of discharge nozzles extending substantially perpendicularly to said surface, said nozzles being separated by at least one evacuation channel extending transversely to the principal dimension of said elongated product, said channel comprising a first portion close to said surface and a second portion more remote from said surface, first partition means dividing said first portion into a plurality of transverse sections, second partition means dividing said second portion into a plurality of longitudinal ducts, different ones of said sections communicating with different ones of said ducts, and a set of parallel plates extending across each of said sections.

9. The combination according to claim 8, wherein said ducts include a first duct open at one end of said channel and a second duct open at the other end of said channel.

10. The combination according to claim 9, wherein said sections include a first section adjacent said one end of said channel and a second section adjacent said other end of said channel, said first section communicating with said second duct, said second section communicating with said first duct.

11. In a machine for the treatment of an elongated product by the impingement of a treatment fluid upon the surface of said product, in combination, discharge nozzles extending substantially perpendicularly to said surface, said nozzles being separated by at least one evacuation channel extending transversely to the principal dimension of said elongated product, at least one baffle member extending inside said channel substantially parallel to and spaced from said surface, thereby dividing said channel into a first compartment close to said surface and into a second compartment more remote from said surface, and closure means obstructing at least in part the ends of said first compartment while leaving substantially unobstructed the ends of said second compartment, said baffle member providing at least one passage establishing a connection between said compartments, said passage extending substantially at right angles to said surface, said baffle member having an outwardly curved portion forming a wall of said passage, said passage being provided with a set of cross plates secured to said curved portion and extending substantially perpendicularly to said surface and parallel to said principal dimension.

12. In a machine for the treatment of an elongated product in a predetermined plane and by the impingement of a treatment fluid thereon; a set of discharge nozzles extending substantially normal to said plane, at least one evacuation channel extending transversely of the principal dimension of said elongated product and arranged to exhaust spent treatment fluid, and a plurality of spaced fluid directional means completely housed in said evacuation channel and including a first portion positioned adjacent said product and arranged to extend substantially parallel to said principal dimension and a second portion connected to said first portion, but offset with respect to the latter and remote from said product, said second portion being positioned to guide spent treatment fluid into a part of said evacuation channel remote from said plane and in a direction substantially normal to said plane.

13. A machine according to claim 12, including guide means within said evacuation channel and arranged to support said elongated product in close relationship to said nozzles in said predetermined plane, said first and second portions being spaced from said guide means.

14. In a machine for the treatment of an elongated web product by the impingement of a treatment fluid upon the surface of said product; in combination, fluid discharge nozzles for fresh treatment fluid extending substantially in perpendicular direction to said surface of said product, a plurality of evacuation channels extending transversely to the length of said product, each two adjacent nozzles being separated by one of said evacuation channels, each evacuation channel being provided with directional baffle means located within said channel, said baffle means including at least one portion extending substantially parallel to the direction of and close to said surface of said product and including at least another portion connected to said one portion and recessed thereto and shaped to extend substantially perpendicular to said surface, to thereby divide said channel into a plurality of transverse sections, whereby initial flow of spent fluid in transverse direction to the length of said product is effectively prevented.

15. The combination according to claim 14, including guide means for said product, at least some of said directional baffle means being conformed to and spaced from the contour of said guide means to thereby facilitate accommodation of the latter.

16. A machine for fluid-treating the surfaces of a lengthy cellulosic product; said machine comprising rows of spaced nozzle means oppositely arranged to each other and having lateral walls, each nozzle means being provided with discharge end means for discharging fresh treatment fluid against said surfaces substantially perpendicularly to the latter, evacuation channels for receiving spent fluid from said product and extending in transverse direction to the length of said product, each evacuation channel being positioned between two adjacent nozzle means of each row, laterally and vertically extending closure plate means placed against said lateral walls of said nozzle means and obstructing in lateral direction a first space determined between the nozzle discharge end means and said product under treatment and extending in regard to the evacuation channels a predetermined height perpendicularly to said surfaces of the product, and deflecting plate means located substantially within a second space defined by the product under treatment and said closure plate means adjacent said evacuation channels, respectively, said deflecting plate means having a surface portion facing said product and for directing fluid discharged through the nozzle end means after having acted on the product, whereby spent fluid will be evacuated from said spaces in a direction substantially perpendicular to said surfaces of said product, said discharge end means of said nozzle means being located closer to said product than said surface portion of said deflecting plate means facing said product.

References Cited in the file of this patent

UNITED STATES PATENTS

408,235	Haskell	Aug. 6, 1889
2,022,593	Fuykers	Nov. 26, 1935
2,060,430	Spooner	Nov. 10, 1936
2,133,330	Offen	Oct. 18, 1938
2,286,731	Hanson	June 16, 1942
2,384,990	French	Sept. 18, 1945
2,422,105	Lahrer	June 10, 1947
2,462,380	Gautreau	Feb. 22, 1949