Dec. 7, 1943. T. W. SHENTON 2,336,425

SWITCH OPERATING MEANS

Original Filed Sept. 10, 1940

FIG. 1.

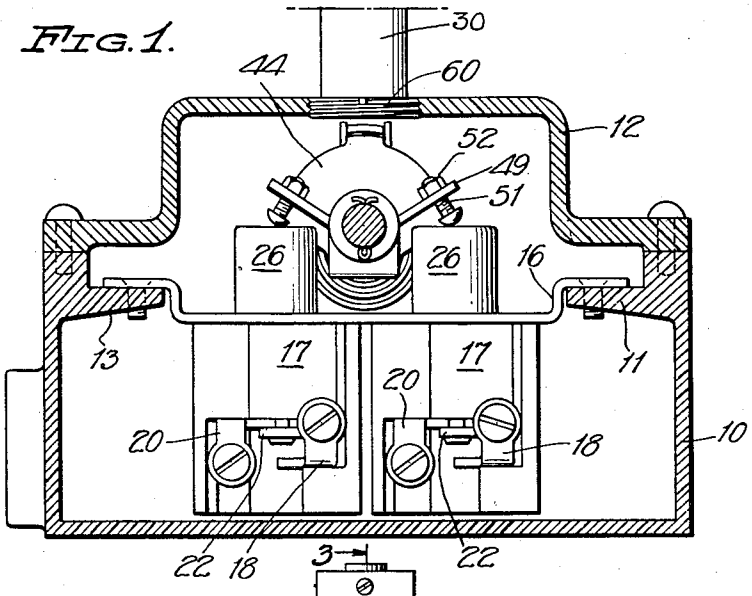

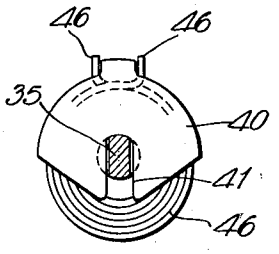

FIG. 4.

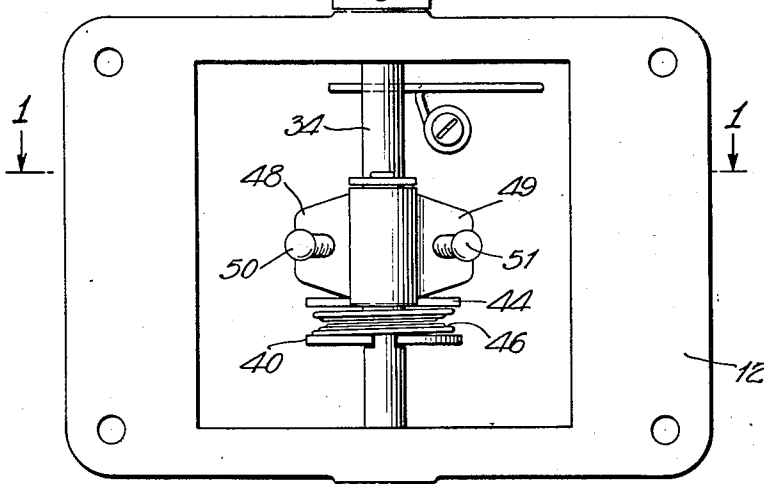

FIG. 2.

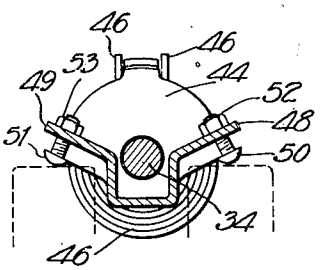

FIG. 5.

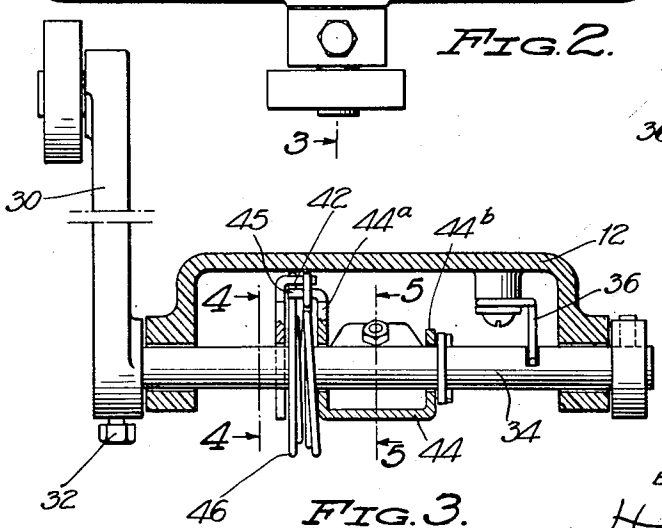

FIG. 3.

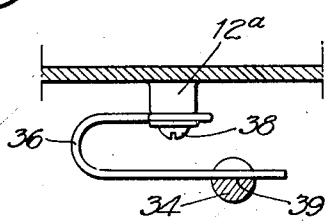

FIG. 6.

INVENTOR
THOMAS W. SHENTON
BY HIS ATTORNEYS
Howson and Howson

Patented Dec. 7, 1943 2,336,425

UNITED STATES PATENT OFFICE

2,336,425

SWITCH OPERATING MEANS

Thomas W. Shenton, West Hartford, Conn., assignor to The Arrow-Hart & Hegeman Electric Company, Hartford, Conn., a corporation of Connecticut

Continuation of application Serial No. 356,236, September 10, 1940. This application February 3, 1941, Serial No. 377,248

7 Claims. (Cl. 74—470)

This invention relates to electric switches. More particularly it relates to electric switches useful in connection with machines or mechanically-moving parts wherein the operating member of the switch is subject to an indeterminate travel by movement of the machine part or piece of work as it strikes the operating arm.

It is an object of my invention to provide an electric switch which is operable in two directions by oscillation of an operating member and in which there is provision for practically unlimited travel of the operating member without harm to the switch parts.

Another object of my invention is to provide a switch of the above type in which it is possible to adjust the relation of the operating parts to the switch mechanism without removing the switch mechanism from its casing or disassembling any of the operating parts of the device.

Another object is to provide a switch which is operable in two directions and which may be used in a variety of situations without compensatory adjustment for varying extremities of travel beyond a predetermined amount required for switch opening and closing. An allied object is to permit adjustment of the invention to vary said predetermined amount, without removal of the switch cover.

Other objects and advantages of my invention will become apparent as it is described in connection with the accompanying drawing.

In the drawing—

Fig. 1 is an elevational section view through a device embodying the principles of my invention, the section being taken along a line such as 1—1 of Fig. 2;

Fig. 2 is a bottom view of the cover and the parts it carries;

Fig. 3 is a section view of the cover and its accompanying parts, with the section being taken along line 3—3 of Fig. 1;

Figs. 4 and 5 are detail views of the lost motion mechanism, looking in the direction of the lines 4—4 and 5—5 of Fig. 3;

Fig. 6 is a detail view showing the relation of the centering spring and switch shaft.

This application is a continuation of my prior application, Serial No. 356,236, filed September 10, 1940.

Referring to the drawing, the invention is mounted in a rectangular housing 10 having a cover 12 with its central portion raised to accommodate operating parts for the two push button switches which are within the base. These two push button switch devices are supported from a metal supporting bridge 16 whose ends are screwed upon shoulders 11 and 13 which extend from opposite side walls of the housing 10. The push button switch devices may be of conventional construction. For the purpose of illustration, I have shown identical switches comprised of blocks or bases of insulating material 17 having pairs of stationary contacts 18 and 20 which are engageable by movable bridging contacts 22. The bridging contacts are carried by and move in response to reciprocations of vertical rods having insulating buttons 26 on their heads.

The mechanism for operating the push buttons comprises an operating lever 30 which is secured by a set screw 32 to an end of the main switch shaft 34 which extends outside of the cover 12. Bearings for the switch shaft 34 are formed in opposite side walls of the switch cover. The operating lever 30 is held normally in upright position by a centering spring 36 of bent steel wire. This spring has one of its ends looped and secured to a boss 12^a on the underside of the cover 12 by a screw bolt 38. The spring is then U-bent so that its other end portion will engage with the flat bottom 39 of a notch cut into the switch shaft 34.

The motion of the switch shaft is transmitted through a lost-motion mechanism to the push buttons 26 by the following structure: A spring-actuating member 40 having the shape of a segment of a disc is mounted upon the shaft 34 to move therewith. For that purpose, a slot 41 is cut in the member to receive a flat-sided portion 35 of the switch shaft 34, as illustrated in Fig. 4. A lug 42 is formed on the upper edge of the spring actuating member 40 and is bent parallel to the axis of the switch shaft 34. Through the intermediary of a strong coiled torsion spring 46, movement of the switch shaft and spring actuating member 42 causes a button operating member 44 to move. The button operating member is stamped from sheet metal and provided with parallel sides 44^a and 44^b normal to the axis of the shaft 34 and apertured to permit passage of that shaft, whereby the button operating member is pivotally mounted upon said shaft. A lug 45 is bent out from the upper end of the side 44^a in position to underlie the lug 42. (See Fig. 3.) The torsion spring (see patent to Perkins #1,564,016 of Dec. 1, 1925) is wound around the switch shaft and has one end engaging one side of each of the lugs 42 and 45 and the other end engaging the other sides of those lugs.

The push button operating member 44 has divergent ears 48 and 49 which extend therefrom

in substantially radial directions with relation to the switch shaft **34**. Each of these ears is provided with a screw-threaded aperture in which are situated adjustment bolts **50** and **51**, on whose ends are lock-nuts **52** and **53**. The heads of these adjustment bolts are positioned to engage the push buttons **26** to cause one or the other of them to be depressed as the switch shaft is rotated.

In order that the adjustment of the bolts **50** and **51** may be accomplished without removing the cover of the device, I have provided in the cover directly over the push button operating member **44** a removable screw plug **60** of sufficient diameter to permit a pair of pliers or other tool to be inserted through the screw plug aperture for the purpose of manipulating the bolts **50** and **51** and their lock-nuts **52** and **53**.

From the foregoing, the operation of the invention may be understood. Normally, the operating lever **30** will be maintained in upright position by the engagement of the centering spring **36** with the switch shaft **34**. When a part of a machine or a piece of work strikes the operating lever **30** and causes it to rotate, the spring tensioning member **45** rotating with the shaft **34** will act through the strong torsion spring **46**, causing the button operating member **44** to move as a unit with the shaft **34**, until one or the other of the push buttons **26** is depressed, depending upon the direction of operation of the shaft. When the push button is fully depressed so that its bridging contact **22** is in engagement with the fixed contact **18**, the operating lever **30** may nevertheless be permitted to be continued in its movement, during which it will simply wind up the torsion spring **46**, without further moving the button operating member. Thus, the push button switch will not be damaged in any way by the continued movement or over-travel of the operating lever **30**. By this construction, almost an unlimited amount of over-travel of the operating lever **30** in either direction is permissible, no matter what the adjustment of the bolts **50** and **51** may be. Therefore, my invention can be used in connection with a large variety of machines and in controlling a large variety of types of work without the danger of any damage to the switching parts and without the necessity of adjustment to take care of the travel of the particular piece of work or parts with which the invention is to be used. It is only necessary that the bolts **50** and **51** be adjusted so as to cause opening or closing or operation of the push button switches at the proper moment with relation to the particular machine or piece of work with which the invention is to be used.

The operating arm will always center itself in its initial, upright, or "at rest" position when released, by reason of the fact that the torsion spring **46** will first tend to align the lugs **42** and **45**, which will inevitably bring the operating arm **30** within a small angle of upright position. Thereafter, the centering spring **36** will complete the centering of the operating arm **30** in upright position.

It may be observed that by using light springs in the push buttons, as will usually be the case, it will be possible by adjusting the bolts **51** and **50** to cause one or the other, or both, of the push button switches to be normally open when the operating arm **30** is in upright position.

Many uses of my invention will suggest themselves and many modifications and changes in form within the scope of my invention will be apparent to those skilled in the art. Therefore, I do not limit the invention to the specific uses which have been mentioned for the purpose of illustration, nor to the specific embodiment herein described.

I claim:

1. Electric switch operating mechanism comprising an oscillatory shaft, a spring tensioning member movable with the shaft, an operating member rotatably mounted on the shaft for operating a plurality of depressible circut controlling means, a torsional spring engaging said tensioning member and said operating member and causing them to rotate together, said spring being constructed and arranged to permit continued travel of said tensioning member resulting in spring tensioning after said circuit controlling means have been depressed and causing reestablishment of the relation of said tensioning member and operating member as said depressible means are released, adjustable means on said operating member, a housing and a cover enclosing said mechanism, and a removable plug in the cover adjacent to said adjustable means whereby adjustment may be made without removing the cover.

2. Electric switch operating mechanism for operating a plurality of electric devices, comprising a rotatable shaft, device-actuating means on said shaft, exterior operating means on said shaft, adjustable means on said device-actuating means for adjusting the relationship of said device-actuating means to said electric devices, and resilient torsional means for transmitting the motion of said exterior operating means to said device-actuating means to cause actuation of one or another of said electric devices and thereafter permitting said exterior operating member to continue its movement independent of said device-actuating means.

3. The combination comprising a housing, a cover therefor, operating means for a plurality of electric devices comprising a shaft rotatively mounted in said cover, device-actuating means on said shaft, exterior operating means on said shaft, adjustable means on said device-actuating means for adjusting the relationship of said device-actuating means to said electric devices, removable means in said cover adjacent said adjustment means whereby the adjustment means can be adjusted without removing the cover, and resilient torsional means for transmitting the motion of said exterior operating means to said device-actuating means to cause actuation of one or another of said electric devices and thereafter permitting said exterior operating member to continue its movement independent of said device-actuating means.

4. The combination comprising a housing, a cover therefor, operating means for a plurality of electric devices, said operating means being mounted in and removable as a unit with said cover, said operating means comprising a shaft rotatively mounted in said cover, device-actuating means on said shaft, exterior operating means on said shaft, resilient torsional means for transmitting the motion of said exterior operating means to said device-actuating means to cause actuation of one or another of said electric devices and thereafter permitting said exterior operating member to continue its movement against the full strength of said torsional means independent of said device-actuating means, and means for returning said shaft automatically to "at rest" position when said exterior operating means is released.

5. Electric switch operating mechanism for operating a plurality of electric devices, comprising a rotatable shaft, device-actuating means on said shaft, exterior operating means on said shaft, resilient torsional means for transmitting the motion of said exterior operating means to said device-actuating means to cause actuation of one or another of said electric devices and thereafter permitting said exterior operating member to continue its movement against the full strength of said torsional means independent of said device-actuating means, and means for returning said shaft automatically to "at rest" position when said exterior operating means is released.

6. Electric switch operating mechanism for operating a plurality of operating members within an enclosure, comprising a shaft journalled in said enclosure, an arm-member mounted on an exterior end of said shaft for oscillating it, an actuating member mounted on said shaft, adjustable means on said actuating member for adjusting the relationship of said actuating member to said operating members, means for affixing to said shaft one of the members that is mounted thereon, leaving the other rotatively mounted, and resilient means coupling said shaft and rotative member so as to cause them to move as a unit during operation of said plurality of operating members and permitting said arm-member to continue its movement against the full strength of said resilient means after said actuating member has stopped.

7. Electric switch operating mechanism for operating a plurality of operating members within an enclosure, comprising a shaft journalled in said enclosure, an arm-member mounted on an exterior end of said shaft for oscillating it, an actuating member mounted on said shaft, adjustable means on said actuating member for adjusting the relationship of said actuating member to said operating members, a removable plug in said enclosure adjacent said adjustment means whereby the adjustment means may be adjusted from outside the enclosure, means for affixing to said shaft one of the members that is mounted thereon, leaving the other rotatively mounted, and resilient means coupling said shaft and rotative member so as to cause them to move as a unit during operation of said plurality of operating members and permitting said arm-member to continue its movement against the full strength of said resilient means after said actuating member has stopped.

THOMAS W. SHENTON.