A. SMITH.

DRAINING CULVERT OR CASING.

APPLICATION FILED MAR. 25, 1912.

1,105,539.

Patented July 28, 1914.

Fig. 1.

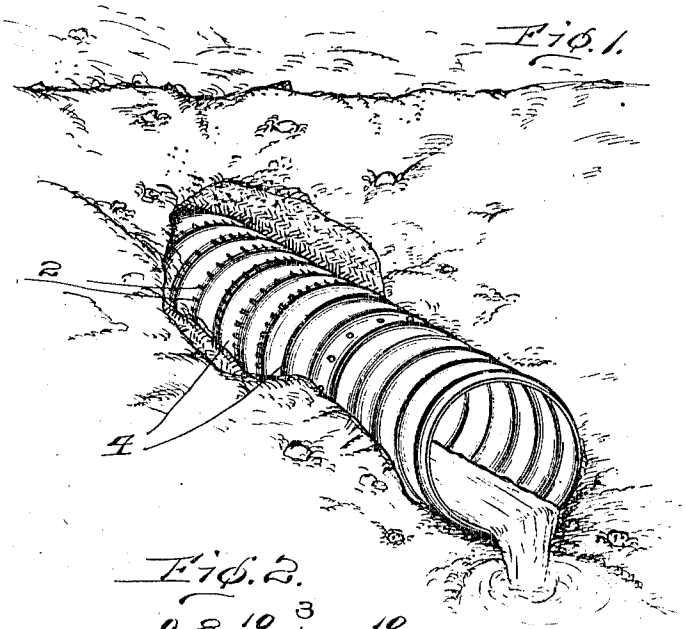


Fig. 2.

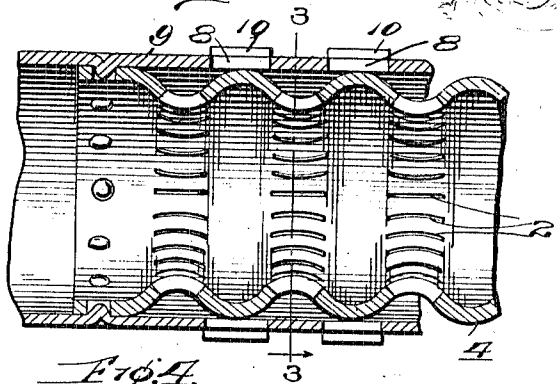


Fig. 3.

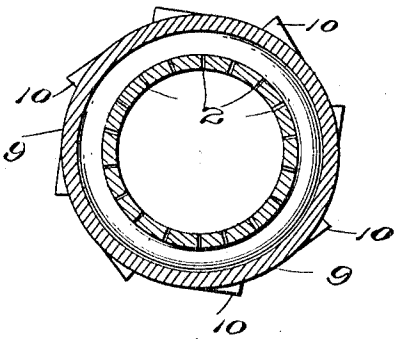


Fig. 4.

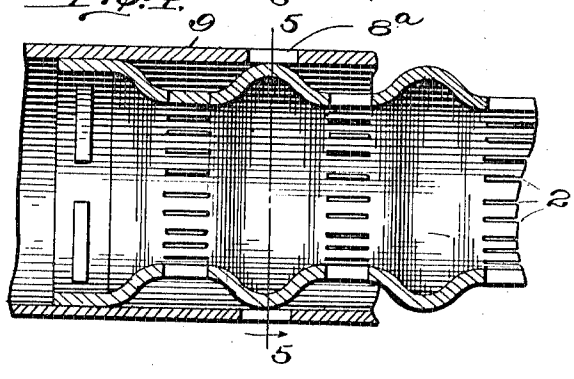


Fig. 5.

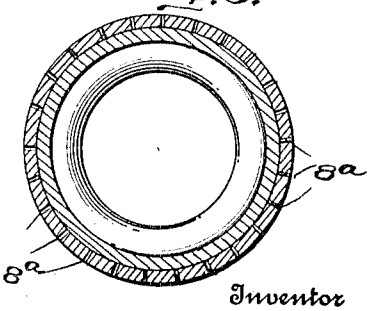


Witnesses

J. M. Fowler Jr.

R. S. Trogner.

Inventor

Andrew Smith

By Eugene L. Brown

Attorney

# UNITED STATES PATENT OFFICE.

ANDREW SMITH, OF SAN MATEO, CALIFORNIA, ASSIGNOR TO SMITH METAL PERFORATING COMPANY, OF SAN MATEO, CALIFORNIA.

## DRAINING CULVERT OR CASING.

1,105,539. Specification of Letters Patent. Patented July 28, 1914.

Original application filed April 13, 1909, Serial No. 489,642. Divided and this application filed March 25, 1912. Serial No. 686,102.

*To all whom it may concern:*

Be it known that I, ANDREW SMITH, a citizen of the United States, residing at San Mateo, in the county of San Mateo and State of California, have invented certain new and useful Improvements in Draining Culverts or Casings, of which the following is a specification.

My invention relates to metallic drainage casing or tiling which may be used for draining the soil, such as drainage culverts, where it is desired to drain the adjacent earth of embankments, or roadways through which the drainage casing is carried.

This application is a division of my prior application filed April 13, 1909, Serial No. 489,642, and patented May 28, 1912, No. 1,028,065.

In order that the earth or soil through which the drainage casing passes may receive the water from the overlying or adjacent earth, and not become clogged, I make the drainage openings in the form of narrow slits which are preferably wider upon the inner side of the casing so that any fine particles of silt and sand which enter the slits will pass through into the interior of the casing. I may construct the drainage casing either of a single member or of telescoping members. For the purpose of increasing the strength and rigidity of the casing and protecting the slitted portions, I provide the casing with circumferential corrugations, thus forming alternate convex and concave portions, and place the drainage openings in the concave portions.

My invention will be more fully disclosed in the following description, in connection with the accompanying drawings, in which—

Figure 1 is a perspective view of a perforated drainage casing embodying my invention and used as a culvert; Fig. 2 is a longitudinal section of my drainage casing in which I employ a double casing; Fig. 3 is a cross-section of Fig. 2; Fig. 4 is a longitudinal section of another form of my drainage casing in which I employ telescoping sections; and Fig. 5 is a cross-section of Fig. 4.

While, as previously stated, I form the casing with circumferential corrugations for the purpose of greatly increasing its strength and rigidity, this construction is peculiarly adapted to the purposes of my drainage casing in which I place the openings or slits 2 in the concave portions. These draining openings are preferably sheared slits formed by shearing the metal, thus forming smooth-walled narrow openings, as more fully set forth in my original application above referred to. The convex portions 4, constitute outstanding abutments which receive the pressures brought to bear upon the casing and also serve to shield and protect the drainage openings lying between the corrugations.

The peculiar advantages of my perforated corrugated casing as a drainage casing will be appreciated by engineers.

While the single casing shown in Fig. 1, will be sufficient for ordinary drainage work, it is frequently desirable to form the drainage tiling of inner and outer telescoping sections, such as illustrated in Figs. 2 to 5, inclusive. It is desirable to employ the duplex casing where the pressures are very great or where the casing is liable to receive sudden strains due to very heavy crushing weights, as where the casing forms a drainage culvert under a shallow embankment carrying railroad trains. I have shown the corrugated casing as the inner member telescoped within a plain or uncorrugated outer casing member, but it will be evident that the plain cylindrical casing may be the inner member and the corrugated casing the outer member, and under certain conditions the latter arrangement is preferable.

In the construction shown in Figs. 2 and 3, the slits or openings 8 in the cylindrical member 9, are formed by shearing the metal and forcing the adjacent metal outward to form projections 10, which serve to protect the slits 8 and keep them from becoming clogged.

In Fig 4, I have shown a slightly different form of corrugated casing, in which the intermediate slotted portion is substantially cylindrical instead of concave, as in Figs. 1 and 2. As is evident, this form of corrugated casing may also be used as a single casing for culverts or other drainage tiling. The plain cylindrical casing shown as an outer member in Fig. 4, is provided with narrow drainage slits, and, as previously stated, these slits $8^a$ should be somewhat narrower than those of the inner casing member, so that the silt and small particles

of sand which pass through the outer casing may readily pass into the inner casing.

In the duplex forms shown in Figs. 2 and 4, the corrugations are shown as bearing against the perforated portions of the outer casing, but it is frequently desirable to have them bear against the intermediate non-perforated portions.

Whether used as a single casing, shown in Fig. 1, or in conjunction with a plan cylindrical casing in the duplex form, shown in Figs. 2 and 4, the convex portions 4, of the corrugated casing serve to greatly strengthen and stiffen the casing and to receive the pressures brought to bear thereon, while the intermediate drainage portions are protected thereby.

In order that the earth of the embankment may not be loosened, or terminal washed from the projecting end of the culvert or drainage casing, the outer end of the casing extending for a few feet into the embankment should be imperforate, as indicated in Fig. 1.

I have described in detail the constructions illustrated in the drawings for the purpose of disclosing embodiments of my invention, but I am aware that changes may be made therein without departing from the spirit of my invention.

I claim:—

1. A sheet metal culvert section provided with circumferential corrugations and with draining apertures, substantially as and for the purpose specified.

2. A culvert section provided with circumferential corrugations presenting externally convex and concave portions, and draining apertures in the said concave portions.

3. A sheet metal culvert section provided with transverse corrugations presenting externally concave and convex portions and apertures located in the concave portions.

4. A sheet metal drainage casing provided with circumferential corrugations and with sheared draining slits.

5. A sheet metal drainage casing provided with transverse corrugations presenting externally concave and convex portions and sheared draining slits located in the concave portions.

6. A sheet metal drainage casing, comprising a member provided with circumferential corrugations and with draining apertures, and a plain cylindrical member provided with draining apertures, said members being telescopically arranged to form a duplex or double-walled conduit.

In testimony whereof I affix my signature in presence of two witnesses.

ANDREW SMITH.

Witnesses:
E. C. BROWN,
CHARLES N. MURRAY.