Jan. 13, 1959 D. GABRIEL 2,868,201

ASPIRATING NEEDLE HUB

Filed March 8, 1954

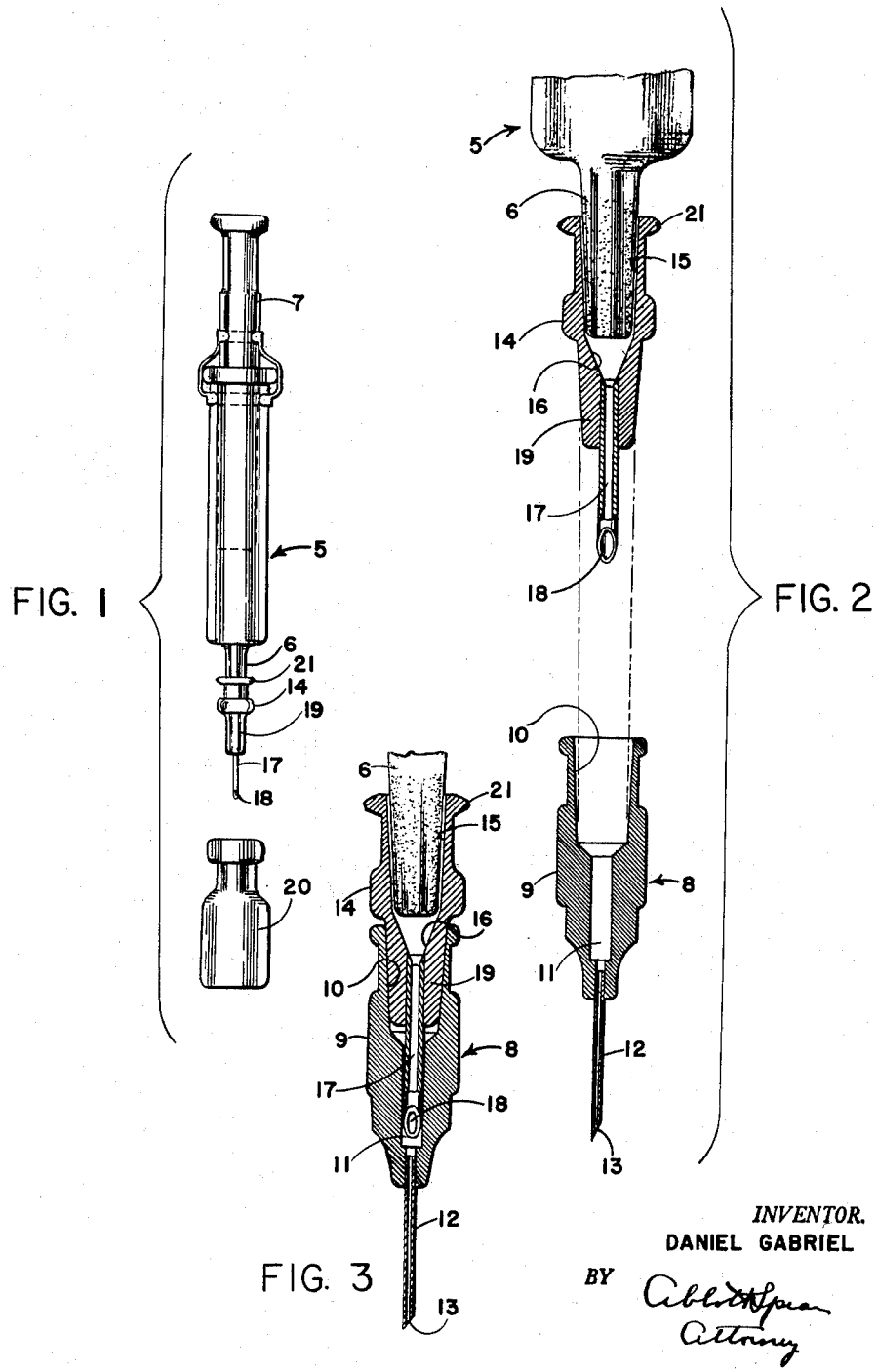

FIG. 1

FIG. 2

FIG. 3

INVENTOR.
DANIEL GABRIEL

BY Albert H. Spencer
Attorney

United States Patent Office 2,868,201 Patented Jan. 13, 1959

2,868,201

ASPIRATING NEEDLE HUB

Daniel Gabriel, Pennington Gap, Va.

Application March 8, 1954, Serial No. 414,639

2 Claims. (Cl. 128—221)

This invention relates to aspirating needles and particularly to the hubs thereof.

The filling of hypodermic needles with viscous medicaments illustrates the problem with which this invention is concerned. In order that such liquids may be readily drawn into the syringe from a vial, a needle whose bore is larger and whose length is usually less than that suited for injection purposes is indicated.

Prior to the teachings of Letters Patent No. 2,626,603, of January 27, 1953, it was the practice to remove the aspirating needle, after filling the syringe, and replace it with a needle suitable for use in injecting the medicament. In that patent, a short cannula is shown as secured in the bore of the syringe tip thus to provide a stub aspirating needle as an integral part of the syringe. Means were also provided to detachably lock the hub of an injection needle to the syringe tip with its hub then accommodating the stub needle. In my co-pending application, Serial No. 344,789, filed March 26, 1953, there is shown an aspirating needle permanently secured to the syringe and having a tapered tip enabling the hub of an injection needle to be frictionally locked thereon. While these concepts are meritorious ones, they require special syringes as in each case the aspirating needle becomes a permanent part thereof.

The present invention has for its objective the provision of means enabling this concept to be utilized with syringes of the type having a tapered tip. In accordance with the invention, this objective is attained by providing an aspirating needle with a hub having a seat in one of its ends that is dimensioned to receive the syringe tip and to be frictionally locked thereon. At its other end, the aspirating needle hub has a tapered tip dimensioned to enter the seat of an injection needle and to frictionally interlock therewith.

The seat and tip of the aspirating needle hub may be of the same taper or they may be of different tapers and thus the hub of the aspirating needle may function as an adapter enabling, for example, a hypodermic needle whose hub seat is of the American Luer type to be used with a syringe whose tip has a Record taper or vice versa.

In the accompanying drawings, there is shown an illustrative embodiment of the invention from which its objectives, novel features and advantages will be readily apparent.

In the drawings:

Fig. 1 is an elevational view illustrating a syringe to which is attached an aspirating needle in accordance with the invention.

Fig. 2 is an exploded view, on an increased scale, showing both the attached aspirating needle and an injection needle, both needles being longitudinally sectioned, and

Fig. 3 is a similarly sectioned view with the injection needle attached to the hub of the aspirating needle.

In the embodiment of the invention shown in the drawings, there is generally indicated at **5** a typical hypodermic syringe barrel provided with a tapered tip **6** and in which the plunger **7** is reciprocable.

A typical injection needle, generally indicated at **8**, consists of a hub **9** having a tapered seat **10** in communication with an axial bore **11** in whose tip end there is secured a cannula **12** beveled as at **13** to provide a tissue piercing point.

An aspirating needle is provided that has a hub **14** provided with a tapered seat **15** dimensioned to receive the syringe tip **6** and to be frictionally locked thereon. The seat **15** tapers as at **16** to merge with the axial bore in which the cannula **17** is secured, said cannula being dimensioned to render it suitable for aspirating purposes and being beveled as at **18** to provide a point. The hub **14** also includes a tapered tip **19** dimensioned to enter the hub seat **10** of the injection needle and to frictionally interlock therewith.

With the aspirating needle locked to the syringe tip **6**, the syringe **5** may be filled by withdrawing liquid from the vial **20** as suggested in Fig. 1 and the injection needle **8** may then be quickly and easily locked to the aspirating needle tip **19** to enable the syringe **5** to be used for injecting the medicament, with which it is now charged, into the patient.

When the hubs are thus assembled, it will be noted from Fig. 3 that the stub cannula **17** is entrant of the bore **11** of the hub **9**.

The taper of the syringe hub **6** and the seat **10** of the injection needle **8** may be the same. For example, both may be of the American Luer type or both may be of the Record type. One, however, may be of one type and the other, the other type, in which case, the hub **14** of the aspirating needle becomes an adapter providing economy and convenience since the requirement of a special syringe is obviated. In addition, the flange **21** of the aspirating needle hub **14** may be dimensioned to adapt it for use with syringes of the lock type.

What I therefore claim and desire to secure by Letters Patent is:

1. A needle assembly for use with a hypodermic syringe of the type which has a tapered tip at its distal end, said assembly comprising a hypodermic needle including a hub having a tapered seat, an axial bore in communication with said seat, and a cannula one end of which is lodged in the distal end of said bore, and an aspirating needle including a hub having a seat for frictional mounting on the syringe tip, a tapered tip dimensioned for entry into the seat of the hypodermic needle hub, an axial bore through the tip of said aspirating needle hub and in communication with the seat thereof, and a stub cannula of greater diameter than said hypodermic cannula, one end of which is lodged in the distal end of said bore of said aspirating needle hub and dimensioned to extend into the bore of said hypodermic needle hub without contact with the cannula thereof when said hypodermic needle hub is frictionally mounted on the tip of said aspirating needle hub, the mating tip and seat of said hubs being dimensioned to position the proximal end of said hypodermic needle hub closely adjacent the distal end of the syringe tip when the needles are assembled and the seat of the aspirating needle is mounted thereon.

2. The assembly of claim 1 in which the seats of the hubs and the tip of the aspirating needle hub are of the same taper.

References Cited in the file of this patent

UNITED STATES PATENTS

2,117,469	Woodyatt	May 17, 1938

FOREIGN PATENTS

177,587	Great Britain	Mar. 23, 1922
739,312	France	Oct. 25, 1932