April 14, 1970 J. A. RAUH ET AL 3,506,163

ARTICLE FOR HOLDING AND DISPENSING FLOWABLE MATERIALS

Filed May 22, 1968 2 Sheets-Sheet 1

FIG. 1

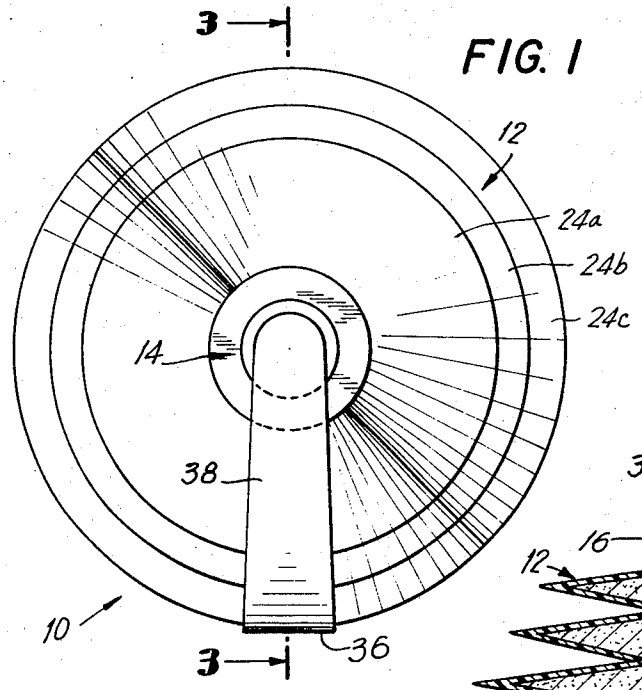

FIG. 3

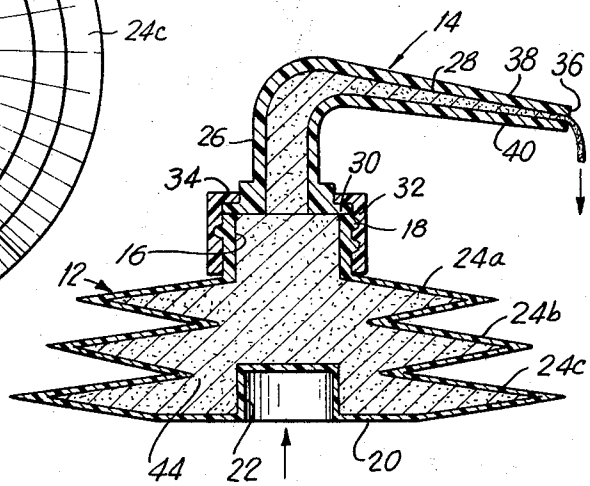

FIG. 2

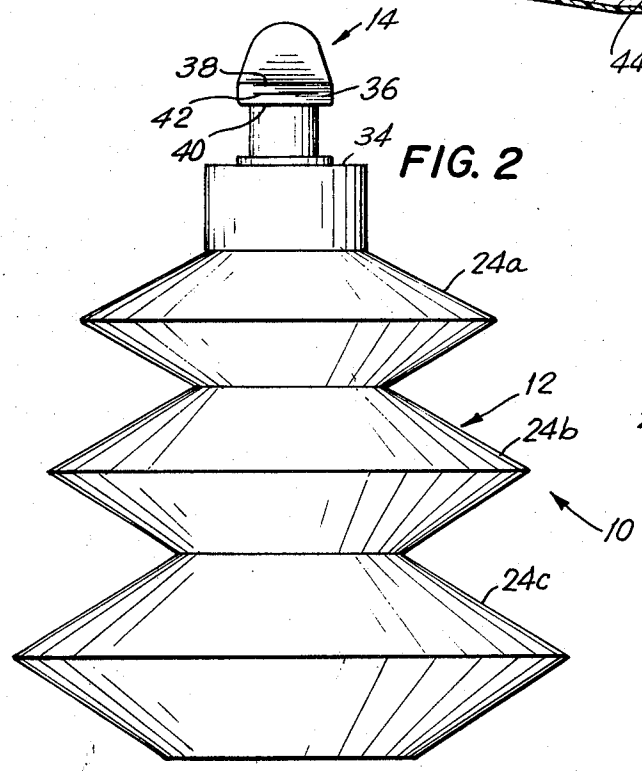

FIG. 4

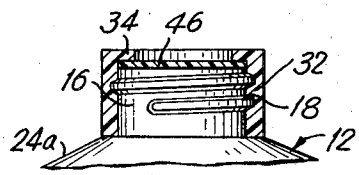

INVENTORS
JAMES A. RAUH
MILTON E. STANSON

BY

Steinberg & Blake
ATTORNEYS

April 14, 1970 J. A. RAUH ET AL 3,506,163

ARTICLE FOR HOLDING AND DISPENSING FLOWABLE MATERIALS

Filed May 22, 1968 2 Sheets-Sheet 2

FIG. 5

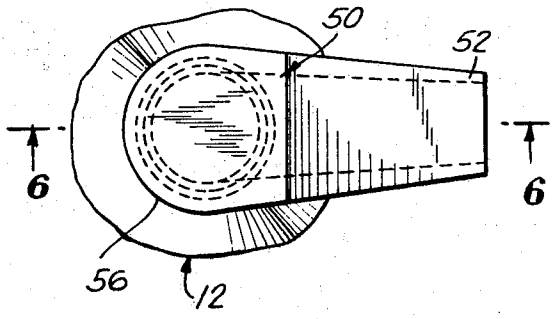

FIG. 6

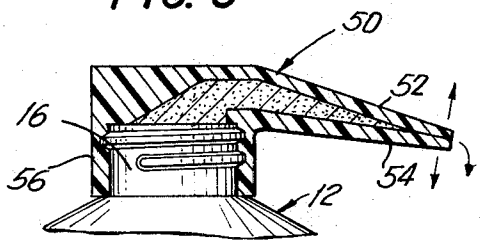

FIG. 7

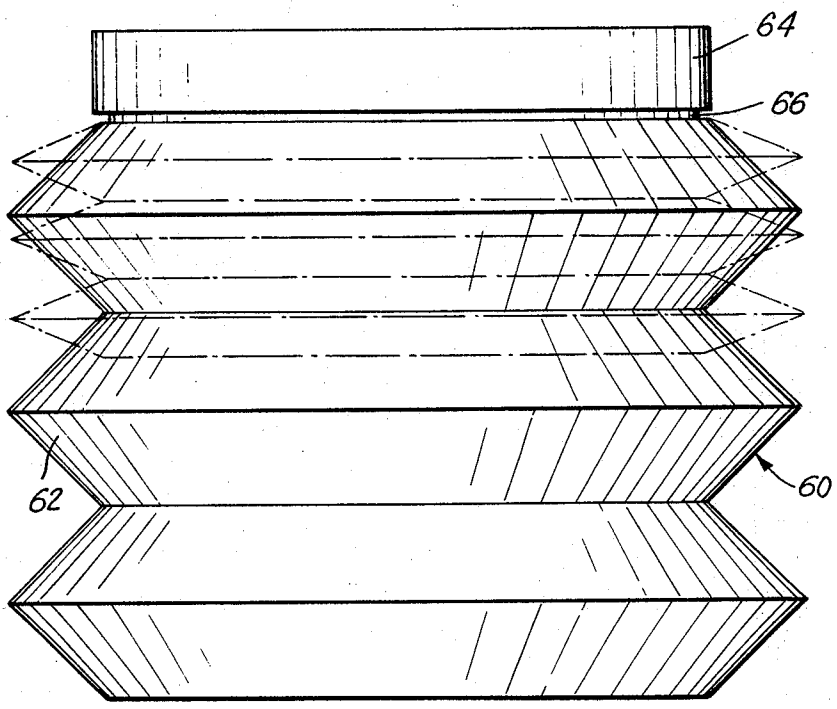

INVENTORS
JAMES A. RAUH
MILTON E. STANSON

BY

Steinberg & Blake
ATTORNEYS

United States Patent Office

3,506,163

Patented Apr. 14, 1970

3,506,163

ARTICLE FOR HOLDING AND DISPENSING FLOWABLE MATERIALS

James A. Rauh, 1007 Central Ave., Union City, N.J., 07087, and Milton E. Stanson, 21 E. 10th St., New York, N.Y. 10003

Filed May 22, 1968, Ser. No. 731,202

Int. Cl. B65d *37/00*

U.S. Cl. 222—212 10 Claims

ABSTRACT OF THE DISCLOSURE

An article for holding and dispensing flowable materials such as liquids or semi-solids. The article has a collapsible container means which can be collapsed from an initial expanded position when it is filled with the flowable material toward a collapsed position where the volume of the container means is only a fraction of its initial volume. A normally closed, spout means which opens automatically in response to a pressure increase is connected to and communicates with the interior of the container means for automatically opening in response to a reduction in the volume of the container means to discharge material of the latter. At the end of any given reduction in the volume of a container means, the spout means automatically assumes its closed position, thus maintaining the flowable material within the container means out of contact with the outer atmosphere and also preventing the container means from expanding back toward its initial position.

BACKGROUND OF THE INVENTION

The present invention relates to articles for holding and dispensing flowable materials. For example, the article of the invention may be used to hold and dispense materials such as syrups of all types, toothpaste, shampoo, peanut butter, catsup, mustard, etc. However, the article is not limited to use with pasty, highly viscous materials of this type and can be used with liquids such as concentrated solutions of edible products.

One of the problems encountered with articles for holding and dispensing materials of the above type is that such products tend to spoil as a result of oxidation resulting from contact between these materials and the outer atmosphere. Even where the materials are not subjected to spoilage, they can assume a dry, crusty condition at their exposed surfaces creating considerable inconvenience and often rendering further dispensing of the materials impossible to carry out. A further problem encountered with known articles of this type is the tendency of the contents thereof to drip and spill. Also, there often is no way of knowing how much of the material remains within the article, so that one can unexpectedly run out of the material.

In the case of colapsible containers, it is impossible with known constructions to achieve a condition where substantially the entire contents of the container have been discharged therefrom, so that a considerable amount of the material is always wasted because it is retained in the container when the latter is discarded. In addition, reuse of such collapsible containers is not possible, and containers which can withstand pressure variations, which will not break if frozen, and which are of lightweight and low cost have not been satisfactorily achieved up to the present time.

SUMMARY OF THE INVENTION

It is accordingly a primary object of the present invention to provide an article of the above general type which will avoid the above drawbacks.

In particular, it is an object of the invention to provide an article of the above general type which is capable of maintaining material such as foodstuffs in the interior of a container out of contact with the atmosphere to protect this material against the effects of the atmosphere.

A further object of the present invention is to provide for an article of the above type a normally closed, self-opening discharge spout which when the article is not used to discharge contents therefrom will automatically close to seal off the material within the article from the outer atmosphere.

Furthermore, it is an object of the invention to provide a structure of the above type which will not expand back to its initial configuration, so that the extent to which the article is collapsed is an indication of the extent to which it is filled.

Furthermore, it is an object of the present invention to provide a collapsible container which has a construction which enables substantially all of the contents in the interior of the container to be discharged therefrom.

Yet another object of the present invention is to provide a construction which is of light weight, which can withstand substantial pressure variations, which will not break, even if frozen, and which can be manufactured at low cost.

Also, the objects of the present invention include a method for manufacturing a discharge spout for an article of the above type.

In accordance with the invention the article includes a collapsible container means capable of collapsing from an initial expanded position toward a collapsed position while undergoing a reduction in volume. A discharge spout means is connected to and in communication with the container means to discharge a flowable material from the interior thereof, and this discharge spout means has a normally closed position and is pressure-responsive in the sense that it responds automatically to a reduction in the volume of the container mean to discharge material therefrom. At the end of any given increment of reduction in the volume of the container means, the spout means automatically reassumes its closed position, due to the inherent resiliency of the spout means, and as a result the material in the container and in the interior of the spout means itself is prevented from communicating with the outer atmosphere so as to be protected therefrom. At the same time, the container cannot expand back to its initial position, so that it remains in a partly collapsed position indicating the extent to which the container is filled.

BRIEF DESCRIPTION OF DRAWINGS

The invention is illustrated by way of example in the accompanying drawings which form part of this application and in which:

FIG. 1 is a top plan view of an article according to the present invention;

FIG. 2 is a front elevation of the article as seen when looking toward the discharge tip of a spout thereof;

FIG. 3 is a sectional elevation taken along line 3—3 of FIG. 1 in the direction of the arrows and showing the article in a partly collapsed condition;

FIG. 4 is a fragmentary partly sectional elevation of the manner in which the container is closed before a spout is joined thereto;

FIG. 5 is a fragmentary top plan view of another embodiment of a spout of the invention;

FIG. 6 is a longitudinal sectional elevation taken along line 6—6 of FIG. 5 in the direction of the arrows; and

FIG. 7 is an elevation of another embodiment of a container according to the invention, FIG. 7 showing the container in a partly collapsed condition in dot-dash lines.

DESCRIPTION OF THE PREFERRED EMBODIMENTS

Referring now to drawings and to FIGS. 1–4 in particular, it will be seen that the structure of the invention illustrated in FIGS. 1–4 is in the form of an article **10** made up of two primary units, namely, a container means **12** and a spout means **14**. The container means **12** is collapsible and is made of any desired plastic material such as polyvinyl chloride, polyethylene, or the like. This material of which the container means **12** is formed is flexible and may also be resilient. The container means **12** is formed with an open top end **16** in the form of a cylindrical neck having exterior threads **18** molded integrally therewith. Opposite to its open top end the container means **12** has a closed bottom end **20** provided with a protuberance **22** which also may be molded integrally with the sheet material from which the collapsible container means **12** is molded. This protuberance **22** may be hollow, as indicated in FIG. 3. The neck **16** and the protuberance **22** have a common axis which coincides with the central axis of the container means **12**.

Surrounding this central axis of the container means **12** are a plurality of annular bellows portions **24***a*, **24***b*, and **24***c*. These annular bellows portions **24***a*–**24***c* are of V-shaped cross section and they are integrally joined with each other in the manner shown in FIG. 3, while the end annular bellows portions **24***a* and **24***c* are integrally joined with the neck **16** and the closed end **20**, as is also indicated in FIG. 3. Although only three bellows portions are indicated in the illustrated example, any desired number of these bellows portions may be provided for the container means **12** of the invention.

It will be noted that with the structure illustrated in FIGS. 1–3, the successive bellows portions **24***a*–**24***c* are of progressively increasing diameters from the upper open end **16** toward the lower closed end **20** of the container means **12**.

The spout means **14** is also made of a moldable plastic material such as polyvinyl chloride, polyethylene, polypropylene, or the like, and the composition of the plastic used for the spout means **14** is such that it has elastomeric properties. As is apparent particularly from FIG. 3, the spout means **14** is of substantially L-shaped configuration having one leg **26** which communicates with the interior of the container means **12** at its open end **16** and a second leg **28** which is substantially perpendicular to the leg **26**. At its open end **26**, the spout means **14** has an outwardly directed flange **30** formed integrally with the tubular leg **26** and engaging the exterior top end surface of the neck **16**.

A cap nut **32** of the spout means **14** has at its top end an inwardly directed flange **34** engaging the flange **30**, and the nut **32** is formed with internal threads which receive the threads **18**, so that through the nut **32** it is possible to fix the spout means **14** to the collapsible container means **12** in a fluid-tight manner as indicated in FIG. 3. The nut **32** may be made of the same plastic material as the container **12**.

Distant from its permanently open end which communicated with the neck **16**, the spout means **14** has a normally closed discharge end **36**. This discharge end **36** is defined between a pair of flat elastic wall portions **38** and **40** which are joined together at their outer side edges and which resiliently press against each other in the normal closed position of the spout means **14**. The leg **28**, however has the walls **38** and **40** thereof gradually displaced apart from each other to an increasing extent from the normally closed discharge end **36** toward the junction with the leg **26** which is of a tubular cylindrical configuration, as is apparent from FIGS. 1–3. Thus, it will be seen that the spout means **14** has an axial tubular leg portion **26** coinciding with the central axis of the container means **12** and a radial tubular leg portion **28** extending radially from and forming an extension of the axial portion **26**, this radial portion having a length sufficiently great to locate the discharge end **36** at the region of the outer periphery of the container means **12** at an elevation higher than the latter. The flat resilient top and bottom walls **38** and **40** which gradually approach each other and the side walls which interconnect these top and bottom walls provide for the radial tubular portion **28** a substantially rectangular cross section the height of which gradually diminishes toward the discharge end **36** from which a ribbon of the flowable material will discharge.

According to a method of the invention the spout means **14** may be manufactured in four steps. In the first step the spout is cast in a blow-molding machine, but initially it is longer than the finished spout and the discharge end is closed for the purpose of permitting the molding operations to be carried out. Moreover, at this time this discharge end is only partially flattened. The molded casting is heated in a second step of the method of manufacture of the spout only to an extent sufficient to shape the material of the casting, not enough to cause the material to stick to itself. Then in a third step of the method, that area which is to form the discharge end **36** is pinched with cooling jaws and held between the latter until the plastic is cool enough to retain the new flattened shape in which it sets as a result of the cooling produced by the jaws and as a result of the flattened condition of the walls **38** and **40** at the discharge end **36** resulting from the action of the cooling jaws. This cooling step takes place in a matter of seconds with the aid of a blast of air or water. In the final step of the method, after the properly shaped spout has been removed from the cooling jaws, the closed or blind end thereof is cut off so as to leave the spout with the flattened walls **38** and **40** at the discharge end **36**, these walls defining between themselves a slit or interface **42** (FIG. 2) where the walls engage and press against each other due to their elastic properties.

The container means **12** may initially be filled with any flowable material **44** schematically indicated in FIG. 3. when the container means **12** is initially purchased, the spout means **14**, except for the cap nut **32**, may be separate from the remainder of the assembly, and the structure can at this time have the condition shown in FIG. 4. Thus, as may be seen from FIG. 4 the container means **12** is closed by way of a separate closure disc **46** which is pressed against the top surface of the neck **16** by the inwardly directed flange **34** of the cap nut **32**. In this way the containers can be conveniently packed and shipped with the spouts initially separate from the cap nuts **32**. Also it is possible with such an arrangement to repeatedly use one spout means with a series of containers as the latter are purchased.

Initially the container means **12** will have a maximum volume somewhat as indicated in FIG. 2, and the flowable material **44** will fill the container all the way up to the sealing disc **46** shown in FIG. 4. When the article is purchased the operator will remove the cap **32** and simply discard the disc **46**. The cap **32** is then assembled with the remainder of the spout means **14** simply by extending the legs **28** and **26** through the space surrounded by the flange **34** until the flange **30** engages the flange **34**, and now the parts can be assembled to have at the neck **16** the condition shown in FIG. 3.

Now the operator will compress the container means **12** so as to reduce the volume thereof from the initial volume, such as that indicated in FIG. 2, toward a minimum volume which the container means **12** has when fully collapsed. As the volume of the container means **12** diminishes the material **44** therein will flow out to the spout means **14**, displacing air out of the latter in advance of the material **44**. The spout means **14** is pressure-responsive in the sense that during a reduction in the volume of the container means **12** the walls **38** and **40** automatically

move apart from each other in response to the increased pressure of the flowable material to open the discharge end **36** while the material **44** discharges in the form of a ribbon, where a semi-solid material is used, through the slit **42** which is now open.

As soon as the operator terminates the reduction in the volume of the container means **12**, the resilient walls **38** and **40** resume their closed position closing the discharge end **36**, as a result of the inherent resiliency of the material of the spout means **14** and because the material **44** is either liquid or semi-solid and thus readily yields to the elastic pressure of the walls **38** and **40**. Because the sheet material which forms the container means **12** is resilient, this container means tends to expand when the operator terminates the reduction in the volume of the container means **12**. This tendency of the container means **12** to expand creates a suction at the spout **14** causing its walls to collapse inwardly toward each other so as to provide a very tight closure in the gradually tapering discharge end of the spout, in a manner preventing any exposure of the material which would cause the latter to drip, to become encrusted, or to be deleteriously affected in any way. Thus, the interior of the container means **12** and the spout **14** is fluid-tightly closed off from the outer atmosphere, and the container means **12** cannot expand back toward its initial volume because any tendency toward such expansion results in a suction causing the outer atmosphere only to press the walls **38** and **40** more tightly against each other. In this way the container means **12** remains in its partially collapsed condition, after some of the material has been removed therefrom, so that a simple glance at the container means of the invention will indicate the extent to which the latter is filled with the material **44**.

Furthermore, the material **44** is reliably protected against the effects of the outer atmosphere, so that it remains fresh and flavorful and is not subjected to spoilage. These are very important considerations for foodstuffs, for example. Even when dealing with non-edible products, as, for example, toothpaste, the article **10** of the invention will prevent any dry encrustations from forming on an exposed surface of the material, so that it is always in a fluid condition ready to be used whenever the container means **12** is compressed.

Not only is the article **10** of the invention suitable for use with pasty, semi-solid materials, in addition it can be used with all types of liquids, and this is of particular importance in the case of concentrated solutions of edible products. For example soups or juices can be provided in concetrated solutions in the article of the invention and the flavor, freshness, and aroma of such concentrated edible solutions will be reliably retained until substantially all of the contents are discharged because of the fact that the contents are reliably maintained out of contact with the outer atmosphere. For example, in the case of coffee, it is possible to situate in the article **10** of the invention a concentrated coffee solution which will reliably maintain its full aroma and flavor because it is not exposed to the outer atmosphere, so that simply by providing a small reduction in the volume of the container means **12**, a given small amount of such concentrated coffee solution can be deposited in a cup, for example, to have boiling water added thereto in order to achieve in this way an instant coffee from a liquid concentrate without risking any loss in the quality of the coffee as a result of the deterioration in the qualities of the concentrate.

It is furthermore to be noted that the article of the invention can be frozen, for example, without risking any breakage, because of the flexibility and resiliency of the materials used. In addition, it is clear that the article of the invention can be very inexpensively manufactured.

It is to be noted that as the volume of the container means **12** diminishes, the neck **16** approaches the protuberance **22** and the annular bellows portions **24***a*–**24***c* become located closer to each other at their outer crests. Because of the progressively increasing diameters of these outer crests, it is possible for the bellows portion **24***a* to nest within the bellows portion **24***b* and for the bellows portion **24***b* to nest within the bellows portion **24***c*, so that the extent to which the material **44** can be displaced out of the interior of the container means **12** is greater than would be the case if the bellows portions were all of the same diameter. In addition, since the configuration of the protuberance **22** closely matches that of the inner surface of the neck **16**, as the latter approaches the closed end **20** it will be axially displaced along the protuberance **22** which thus serves to displace the material **44** out of the neck **16** itself and into the spout means **14**. Thus, in this way also the extent to which the material **44** is displaced out of the article **10** is increased.

When the container means **12** assumes its fully collapsed condition, the entire article **10** can simply be discarded and a new one used in the manner described above, or it is possible to remove the spout means **14** and attach it to a new container means **12** which may be purchased in the condition indicated in FIG. 4 described above. However, it is also possible after removing the spout means **14** again to fill the container means **12** since it can be used repeatedly, so that the user of the article can repeatedly refill the container means **12** and make repeated use of the structure of the invention.

Referring now to FIGS. 5 and 6, the embodiment of the invention which is illustrated therein is provided with a container means **12** identical with that of FIGS. 1–4. However, in this case the spout means **50** is of a different construction in that it does not require a cap nut **32**. This spout means **50** may be manufactured in the manner described above in connection with the spout means **14** and operates in precisely the same way. It has walls **52** and **54** corresponding to the walls **38** and **40**, respectively, and functioning in exactly the same way to achieve the results set forth above in connection with FIGS. 1–3.

However, in the case of FIGS. 5 and 6, the permanently open leg **56** which corresponds to the leg **26** is formed with internal threads so as to be directly received on the neck **16** of the container means **12**, in the manner shown most clearly in FIG. 6, so that in this way the use of a separate cap nut is not required and of course when the container means **12** is initially filled in a factory, for example, a simple closure can be provided over the neck **16** and it is not necessary to use a sealing disc **46** and cap nut **32** as shown in FIG. 4. On the other hand, the spout means **50** may be used interchangeably with a spout means **14** on the same container means **12**, and this interchangeable use may be of interest in some cases. The spout means **50** is advantageous, in certain respects, with respect to the spout means **14** in that the spout means **50** is composed of fewer parts, it has a smaller overall height, and the flat top surface thereof permits stacking. However, the spout means **14** is itself of an exceedingly simple and effective construction so that it can be used wherever features such as stacking, small overall height, and number of parts are not of particularly great importance. The cost of the spout means **14** will generally be less than the cost of the spout means **50**.

In the embodiment of the invention which is illustrated in FIG. 7, a container means **60** which corresponds to the container means **12** is provided, and in this case the several bellows portions **62** thereof are of the same diameter so that a substantially cylindrical container means **60** is achieved. Such a construction may be preferred for use as a collapsible refrigerator jar, for example, capable of being collapsed beyond the partly collapsed condition indicated in dot-dash lines in FIG. 7. This jar is simply closed by a removable cap **64** which is threaded onto the cylindrical neck **66** which in this case is of a relatively large diameter so that a wide-mouthed jar structure is provided, as may be more suitable for certain home uses. With this construction it is only necessary to replace the cap **64** with a spout such as the spout means **50** of FIGS.

5 and 6 where this spout means is provided with an open internally threaded end of the same diameter as the neck **66** to receive the latter. Thus, it is clear that the article of the invention can be adapted to a wide range of different uses, as is apparent from a comparison of the spout means **50** with the spout means **14** and a comparison of the container means **60** with the container means **12**.

What is claimed is:

1. An article for holding and dispensing flowable materials, comprising collapsible container means in the form of a flexible resilient bellows for collapsing from an initial expanded position when filled with flowable material toward a collapsed position where said container means has only a fraction of its volume when filled, and normally closed flexible, pressure-responsive spout means, communicating with the interior of said collapsible container means for directing flowable material out of the latter during a reduction in the volume of said container means when said spout means responds automatically to increased pressure of the flowable material during said reduction in volume of said container means for discharging material therefrom, and said spout means automatically responding to a termination in the reduction in the volume of said container means for automatically assuming its normally closed position maintaining the interior of said container means and material within said spout means out of communication with the outer atmosphere, so that said container means cannot expand back to its initial volume and so that the flowable material is protected from the outer atmosphere, said spout means having an inner axial tubular portion communicating with the interior of said container means and an outer tubular portion forming an extension of said axial tubular portion and being made of a flexible, resilient elastomeric sheet material and having a pair of opposed substantially flat wall portions respectively gradually approaching each other in a direction from said axial tubular portion toward an outer extremity which forms a discharge end for said spout means, said substantially flat wall portions normally resiliently pressing against each other at said discharge end of said spout means to maintain the latter normally closed and said outer tubular portion of said spout means having opposed side walls interconnecting said substantially flat wall portions and coacting therewith to provide said outer tubular portion of said spout means with a substantially rectangular cross section which gradually diminishes in area from said axial tubular portion toward said discharge end of said outer tubular portion to provide at said discharge end a ribbon-shaped configuration for the stream of flowable material which moves out through said discharge end, the tendency of said container means to expand creating in the spout means at its outer tubular portion a suction tending to collapse said side walls of said outer tubular portion of said spout means inwardly toward each other for tightly closing said spout means.

2. The combination of claim **1** and wherein said container means has a pair of opposed ends one of which is open and one of which is closed, said ends being situated along said common central axis of said container means and said container means having annular bellows portions of V-shaped cross section connected to each other and distributed along and surrounding said common axis of said opposed ends of said container means, said spout means being connected to said container means at said open end thereof.

3. The combination of claim **2** and wherein said annular bellows portions of said container means are of approximately the same diameter.

4. The combination of claim **2** and wherein said annular bellows portions of said container means are of progressively different diameters between said ends of said container means.

5. The combination of claim **4** and wherein the diameters of said annular bellows portions are of progressively increasing diameters from one to the other of said ends of said container means.

6. The combination of claim **5** and wherein said annular bellows portions of said container means are of progressively increasing diameters from said open to said closed end of said container means.

7. The combination of claim **1** and wherein said neck portion and protuberance which enters into the latter are both of cylindrical configuration.

8. The combination of claim **1** and wherein said spout means has distant from its discharge end an open connecting end where said spout means is connected with said container means.

9. The combination of claim **8** and wherein said spout means is formed at said open connecting end region thereof with internal threads, said container means having an open neck formed with external threads received by said internal threads for mounting said spout means on said container means.

10. The combination of claim **8** and wherein said spout means has at its connecting end an outwardly directed flange, and an internally threaded cap nut having at one end an inwardly directed flange engaging said outwardly directed flange, said container means having a threaded neck onto which said cap nut is threaded for fluid-tightly connecting said spout means to said container means.

References Cited

UNITED STATES PATENTS

2,750,084	6/1956	Moran	222—490
2,780,378	2/1957	Romano	222—215 X
2,900,665	8/1959	Walker	264—296 X
2,922,178	1/1960	Kelly	222—490 X
3,083,877	4/1963	Gash	222—212 X
3,375,551	4/1968	Sherlock	264—296 X
3,390,821	8/1968	Mullan	222—212

ROBERT B. REEVES, Primary Examiner

N. L. STACK, JR., Assistant Examiner

U.S. Cl. X.R.

222—494; 264—296