Feb. 18, 1930. F. JANEČEK 1,747,546

MACHINE GUN

Filed April 7, 1928

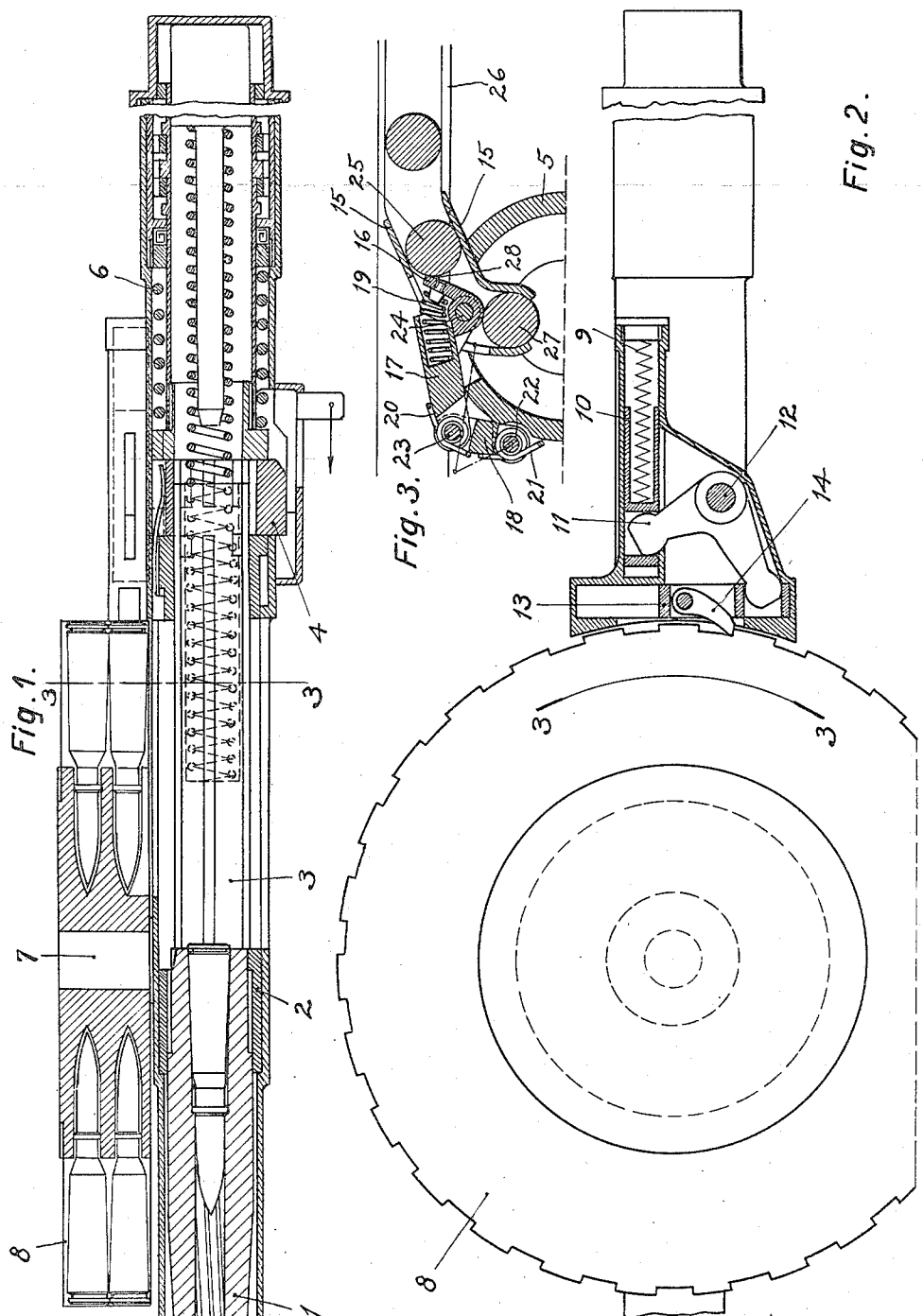

František Janeček INVENTOR.

per A. D. Tompkalnik ATTORNEY.

Patented Feb. 18, 1930 1,747,546

UNITED STATES PATENT OFFICE

FRANTIŠEK JANEČEK, OF PRAGUE, CZECHOSLOVAKIA

MACHINE GUN

Application filed April 7, 1928, Serial No. 268,282, and in Great Britain January 25, 1928.

This invention relates to machine guns of the type having a recoiling barrel and a drum magazine.

According to the present invention, machine guns of the type stated are provided with a loading mechanism in which the magazine is operated by spring means strained by the barrel on recoil. Preferably the strain of the spring means is transmitted to the magazine by a bent lever and sliding element. The cartridges may be fed out of the magazine into a support above a breech block by a spring and lever device which is so arranged that the cartridge to be fed is pressed thereby into the support and simultaneously the device is compressed or strained for the next feed movement by the next cartridge. The spring and lever device may comprise an arrangement of two or more pivotally connected levers, which is turnably secured at one end to the machine gun housing, whilst the other end is freely movable in a vertical plane in the direction of feed.

The invention will now be described by way of example with reference to the accompanying drawings, in which:—

Fig. 1 is a sectional plan of the machine gun through its longitudinal axis;

Fig. 2 is a longitudinal elevation of the gun, with the feed mechanism thereof in section;

Fig. 3 is a development of the section on the line 3—3 (Figs. 1 and 2) of the magazine and cartridge loading means.

Referring to the drawings:—

As shown in Fig. 1, the barrel 1 is connected co-axially with the casing 2 which forms an extension of the rear portion of the barrel 1 and at the same time constitutes a guide for the breech block 3 and the bearing of the breech block lock 4 which latter, when a shot is fired, connects the parts 2 and 3 and also connects therewith as a consequence the barrel 1. These parts constitute the whole recoiling mass which moves backwards on firing.

The automatic supply of cartridges is effected by a drum-magazine 8 rotating on a spindle 7 (see Fig. 1). The cartridges are arranged in several rows, one above another. When the recoil takes place, the casing 2 compresses the spring 9 of the magazine by means of a shoe 10, the extent of movement being such that the casing 2 returns more quickly than the shoe 10. Into a recess in the shoe 10, there engages one arm of an angular lever 11 which is rotatable round a spindle 12. The second arm of the lever 11 operates the cross-piece 13 whose pawl 14 engages behind the teeth of the magazine 8. The pawl 14 is maintained in engagement with the said teeth by means of a spring (not shown in the drawing).

On firing, the casing 2 moves backward for the length of the recoil, taking the shoe 10 with it, whereby the spring 9 is compressed and the lever 11 rotated, displacing the cross-shoe 13 to an extent corresponding to one tooth of the magazine so that the pawl 14 engages with the following tooth of the said magazine. When the recoil is completed, the barrel is moved forwards by a spring 6 (Fig. 1) and the spring 9 is also immediately released and turns the magazine 8 to the extent of one division by means of the said pawl mechanism whereafter the magazine is stopped by means of a securing pawl (not shown in the drawing).

The strength of the spring 9 is only sufficient to turn the magazine to the extent of one division between the end of one and the beginning of the next recoil of the barrel 1. The duration of this is appreciably greater than the duration of the forward movement or the recoil of the gun, since it occupies nearly the whole interval between two successive discharges. As the speed of the movement of the magazine can be low, the force required for the acceleration of the magazine and stock of cartridges is very small even when the rate of firing is very high. In the recoil, the only parts which move with great speed are the shoe 10, the lever 11 and the shoe 13 with its pawl 14. These are light component parts, the acceleration of which calls for no considerable accelerating forces which could set up a vibration of the gun.

For the transference of cartridges out of the magazine into the loading chamber, a

mechanism is used, the construction and operation of which can be seen from the diagrammatic view, Figure 3.

A guide 15 made in two parts is firmly connected with the outer casing 5 and is located above the breech block 3 so as to constitute an intermediate chamber for the cartridges as they are transferred to the breech block from the magazine. Into this intermediate chamber the cartridges are pressed by means of levers 16, 17 and 18, and the springs 19, 20 and 21. The lever 18 turns on a spindle 24 firmly connected with the casing of the weapon 14 and carries the spindle 36 for lever 17. Lever 16 turns on the spindle carried on lever 17.

The cartridges stored in the magazine are carried round on its circumference so that the cartridge 25 first enters the sloping guide 15. It then turns the lever 16 on its axis 24 and thereby stresses the spring 19. The positions of the levers 17 and 18 is not thereby altered. When the cartridge is pushed further forward by the magazine, the lever 18 turns away from the casing 5 and thereby stresses the spring 21. The lever 16 slides on cartridge 27 which is lying ready in the intermediate cartridge chamber 15 and is constantly pressed into this chamber by the spring 20 till the breech block shoves it out of this chamber into the loading chamber. In this way, the space below cartridge 25 is left vacant, and the said cartridge can be pushed further forward by the magazine. In the course of this movement, the cartridge is constantly moving down the sloping guide and the lever system turns as a whole round the axis 22 whereby the axis 24 is lifted. The arm of the couple set up by the spring 19 is increased to the corresponding point 28 of the cartridge, so that the position of equilibrium is passed and the lever 16 begins to open and rolls off the cartridge 25. As soon as the said point 28 falls a certain distance under the line connecting the axes 23 and 24, the spring 21 presses the lever system into the opened position. The springs 19 and 21 have thereby between them set in action the spring 20 which presses the cartridge into the intermediate chamber 15 and presses it down on to the breech block 3. In this position the cartridge is ready to be pressed completely into the intermediate chamber 15 as soon as the backward movement of the breech block 3 on its recoil has brought the edge thereof behind the after end of the cartridge. Meanwhile the breech block 3 has begun to move forward under the influence of its spring 6 and in its forward movement pushes the cartridge out of the chamber 15 into the loading chamber of the barrel.

It will be understood that the constructions described are only given by way of example, and that the individual details can be carried out in different ways without altering the essential nature of the invention.

I claim:—

1. A machine gun comprising a barrel, means for supporting said barrel and permitting recoil thereof, means for resisting said recoil and returning said barrel forwardly, a cartridge magazine, a unidirectional feed device for said magazine, light oscillator means adapted to be moved in one direction by said barrel on recoil, and spring means whereby said oscillator means is moved in an opposite direction so as to effect intermittent feed movement of said magazine.

2. A machine gun comprising a barrel, means for supporting said barrel and permitting recoil thereof, means for resisting said recoil and returning said barrel forwardly, a cartridge magazine drum, ratchet teeth on said drum, a pawl adapted to engage with said teeth, light oscillator means adapted to be retracted by said barrel on recoil so as to effect backward movement of said pawl, and spring means whereby said oscillator means is moved so as to effect forward movement of said pawl and corresponding feed movement of said magazine.

3. A machine gun comprising a barrel, means for supporting said barrel and permitting recoil thereof, means for resisting said recoil and returning said barrel forwardly, a cartridge magazine drum, ratchet teeth on said drum, a pawl adapted to engage with said teeth, a light slidable element adapted to oscillate tangentially of said drum, a pivotal support for said pawl on said drum, a second light slidable element adapted to be retracted by said barrel on recoil, a bent-arm lever, a pivotal support for said lever, shoe means on said slidable elements each adapted to be engaged by an arm of said lever, and spring means acting forwardly on said second slidable element so as to effect intermittent feed movement of said drum by said pawl.

4. A machine gun comprising a barrel, a support for said barrel adapted to permit recoil thereof, means for resisting said recoil and returning said barrel forwardly, a cartridge magazine, a unidirectional feed device for said magazine, light oscillator means adapted to be moved in one direction by said barrel on recoil, spring means whereby said oscillator means is moved in an opposite direction so as to effect intermittent feed movement of said magazine, a breech block, a cartridge guide support communicating with said magazine, means whereby said guide support is located in said barrel support above said breech block, a pivotal lever device turnably secured at one end to said barrel, and springs adapted to act on said device to press cartridges from said magazine into said cartridge support and to be strained for

each succeeding feed movement by the succeeding cartridge.

5. A machine gun comprising a barrel, a support for said barrel adapted to permit recoil thereof, means for resisting said recoil and returning said barrel forwardly, a cartridge magazine, a unidirectional feed device for said magazine, light oscillator means adapted to be moved in one direction by said barrel on recoil, spring means whereby said oscillator means is moved in an opposite direction so as to effect intermittent feed movement of said magazine, a breech block, an inclined cartridge guide support communicating with said magazine, means whereby the outlet end of said guide support is located above said breech block, a pivot on said barrel support, a lever on said pivot, a second lever turnably connected to said first lever and projecting into said inclined guide support, coil springs adapted to press said levers towards said guide support, and a pivoted spring-pressed tongue on the inwardly projecting end of said second lever adapted to regulate passage of cartridges one by one from said magazine through said cartridge support.

In testimony whereof I affix my signature.

FRANTIŠEK JANEČEK.