United States Patent [19]

Gerlach

[11] **3,865,506**

[45] **Feb. 11, 1975**

[54] **CENTRIFUGAL COMPRESSOR**

[75] Inventor: **C. Richard Gerlach,** San Antonio, Tex.

[73] Assignee: **Micro-Gen Equipment Corporation,** San Antonio, Tex.

[22] Filed: **July 9, 1973**

[21] Appl. No.: **377,567**

[52] **U.S. Cl.** ..... **415/213 R,** 416/185

[51] **Int. Cl.** **F04d 7/02**

[58] **Field of Search**.... 415/204, 206, 213 R, 219 C; 416/183, 184, 185, 186

[56] **References Cited**

UNITED STATES PATENTS

45,398	12/1864	Durall	415/213 R
350,362	10/1886	Hawley	415/213 R
2,046,226	6/1936	Weightman et al.	415/213 R
2,715,814	8/1955	Barr	415/219 A
2,753,808	7/1956	Kluge	416/183
2,907,278	10/1959	Emerick	415/206
3,489,340	1/1970	Holzhausen	415/204
3,788,765	1/1974	Rusak	415/213 R

FOREIGN PATENTS OR APPLICATIONS

830,542	2/1952	Germany	415/147

Primary Examiner—Henry F. Raduazo
Attorney, Agent, or Firm—Donald R Comuzzi, Ted D. Lee

[57] **ABSTRACT**

A centrifugal compressor having a relatively low flow rate of less than 400 cfm at 4–6 psi comprises a housing enclosing a backward-bladed shaft mounted, motor driven impeller. The impeller blades have the configuration of air foils gradually increasing in width from their inlet tip to a point beyond the mid-length and then decreasing in width toward their discharge tip to define air flow channels between adjacent blades and the width of the channels increases linearly from the inlet end to the discharge end as a function of the channel length. The blades have a flat upper surface covered with a diffuser plate. The air flow channels discharge into a diffusion chamber which communicates with an annular pressure chamber surrounding the air inlet to the compressor, the walls of the pressure chamber defining an air nozzle to the air inlet. Auxillary vanes are positioned in the discharge end of the air flow channels.

5 Claims, 4 Drawing Figures

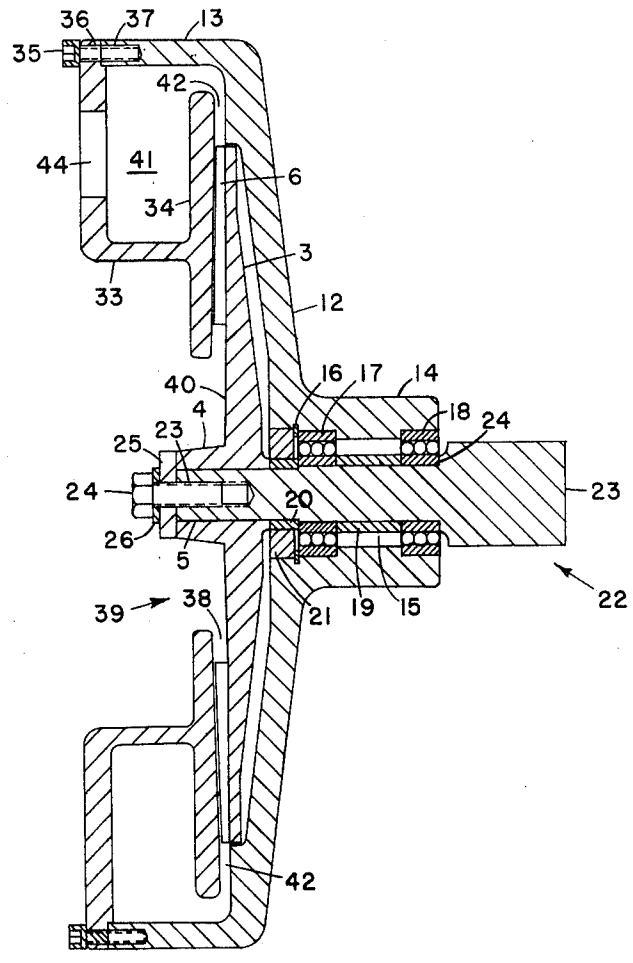

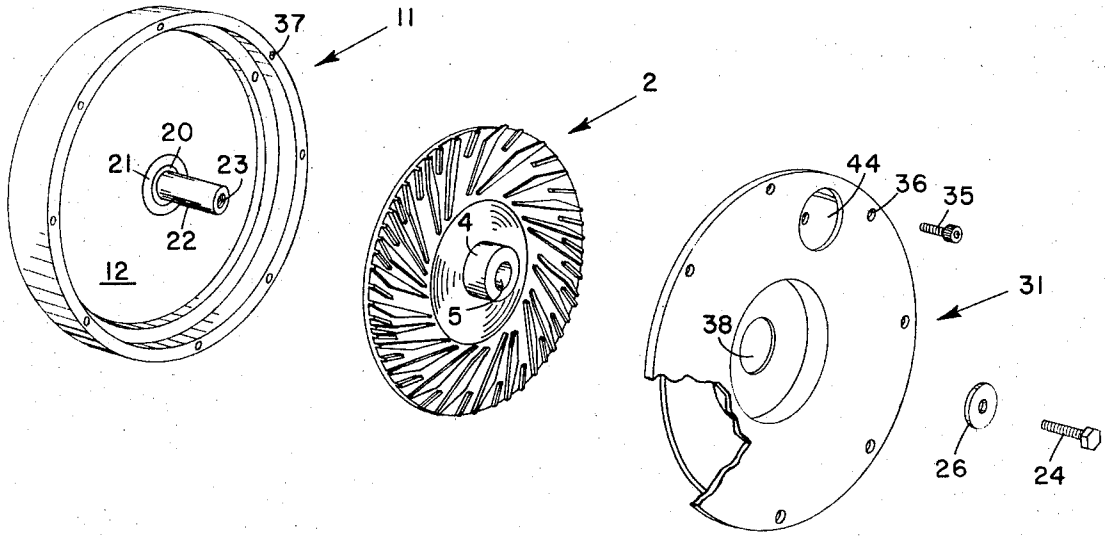
37
11
2
20
21
23
22
12
4
5
44
36
35
31
38
26
24

Fig. 1

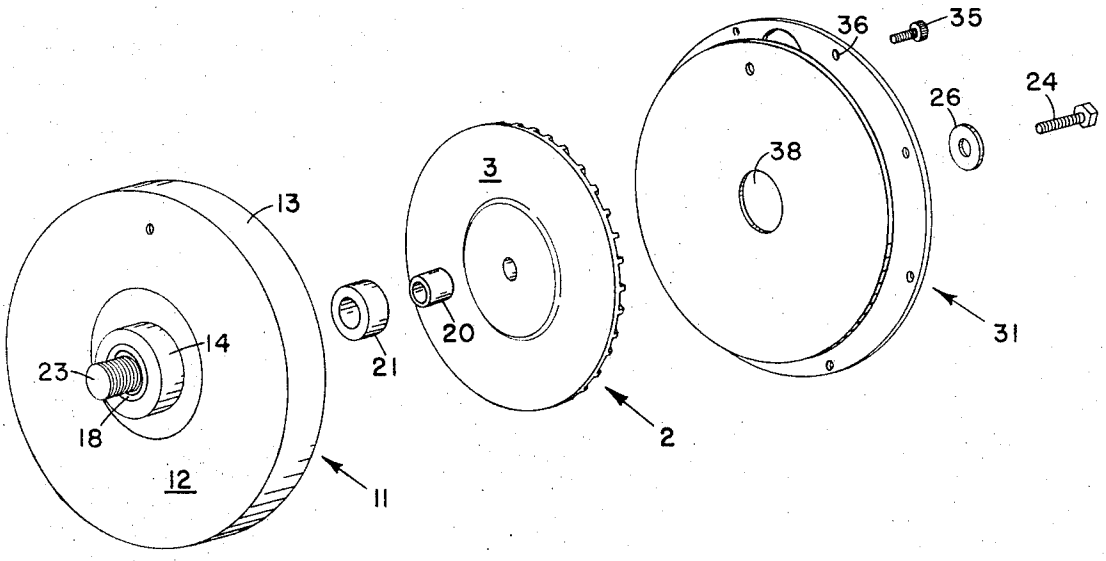
36
35
24
26
38
3
13
14
23
18
12
21
20
2
31
11

Fig. 2

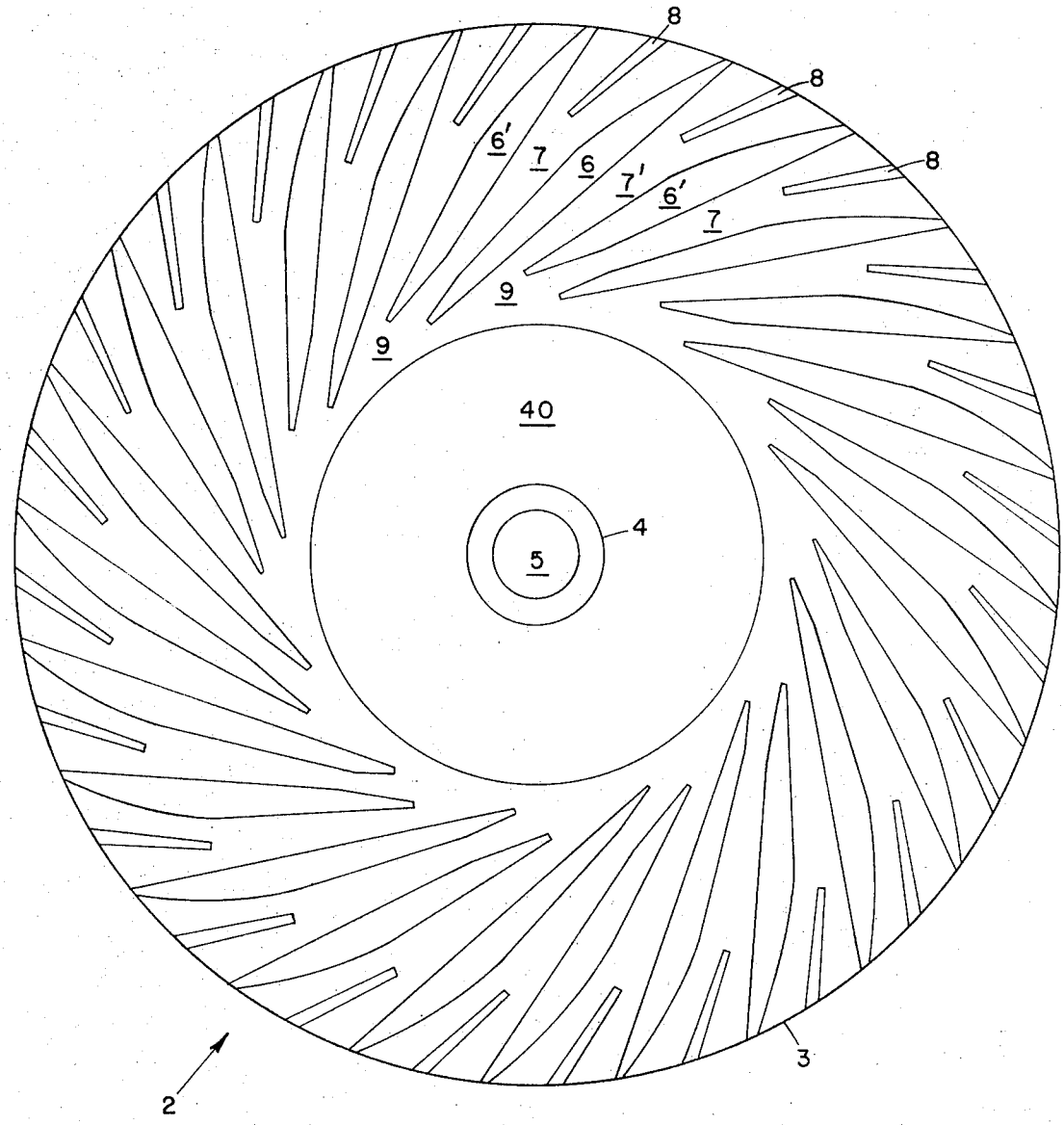

FIG. 3

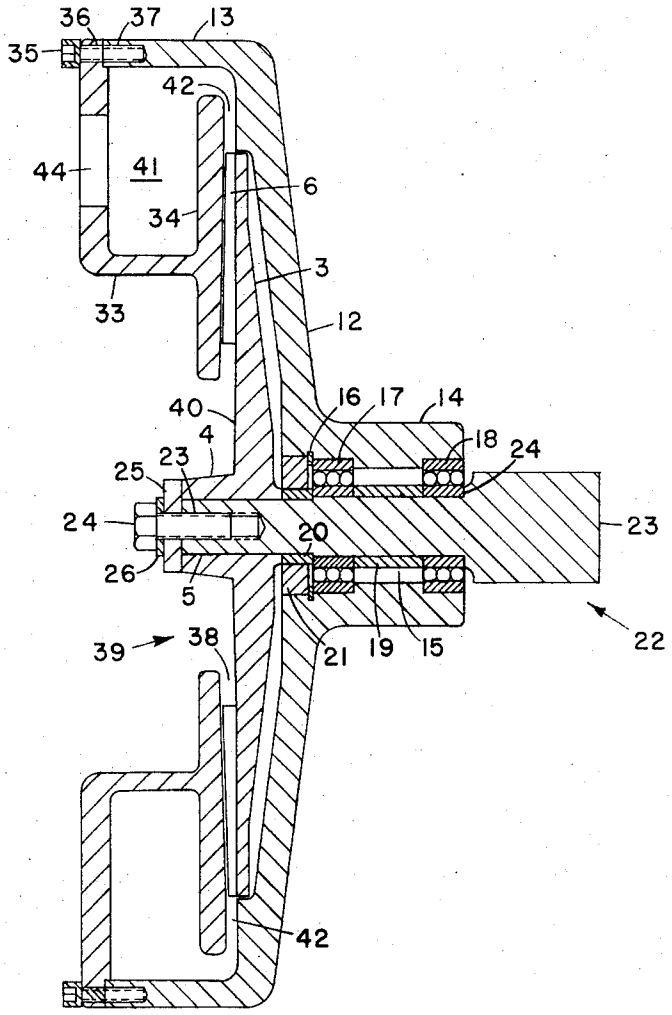
36
37
13
35
42
44
41
6
34
3
33
12
40
16
17
14
4
18
24
25
23
24
23
20
26
5
22
39
38
21
19
15
42

FIG. 4

CENTRIFUGAL COMPRESSOR

BACKGROUND OF THE INVENTION

1. Field of the Invention

The present invention relates to dynamic-type air compressors and more particularly to a centrifugal compressor or blower that will obtain low air flow output in the 5–6 psi range with relatively high efficiency and low manufacturing cost.

2. Prior Art

Prior art compressors are generally not efficient for economical use in the 5–6 psi range with relatively low flow rates.

Small positive displacement blowers have been designed for use in delivering low flow rates, however, these units have not been particularly successful due to the high cost of manufacturing and relatively low efficiency which is inherent in this type of compressor. The most common blower for such use is a rotary, two-impeller blower which employs two symmetrical figure-eight shaped impellers rotating in fixed relationship with each other. Timing gears are necessary to position the impellers accurately in relationship to each other thus increasing the cost of manufacture. Another disadvantage is the necessity of operating this type of blower at very high speeds to obtain maximum volumetric efficiency due to constant slip loss.

Low flow rates as used herein refers to flow rates in the below 400 cfm range. Likewise, compressor efficiency is defined as the hydraulic horsepower out of the compressor divided by the input horsepower into the power unit driving the compressor. Hydraulic horsepower is the product of the pressure and flow rate of the air out of the compressor. Input horsepower is defined as the shaft horsepower out of the power unit.

Dynamic-type compressors have also been considered for use in low air flow range. These are compressors in which air or gas is compressed by the mechanical action of rotating vanes or impellers imparting velocity and pressure to the flowing air. Dynamic-type machines are inherently high speed machines which perform to best advantage and with greater efficiency for large capacity requirements. The axial flow dynamic-type compressor is best suited for the very high air flow requirements and the centrifugal flow compressor is more economical at the lower flow rates. Of course, even the lower flow rates for which centrifugal compressors are normally considered are substantially above that contemplated in the present invention. As a rule of thumb, the minimum discharge flow rate for a centrifugal compressor is generally considered to be 400 cfm.

There are many advantages to using a centrifugal compressor for low air flow requirements, a very important one being the low manufacturing cost. Other advantages will become apparent in the following discussion.

The impeller of a centrifugal compressor imparts energy to the flowing air by means of centrifugal force. The impeller consists of a number of blades rotating on a shaft. The blades are either open type, or are mounted on a hub disc or positioned inside a housing to provide air passages from the air inlet at the center of the impeller to the air outlet at the outer periphery of the impeller. The impeller blades are either straight or curved blades and extend either radially from the center toward the outer periphery of the impeller or extend at an angle to the radius and away from the direction of rotation. The latter type being generally referred to as a backward-bladed impeller and the blades may be either curved or straight. The blade design determines to a large extent the capacity and pressure range of the compressor and is therefore the most complex component in the compressor.

The principal of the operation of a centrifugal compressor requires that the air be pulled into the rotating blades toward the center of the impeller and accelerated to high velocity and then the velocity must be reduced significantly to convert the kinetic energy to static energy and increase the pressure. A controlled deceleration of the air flow is essential in order to avoid high energy losses in the conversion phase.

Deceleration of the air flow is accomplished by increasing the cross-sectional area of the air-flow channels toward the outer periphery of the impeller. The deceleration is accomplished by the air-flow channel configuration which is determined by the design of the blades.

The known types of centrifugal compressors are designed for high volume air flow and controlled deceleration is obtained by contouring the upper edge of the blades with rather complex surface contours which are expensive to manufacture. Of course, the expense is not so critical in a large capacity compressor.

Due to the increasing need for a low volume air compressor operating at relatively low pressures, it became an object of this invention to provide a low volume compressor that will overcome many of the problems encountered in the prior art.

It is a primary object of this invention to provide a centrifugal compressor having a novel impeller design suitable for delivering a relatively low volume of air (below 400 cfm) in the 5–6 psi range with reasonable efficiency.

More particularly, it is an object of this invention to provide an impeller with novel vanes in the shape of air foils and which avoids the need for complex upper edge blade contours.

It is still another object of this invention to provide a low volume compressor that can be manufactured very economically.

SUMMARY OF THE INVENTION

The invention consists of a centrifugal compressor having a two section housing surrounding an impeller. A diffuser plate is constructed as an integral part of one section of the housing and is positioned to define a diffuser passage or chamber surrounding the circumferential edge of the impeller.

The diffuser passage communicates with an annular chamber or accumulator for collecting the pressurized air. The accumulator is positioned circumferentially around the front of the compressor and surrounds the air inlet to the impeller, the inner circumferential wall of the accumular defining an inlet nozzle to the air inlet. Air outlet ports or nozzles are provided in the accumulator to discharge compressed air from the accumulator.

In order to accomplish the primary objective of this invention, namely to obtain low air-flow volumes (below 400 cfm) at 4–6 psi, it is necessary to reduce the combined cross-sectional area of all the air-flow channels. This must be accomplished in such a manner as to reduce friction losses and manufacturing costs. If prior

art practices were employed, impeller blade heights would be reduced to reduce the cross-sectional area of the air passages and the upper surface contour of the blades would have a complex configuration to decelerate air flow with the attendant high cost of manufacture. Of greater concern, however, is the low hydraulic efficiency of such a design for low volume flow. This low efficiency results from the large increase in the "wetted area" of the impeller air passages or channels in relation to the air flow volume. The "wetted area" being the area around the periphery of the channel which produces skin friction with the flowing air.

The impeller blades of this invention have been designed to reduce the wetted area in relation to the cross-sectional area of the channel. Furthermore, the upper surface of the blades are designed to eliminate the complex upper surface contour.

The impeller is provided with novel air foil blades or vanes with a straight upper surface contour. The air foil blades are backward-bladed, that is, they are installed at an angle to the impeller radius and away from the direction of rotation. The inlet tip of the vanes are substantially tangent to the air inlet and intersect the radius at an angle of approximately 30° at the discharge tip. The vanes are shaped like air foils increasing in width from the inlet tip and discharge tip toward the middle.

The impeller is mounted on a rotating drive shaft which extends through the rear compressor housing section. The shaft has means for connecting to a suitable power source such as an electric motor or internal combustion engine.

BRIEF DESCRIPTION OF THE DRAWINGS

FIG. 1 is an exploded perspective front view with a partly cut section, of the compressor of this invention.

FIG. 2 is an exploded perspective rear view of the compressor.

FIG. 3 is a perspective view of the impeller.

FIG. 4 is a cross-section view of the centrifugal compressor of this invention.

DETAILED DESCRIPTION OF THE PREFERRED EMBODIMENT

The centrifugal compressor of this invention consists of an impeller **2** enclosed between a back housing section **11** and a front housing section **31.**

The back section consists of a rear wall **12** and a forwardly extending circumferential side wall **13.** The rear wall **12** has a hub portion **14** extending rearwardly therefrom and surrounding a shaft bore **15.**

Positioned within the bore **15** are sutable antifriction bearings which are identified as a front bearing **17** and rear bearing **18** held in spaced relationship by a sleeve **19** mounted around a drive shaft **22** and inside the bore **15.** A spacing sleeve **20** is positioned inside the bore **15** and frictionally engages front bearing **17** and the impeller **2.** Concentric with and rotatably surrounding the spacing sleeve **20** is a seal ring **21.** Interposed between the seal ring **21** and the bearing **17** is a snap ring **16** to take the forward thrust of the bearing **17.**

The drive shaft **22** extends through the bore **15** and is rotatably mounted in the bearings **17** and **18.** In the embodiment depicted in the drawings, the shaft **22** has a belt sheave portion **23** positioned on the outside of the hub portion **14.** A shoulder **24** on the sheave portion **23** abuts the rear bearing **18.**

The impeller **2** consists of a circular disc **3** with a hub portion **4** integral therewith, said hub portion having an axial bore **5** extending therethrough for receiving the drive shaft **22.** The hub portion **4** is mounted on the front of the disc **3** and extends axially therefrom. A cover plate **25** is mounted over the hub **4** and may be formed integral with the hub **4** or fastened thereto by welding. An air inlet zone **40** on the front of the disc **3** extends radially from the hub portion **4** to the inlet tip of air foil vanes **6** and **6'**, said air foil vanes defining air flow channels **7** and **7'** therebetween. The impeller is preferably formed as an integral casting of suitable material such as a rigid plastic or metal.

The air foil vanes **6** and **6'** extend from the outer circumference of the air inlet zone **40,** outwardly to the outer periphery of the impeller disc **3.** The vanes **6** and **6'** are substantially tangent to the outer circumference of the inlet zone **40** at their inlet tips and extend outwardly therefrom and away from the direction of rotation, at an angle to the impeller radius.

The air foil vanes have a substantially flat upper surface and are substantially straight along their one side from the inlet tip to the discharge tip, the other side being substantially convexly curved from the inlet tip to the discharge tip thus providing a vane of increasing width from the inlet tip along its length to a point beyond the midlength and then decreasing in width to the discharge tip. A portion of the convexly curved side may be flattened for economy in machining. The air flow channels **7** and **7'** defined by adjacent air foil vanes **6** and **6'** increase gradually in width from near the air intake end to the discharge end. The immediate air intake end of alternate channels **7** may be slightly widened to facilitate air intake. Likewise, alternate air foil vanes **6'** are shorter than the adjacent air foil vanes **6** to define air inlet pockets **9** at the inlet to adjacent channels **7** and **7'** to facilitate the intake of air into the air flow channels **7** and **7'**. The width of the channel increases linearly as a function of the channel length. This gradual increase in channel width produces a substantial linear deceleration of the air flow thereby converting the kinetic energy of the air to static pressure.

A short substantially constant width secondary vane **8** is mounted near the outer periphery of the disc between each pair of air foil vanes **6** and **6'**. These short vanes **8** are positioned in the discharge end of the air flow channel to break up the formation of eddies or vortexes in the flowing air prior to entry into the diffusion passage **42.**

The drive shaft **22** has an elongated portion extending through the axial bore **5** in the disc **3.** A threaded bore **23** extends axially into the elongated shaft portion and receives a threaded bolt **24** which extends through a hole in hub cover **25.** A washer **26** may be positioned between the head of bolt **24** and the cover **25.**

Front housing section **31** has a front wall portion **32** connected to the front edge of the circumferential side wall **13** of the back housing section **11** and extending radially inwardly therefrom to integrally connect to an axially extending circumferential wall portion **33.** The circumferential wall portion **33** is connected to a diffuser plate **34,** said diffuser plate being substantially parallel to the front wall portion **32.** The front housing section **31** is mounted over the front of the impeller means **2** with the front wall portion **32** being connected to the side wall **13** of the back housing section **11** by means of suitable fastening means such as bolts **35** ex-

tending through a bore **36** in the front wall portion **32** and into threaded bore **37** in the side wall **13** to define an annular pressure chamber **41**.

The diffuser plate is positioned adjacent and parallel to flat upper surface of the air foil vanes **6** and **6'** to enclose air flow channels **7** and **7'**. An air intake opening **38** is provided in the center of the diffuser plate **34** to permit air to be pulled into the compressor by the impeller **2**. The circumferential wall portion **33** of front housing section **31** defines an air inlet nozzle **39** directing air to the air inlet opening **38**.

The diffuser plate **34** is spaced from the rear wall **12** and side wall **13** of the back housing section **11** to provide a diffusion chamber or passage **42**. The air flow channels **7** and **7'** discharge air into the diffusion chamber **42** for final conversion of the kinetic energy into static pressure before the air enters the annular pressure chamber **41**. As can be seen from the drawings, the diffusion chamber **42** communicates with the pressure chamber **41** around the entire periphery of chamber **41**.

Compressed air is discharged from the pressure chamber **41** through suitable discharge openings such as opening **44** extending through the front wall **32** of front housing section **31**. While only one such discharge opening has been depicted, it will be understood that any desired number may be provided from the pressure chamber **41**. Furthermore, the discharge opening may be provided in either side wall **13** or front wall **32**.

Having thus described the preferred embodiment of my centrifugal compressor wherein flow has been restricted to a relatively low volume by the novel air foil vane design, reference is now directed to the appended claims for a definition of the scope of my invention.

I claim:

1. A centrifugal air compressor comprising a housing enclosing an impeller, an air inlet in said housing to the air inlet zone of said impeller, said impeller having a plurality of circumferentially arranged air foil vanes extending outwardly from said air inlet zone at an angle to the impeller radius and opposite the direction of rotation, said air foil vanes gradually increase in circumferentially width from the inlet tip to beyond their mid length and then decrease in circumferentially width to the discharge tip, said air foil vanes have a free flat upper surface adjacent the housing, adjacent air foil vanes define an air flow channel therebetween, said channel gradually increasing in width from near the air intake end to the air discharge end, said width increasing linearly as a function of the channel length, said air inlet zone of said impeller being at the center portion thereof and said air foil vanes are substantially tangent to the outer circumference of said air inlet zone, the length of alternate air foil vanes is less than the adjacent air foil vane to define an air inlet pocket at the inlet to each pair of adjacent air flow channels.

2. The apparatus of claim **1** wherein an auxillary vane of substantially constant width is positioned in the discharge end of each air flow channel.

3. The apparatus of claim **2** wherein the compressor housing comprises a front housing section and a back housing section, the back housing section consists of a rear wall with a central bore receiving an impeller drive shaft, and a forwardly extending circumferential sidewall connected to the front housing section, said impeller being rotatably mounted on said drive shaft, said front housing section consists of a front wall portion connected to the front edge of the circumferential sidewall of the back housing section and extending radially inwardly therefrom to engage and connect to an axially extending circumferential wall portion, said axial extending circumferential wall portion being connected to a diffuser plate at right angles thereto, said diffuser plate enclosing the front surface of the impeller and extending parallel to said impeller vanes and spaced a small distance therefrom, said diffuser plate having an air inlet opening in the center portion thereof.

4. The apparatus of claim **3** wherein said front housing section and said circumferential sidewall of said back housing section encloses an annular pressure chamber positioned forwardly of said diffuser plate, said diffuser plate and said back housing section defining a diffusion chamber around the outside periphery of said impeller, said diffusion chamber communicating with said pressure chamber.

5. The apparatus of claim **4** wherein the axially extending circumferential wall portion defines an air inlet nozzle surrounding the air inlet opening in said diffuser plate, and wherein said pressure chamber has at least one discharge opening therefrom.

* * * * *