(12) UK Patent Application (19) GB (11) 2 249 259 (13) A

(43) Date of A publication 06.05.1992

(21) Application No 9119746.7

(22) Date of filing 16.09.1991

(30) Priority data
(31) 9020296 (32) 17.09.1990 (33) GB
9023727 01.11.1990

(51) INT CL5
A45C 11/32

(52) UK CL (Edition K)
A4G G19 G1

(56) Documents cited
GB 2222514 A GB 2217979 A GB 0528705 A
US 4300610 A US 4037716 A

(58) Field of search
UK CL (Edition K) A4G
INT CL5 A45C 11/32, A47G 29/10

(71) Applicant
Seymour Maitland-Kraft
Suite 9, 60 Duke Street, London, W1M 6JR,
United Kingdom

(72) Inventor
Seymour Maitland-Kraft

(74) Agent and/or Address for Service
Venner Shipley & Co
368 City Road, London, EC1V 2QA, United Kingdom

(54) Key holder

(57) A key holder comprises a card 1 having a recess 4 in one face. The bottom (5, fig 2) of the recess 4 is coated with adhesive material 7, e.g. double sided adhesive tape, which enables the key 8 to be releasably stored in the recess 4. The card 1 may have slots (14a, 14b, fig 4) formed along the longitudinal edges to receive a cover, which may be a credit card (15, fig 5). The card 1 may be made from plastic, and have a region 9 adapted to receive writing. The cards may be stored in a storage box (10, fig 7).

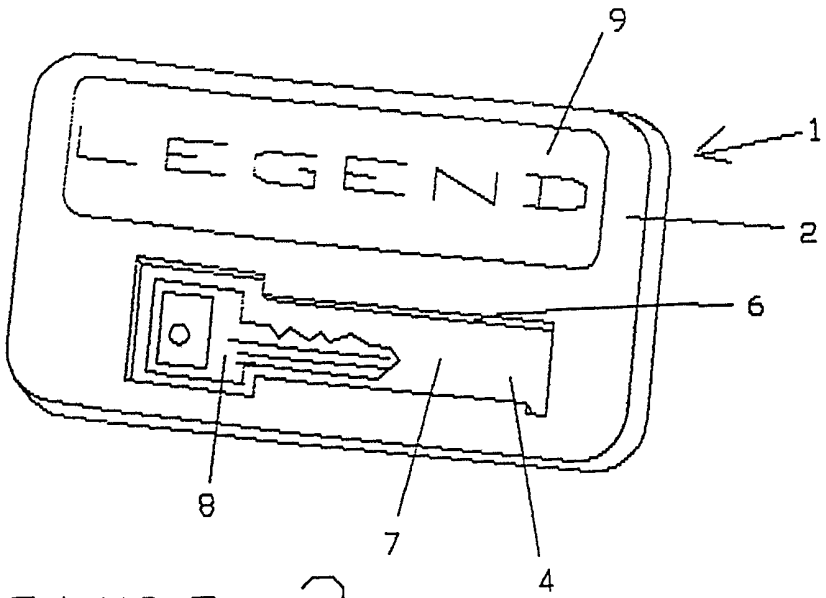

Figure 3

GB 2 249 259 A

At least one drawing originally filed was informal and the print reproduced here is taken from a later filed formal copy.

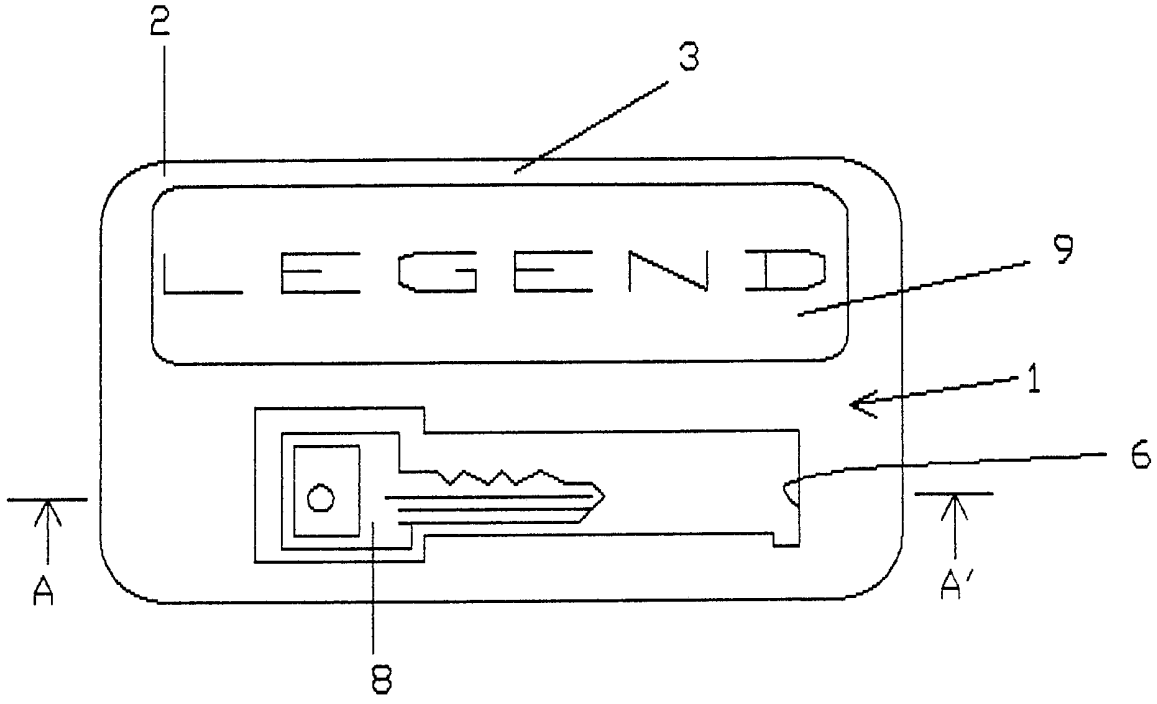

Figure 1

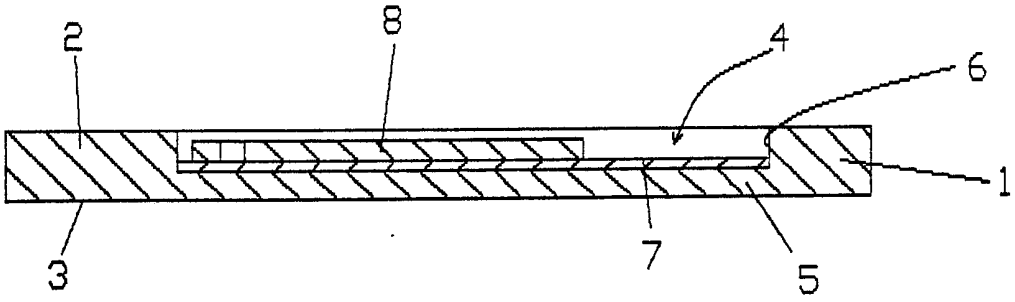

Figure 2

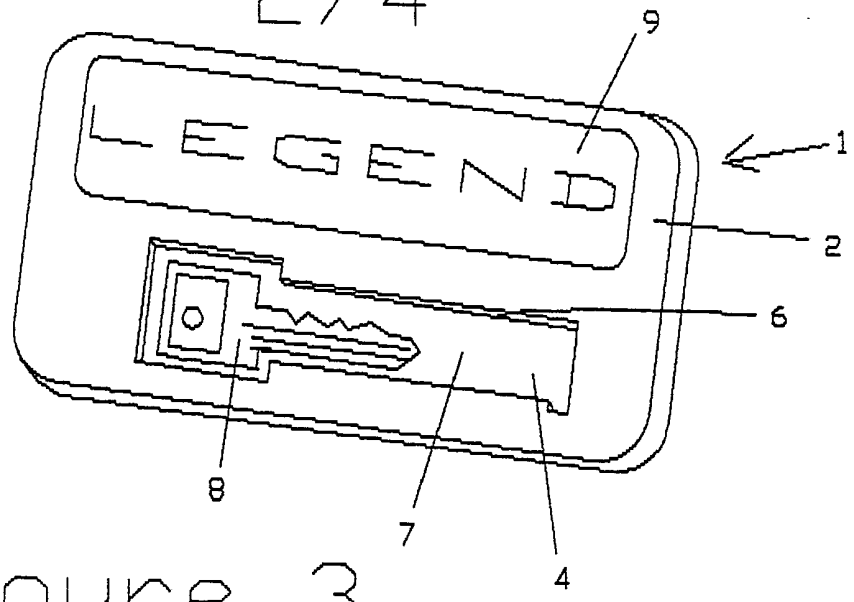

Figure 3

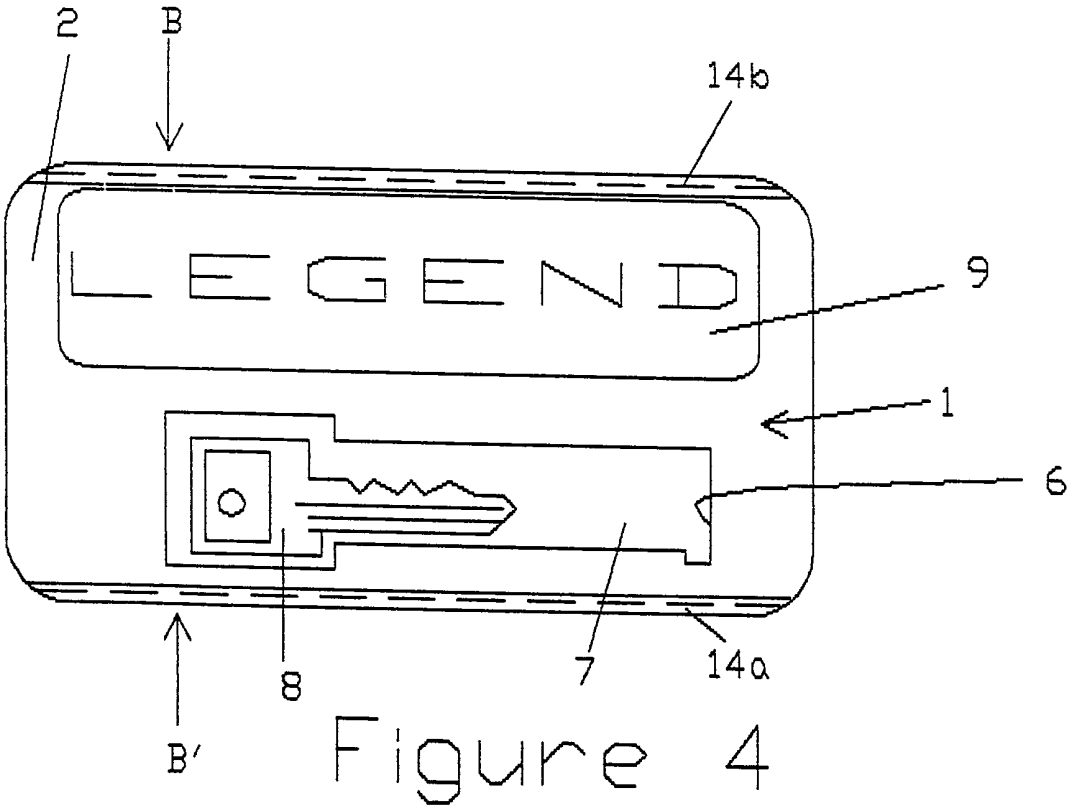

Figure 4

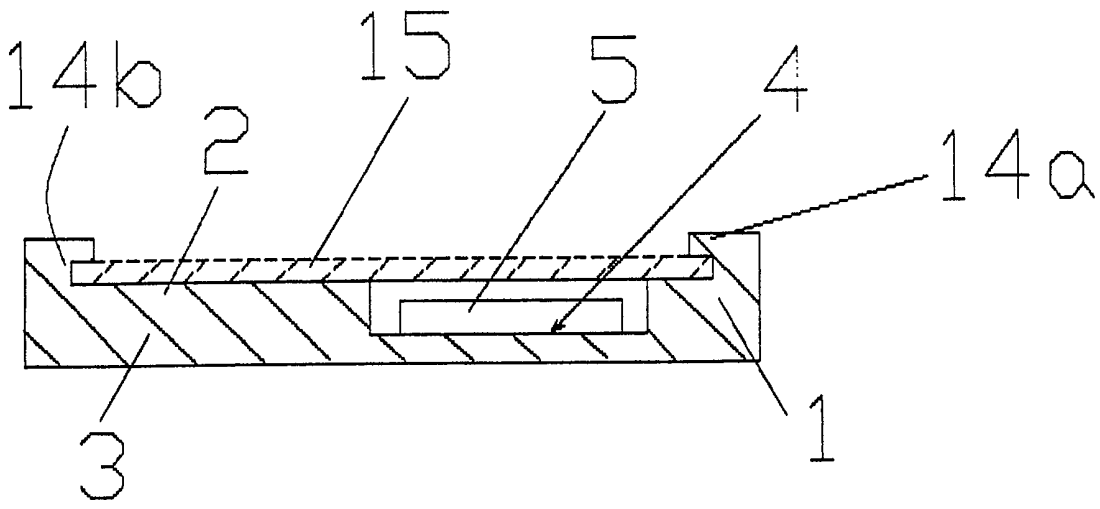

Figure 5

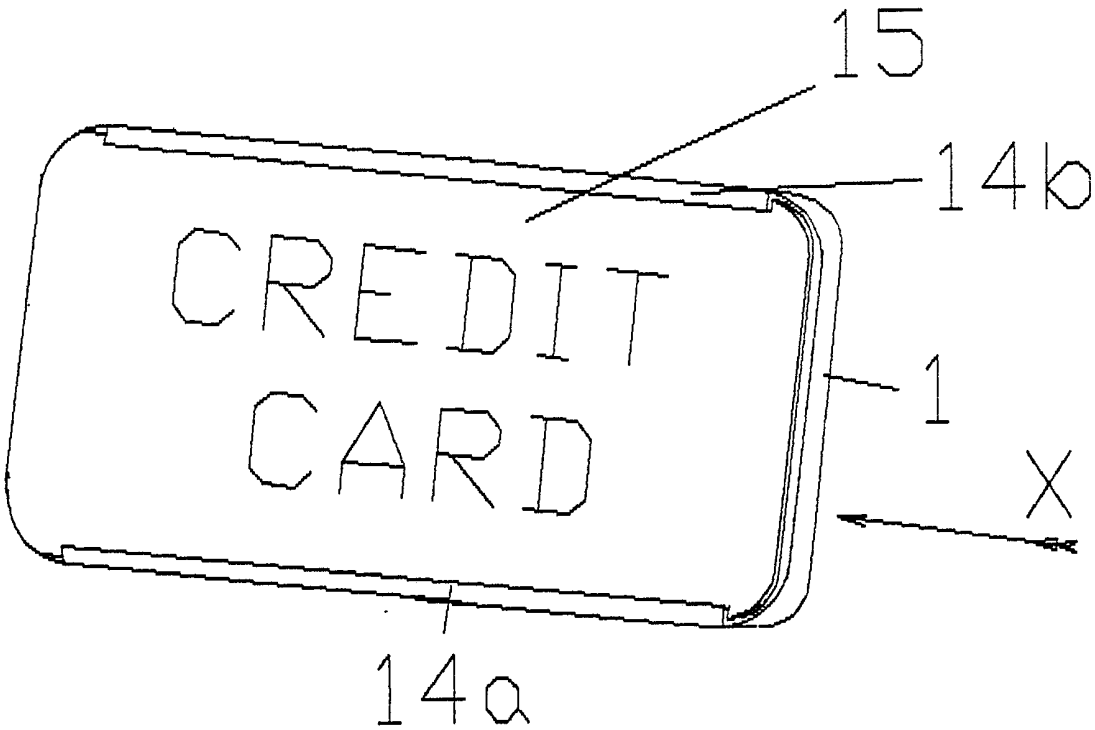

Figure 6

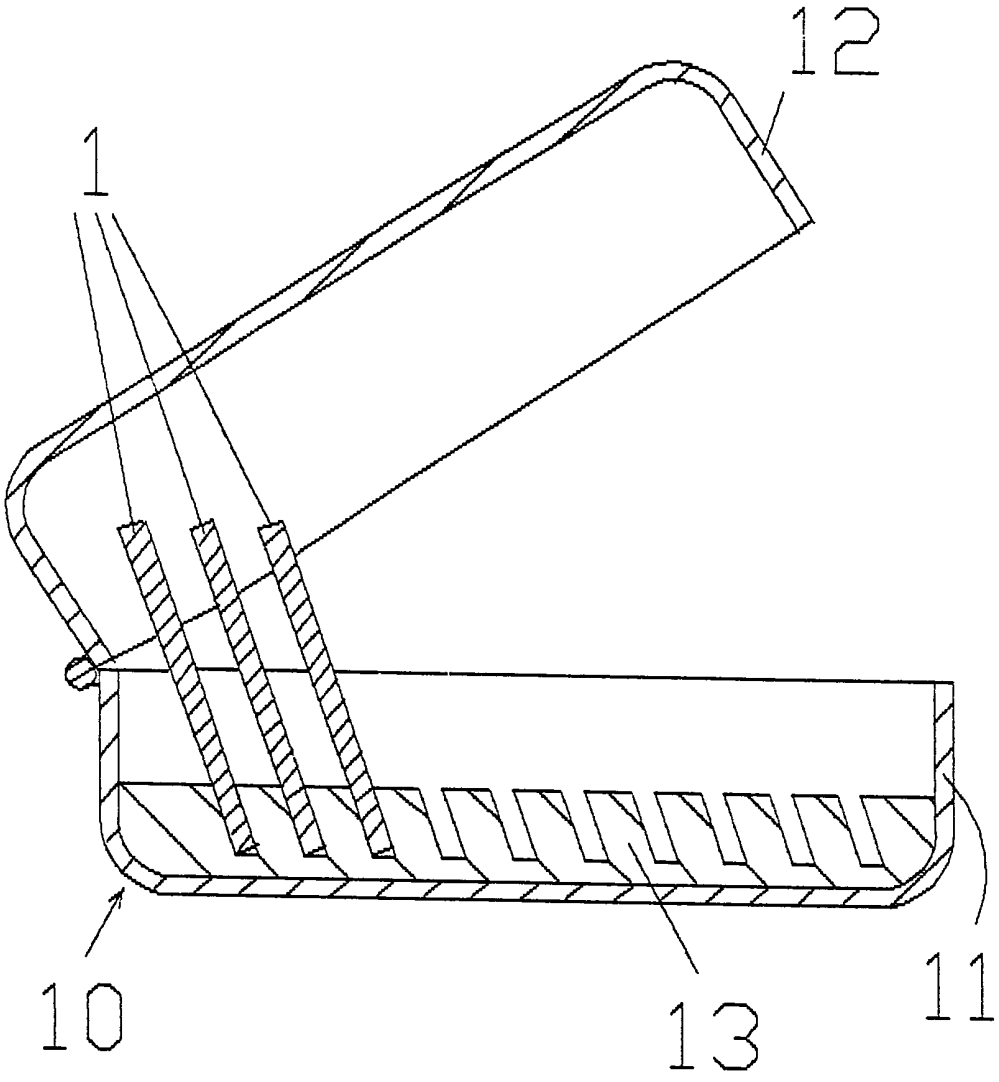

Figure 7

KEY HOLDER

DESCRIPTION

This invention relates to a holder for a key.

A known key holder consists of a card of plastics material, typically of the size of a conventional credit card, which includes an opening through its major surface into which a key of a particular size can be push-fitted so as to be gripped by the peripheral edges of the opening and retained therein. A disadvantage of the key holder is that different shaped openings are required for different key designs so that a plurality of different key holders are required to accommodate different keys.

An object of the invention is to overcome this difficulty.

In accordance with the invention there is provided a holder for a key, comprising a card and adhesive means for releasably holding the key on the card.

Thus, in accordance with the invention, a plurality of different key shapes can be releasably held on the card so that a single design can accommodate and store a plurality of different key shapes and sizes.

The card conveniently includes a recess and the adhesive means is disposed in the recess to retain the key releasably therein.

Conveniently, the card has a symetrical quadrilateral periphery, for example of the size of a conventional credit card. The recess may include a base surface bounded by an upstanding peripheral wall, the base surface being covered with said releasable adhesive means.

The releasable adhesive means may comprise a double sided self-adhesive tape.

Conveniently, the card is moulded in plastics material. The card may be provided with a region on which the user can write a legend, for example information about

the key. The card may be preprinted with advertising material.

Advantageously, the card includes means to permit a cover to be held in place over the recess. Conveniently, the cover comprises a credit card so that the holder can be used as a credit card holder in addition to holding a key.

The invention also extends to a storage device for keys, comprising a storage box and a plurality of the holders according to the invention stored in the box.

This arrangement permits keys to be stored on cards in a box in a manner analagous to a card index.

In order that the invention may be more fully understood embodiments thereof will now be described by way of example with reference to the accompanying drawings in which:

Figure 1 is a schematic side view of a key holder in accordance with the invention;

Figure 2 is a sectional view taken along the line A-A' of Figure 1;

Figure 3 is a schematic perspective view of the key holder shown in Figures 1 and 2; and

Figure 4 is a schematic side view of a key holder in accordance with the invention, with means to retain a credit card;

Figure 5 is a sectional view taken along the line B-B' of Figure 4, showing the credit card in hatched outline; and

Figure 6 is a schematic perspective view of the key holder shown in Figures 4 and 5, showing a credit card overlying the recess; and

Figure 7 is a schematic sectional view of a storage device for keys in accordance with the invention.

The key holder shown in Figures 1 to 3 consists of a card 1 formed of plastics material, e.g. by moulding, having a opposed planar parallel surfaces 2, 3 with a rectangular periphery. The card is typically of the size of a conventional credit card e.g. 55 x 85 mm. A

recess 4 is formed in the surface 2 of the card 1. The recess 4 includes a planar base surface 5 parallel to the faces 2, 3 bounded by an upstanding peripheral wall 6. An adhesive material 7 covers the base surface 5. The adhesive material 7 typically comprises a double sided self-adhesive tape.

A key 8 is releasably held by the adhesive material 7 in the recess 4 for storage purposes.

Thus, in use, the key 8 can be releasably stored in the recess 4 and the card can be stored for example in the user's wallet or any other convenient location. When it is desired to use the key, it is pulled from the recess 4 by the user for use and thereafter is returned to the recess 4 and held in place by the adhesive material 7. The adhesive material 7 is selected so that the key can be removed and replaced from the recess 4 many times.

The shape of the peripheral wall 6 of the recess 4 is selected so that the recess can receive a plurality of different key designs. Thus, it will be appreciated

that the recess 4 could receive a key which is significantly longer and wider than the key 8 shown in the drawings.

In order to provide key identication or other information, the card 1 is provided with a region 9 on which the user can write a legend with a ball point pen. A further such region could be provided on the opposed surface 3 of the card.

Advertising information can be preprinted on surfaces 2 and/or 3 of the card. Thus, the card could be used as a promotional device, for example as a free gift.

The example of a key holder described above can be modified, as shown in Figures 4 to 6, in order to receive a credit card which acts as a cover for the recess that contains the key. Referring to Figures 4 and 5 the key holder consists of a card 1 of a size corresponding to a conventional credit card which has front and rear surfaces 2, 3. A recess 4 is formed in the card to receive the key and has a base surface 5 and a peripheral wall 6. An adhesive material 7 covers

the base surface 5. A key 8 is releasably held by the adhesive material 7 in the recess 4 for storage purposes.

The holder shown in Figures 4 and 5 additionally includes parallel slots 14a, 14b formed along longitudinal edges of the card 1 to provide a receptacle to receive a credit card 15. In Figure 5, the credit card is shown in hatched outline whereas it has been omitted from Figure 4 for the purposes of clarity. The credit card is shown in place in Figure 7, overlying the recess 4.

Thus the arrangement shown in Figures 4 to 6 can be used additionally as a credit card holder.

It will be appreciated that other means of locating the credit card in place may be utilised instead of the slots 14a, 14b.

Furthermore, it will be appreciated that corresponding slots could be provided in respect of the rear surface 3 of the card 1 so that interchangeable cards with

different advertising legends could be inserted on the rear surface.

Referring to Figure 7, a plurality of the key holders 1 can be stored conveniently in a storage box 10 consisting of a base 11 with a hinged lid 12, the base 11 including a slotted support 13 to receive the key holders 1, three being shown in Figure 7.

The storage device thus provides a convenient arrangement for storing keys since each key can be provided with a respective legend on a card 1 to indicate its use.

Many modifications falling within the scope of the invention can be achieved. For example, cards 1 for use in the storage box 10 may be of a different size to a conventional credit card e.g. larger. Also, the recess 4 could be formed by producing an opening through card 1, which is bridged by a double-sided self-adhesive tape.

CLAIMS

1. A holder for a key, comprising a card and adhesive means for releasably holding the key on the card.

2. A holder according to claim 1 including a recess in the card, said adhesive means being disposed in the recess to retain the key releasably therein.

3. A holder according to claim 2 wherein the recess includes a base surface bounded by an upstanding peripheral wall, said base surface being covered with said adhesive means.

4. A holder according to any preceding claim wherein the card has a symetrical quadrilateral periphery.

5. A holder according to any preceding claim wherein said releasable adhesive means comprises double-sided self-adhesive tape.

6. A holder according to any preceding claim, wherein the card includes means to permit a cover to be held in place over the recess.

7. A holder according to claim 7, wherein the cover comprises a credit card.

8. A holder according to any preceding claim, formed of plastics material.

9. A holder according to claim 8 including a region to receive a hand written legend.

10. A holder for a key, substantially as hereinbefore described with references to Figures 1 to 6 of the accompanying drawings.

11. A storage device for keys comprising a storage box, and a plurality of holders according to any preceding claim stored in the box.

12. A storage device for keys, substantially as hereinbefore described with reference to Figure 7 of the accompanying drawings.

5

Patents Act 1977
Examiner's report to the Comptroller under Section 17 (The Search Report)

Application number

9119746.7

Relevant Technical fields

(i) UK Cl (Edition K) A4G

(ii) Int Cl (Edition 5) A45C 11/32, A47G 29/10

Search Examiner

J P STEVENS

Databases (see over)

(i) UK Patent Office

(ii)

Date of Search

14.1.92

Documents considered relevant following a search in respect of claims 1-12

Category (see over)	Identity of document and relevant passages		Relevant to claim(s)
Y	GB 2222514 A	(RODEL) See especially page 5 lines 4-6, figures	7
X	GB 2217979 A	(RITSON) See especially figures, page 5 lines 1-5	1-4, 8
Y	GB 528705	(DRUMMOND) See especially figures	11
X,Y	US 4300610	(CHINA) See especially column 1 lines 20-26, figures 1 and 2	X:1-6,8, 9 Y:7,11
X	US 4037716	(MARKS) See especially figures, column 2 lines 59-68	1,4,6,8

Category	Identity of document and relevant passages	Relevant to claim(s)

Categories of documents

X: Document indicating lack of novelty or of inventive step.

Y: Document indicating lack of inventive step if combined with one or more other documents of the same category.

A: Document indicating technological background and/or state of the art.

P: Document published on or after the declared priority date but before the filing date of the present application.

E: Patent document published on or after, but with priority date earlier than, the filing date of the present application.

&: Member of the same patent family, corresponding document.

Databases: The UK Patent Office database comprises classified collections of GB, EP, WO and US patent specifications as outlined periodically in the Official Journal (Patents). The on-line databases considered for search are also listed periodically in the Official Journal (Patents).

Published 1992 at The Patent Office, Concept House, Cardiff Road, Newport, Gwent NP9 1RH. Further copies may be obtained from Sales Branch, Unit 6, Nine Mile Point, Cwmfelinfach, Cross Keys, Newport, NP1 7HZ. Printed by Multiplex techniques ltd, St Mary Cray, Kent.