May 21, 1929. F. J. HULL 1,713,965

SAND BLAST TABLE

Filed July 14, 1927 8 Sheets-Sheet 1

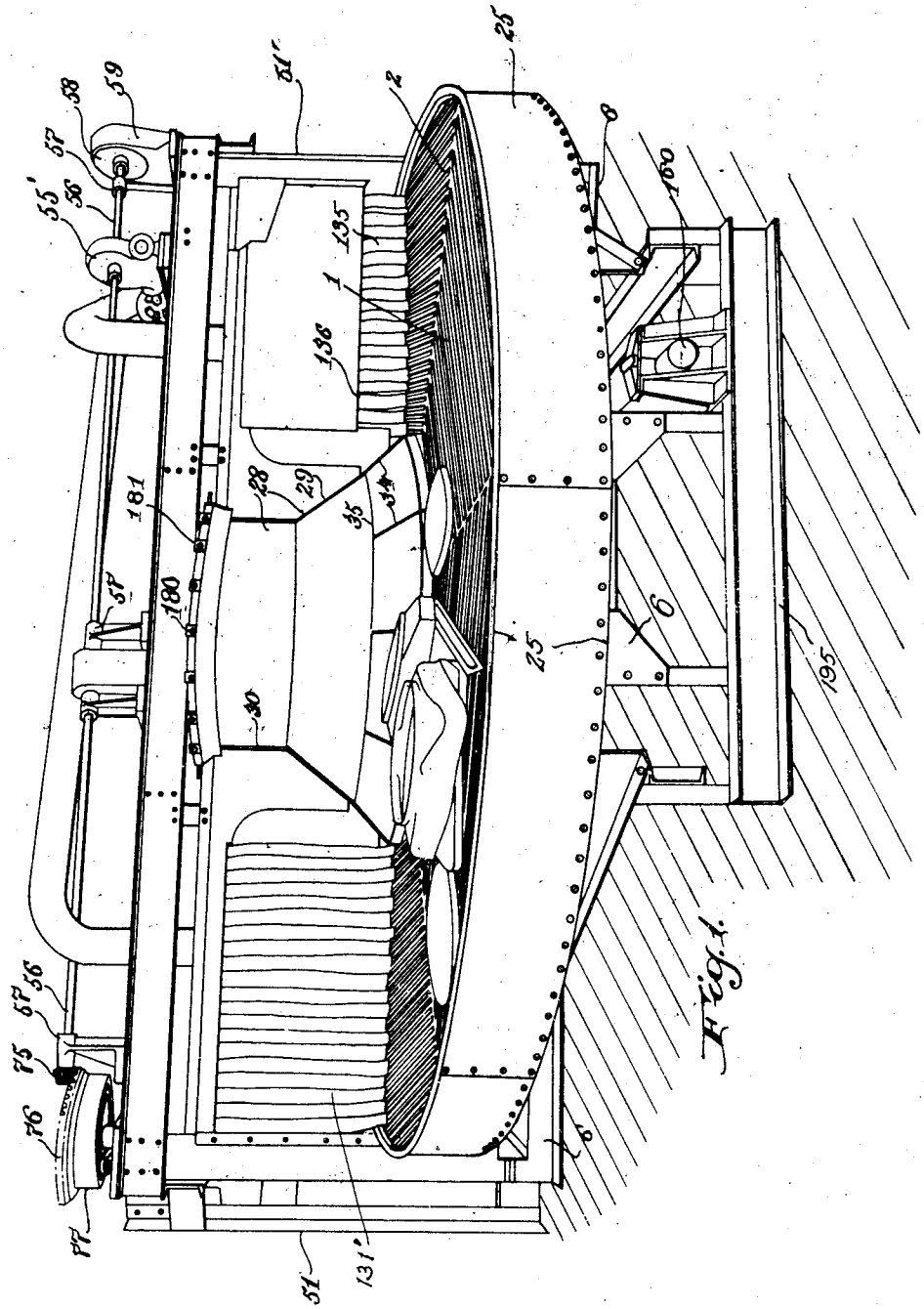

Fig. 1.

Witnesses
Porter W. Flautt

Inventor
Foster J. Hull

By Edwin Harmels

Attorney

May 21, 1929. F. J. HULL 1,713,965

SAND BLAST TABLE

Filed July 14, 1927 8 Sheets-Sheet 2

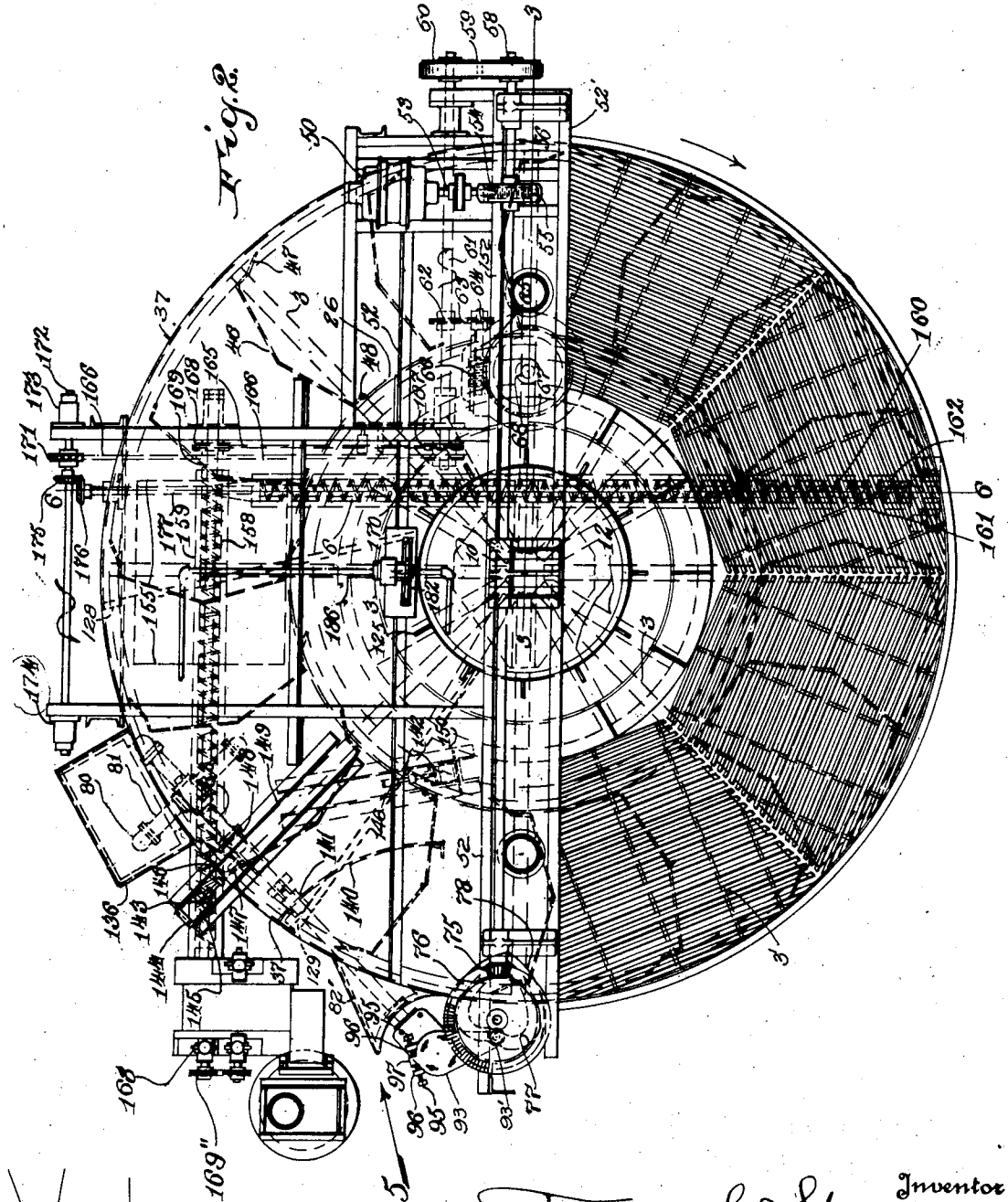

WITNESSES

Foster J. Hull

Inventor

By Edwin Hamilton

Attorney

May 21, 1929. F. J. HULL 1,713,965

SAND BLAST TABLE

Filed July 14, 1927 8 Sheets-Sheet 3

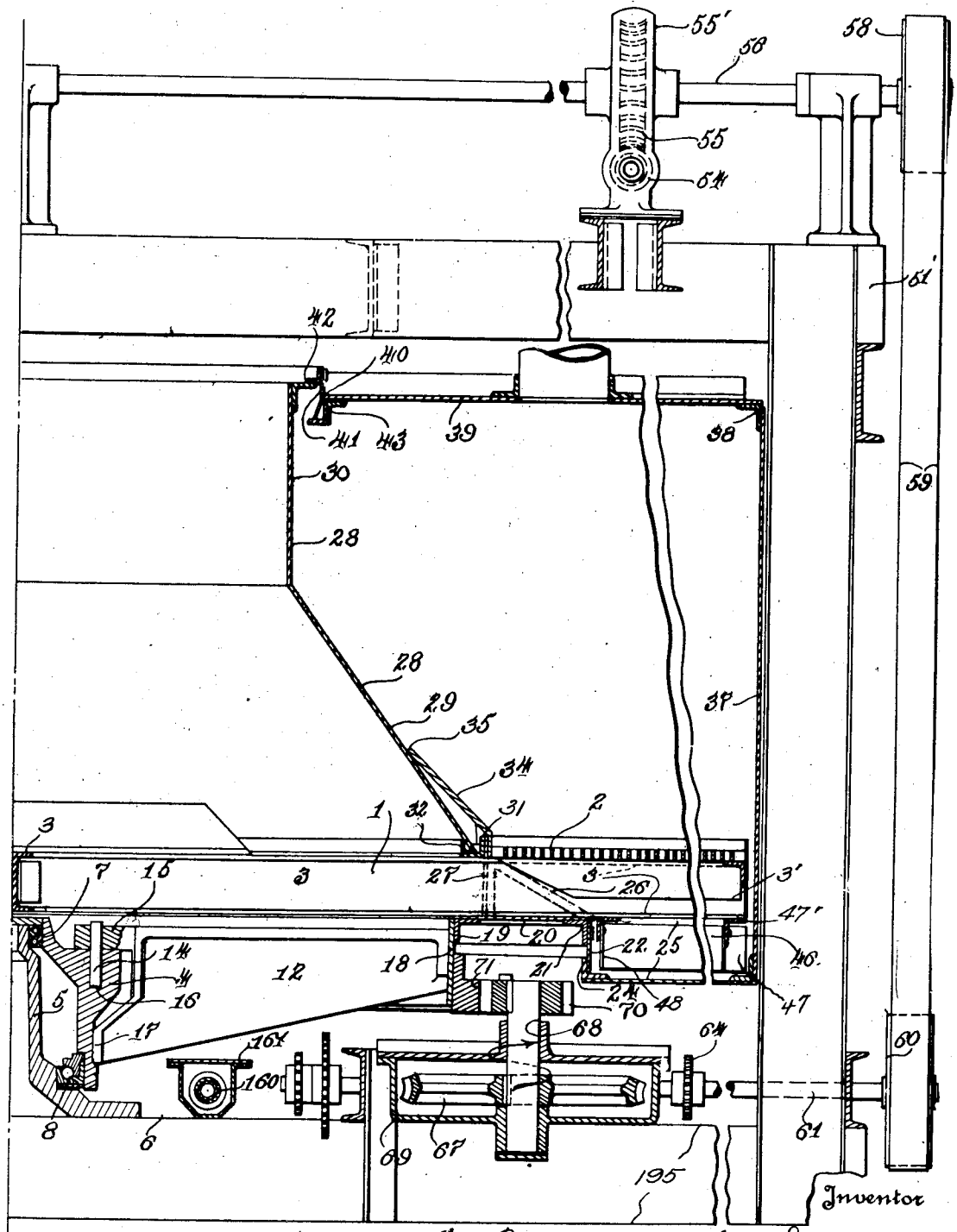

Inventor

Fig. 3.

Witnesses

Foster J. Hull

Porter H. Flaugh

By Edwin F. Lamuels

Attorney

May 21, 1929. F. J. HULL 1,713,965

SAND BLAST TABLE

Filed July 14, 1927 8 Sheets-Sheet 4

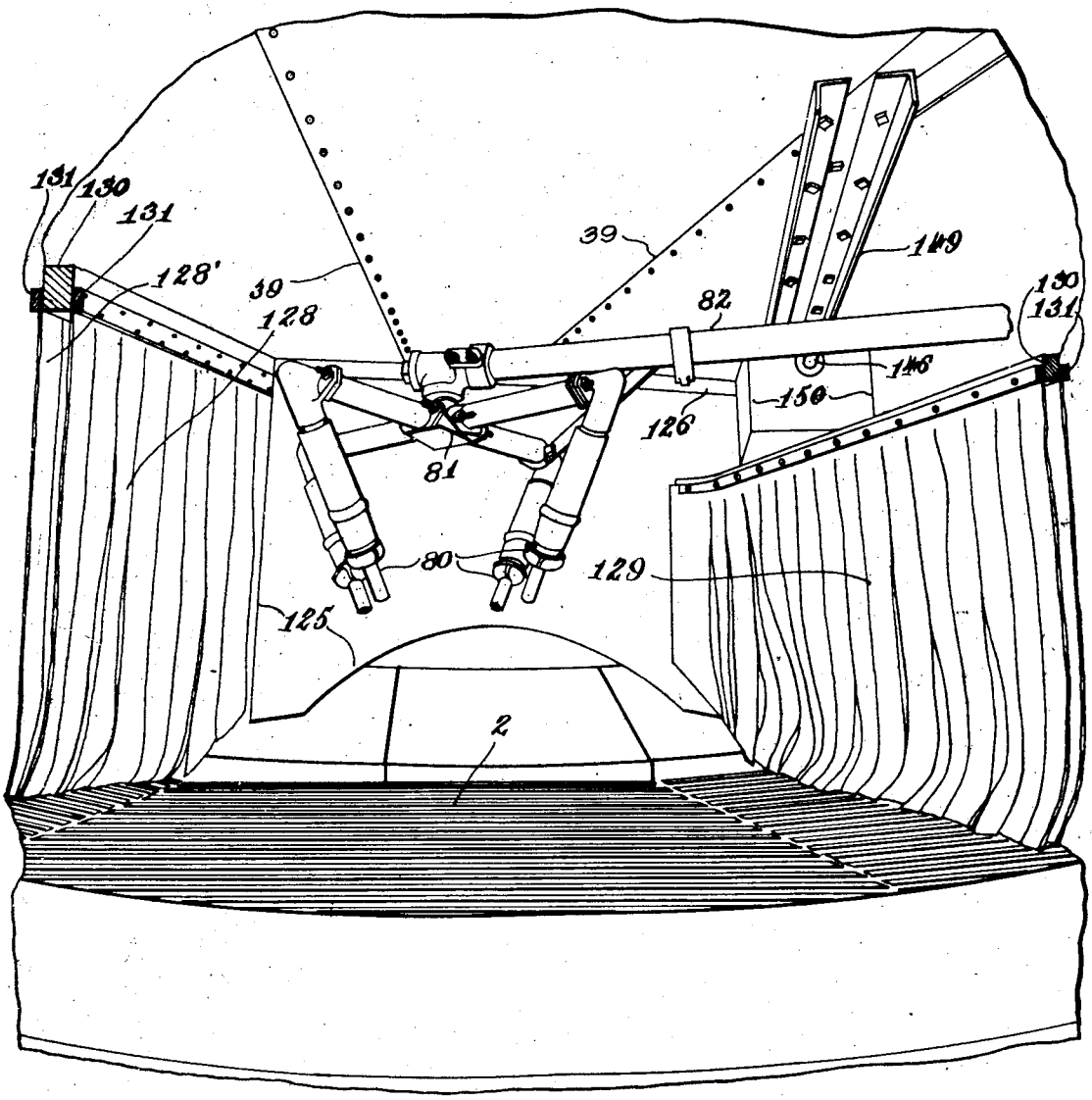

Fig. 4.

WITNESSES
Porter H. Flautt

Inventor
Foster J. Hull

By Edwin D. Cummell

Attorney

May 21, 1929. F. J. HULL 1,713,965

SAND BLAST TABLE

Filed July 14, 1927 8 Sheets-Sheet 5

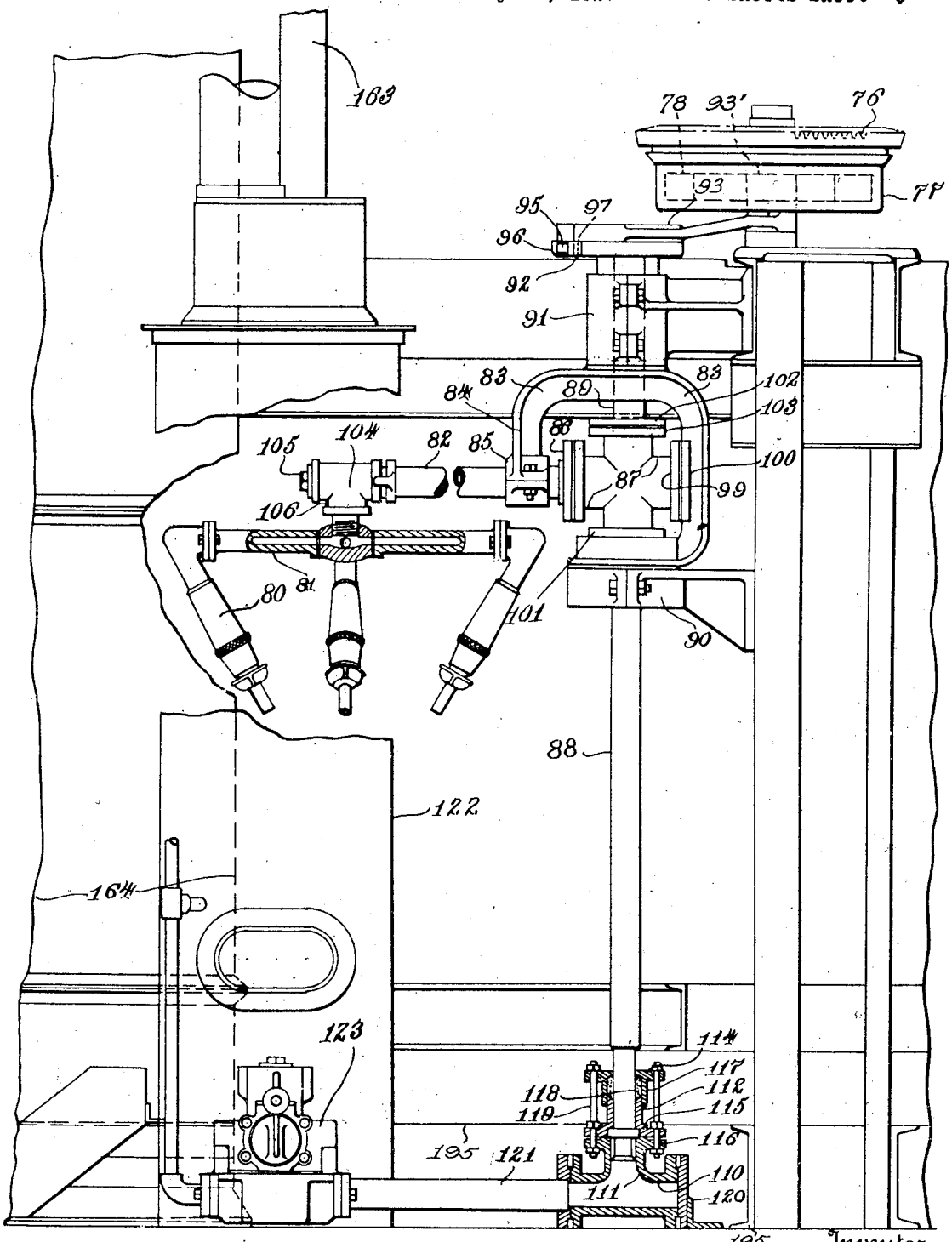

Fig. 5.

Witnesses

Inventor

Foster J. Hull

By

Attorney

May 21, 1929. F. J. HULL 1,713,965

SAND BLAST TABLE

Filed July 14, 1927 8 Sheets-Sheet 6.

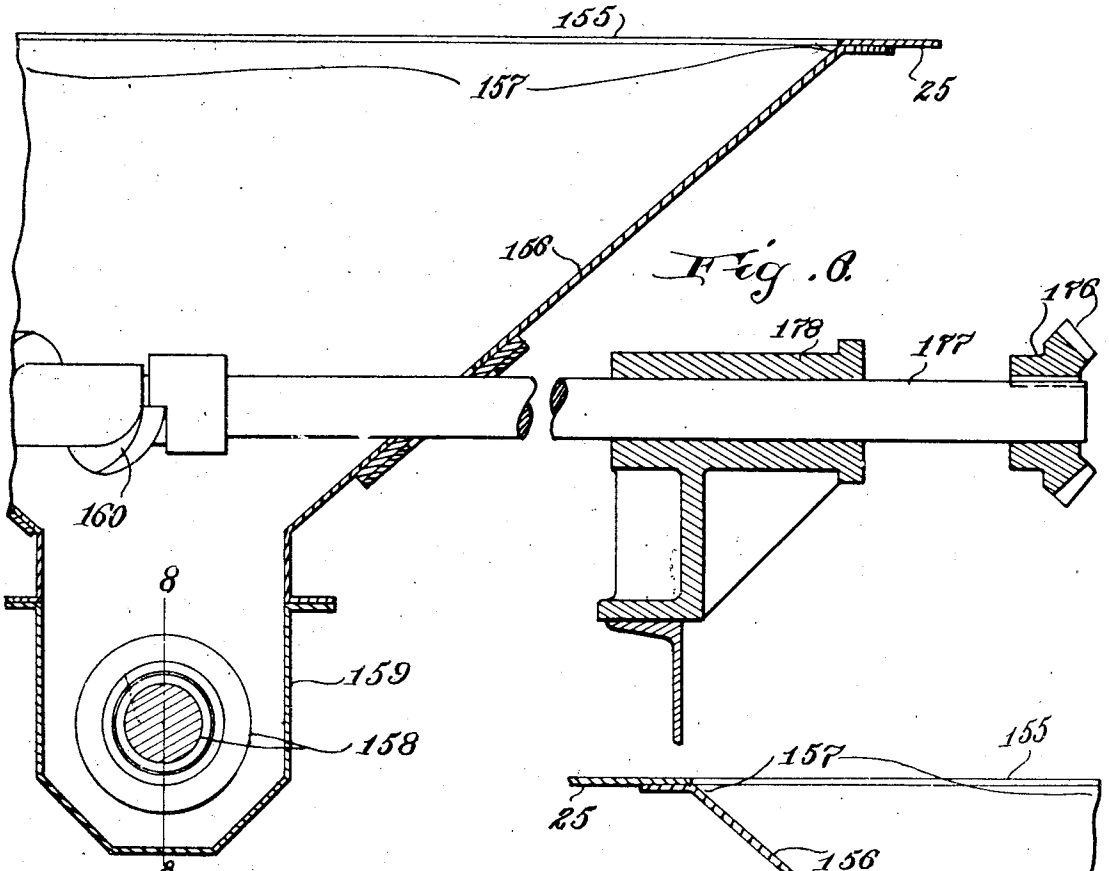

Fig. 6.

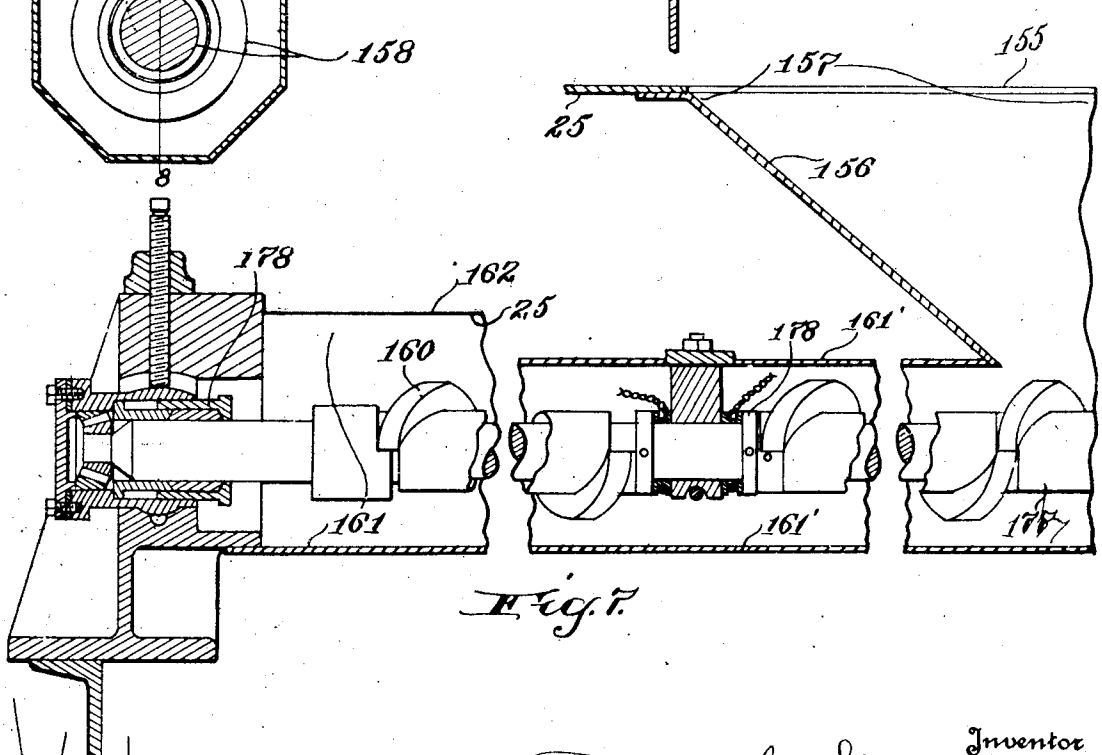

Fig. 7.

Witnesses
Foster H. Flautt

Inventor
Foster J. Hull
By Edwin Hanusch
Attorney

May 21, 1929. F. J. HULL 1,713,965

SAND BLAST TABLE

Filed July 14, 1927 8 Sheets-Sheet 7

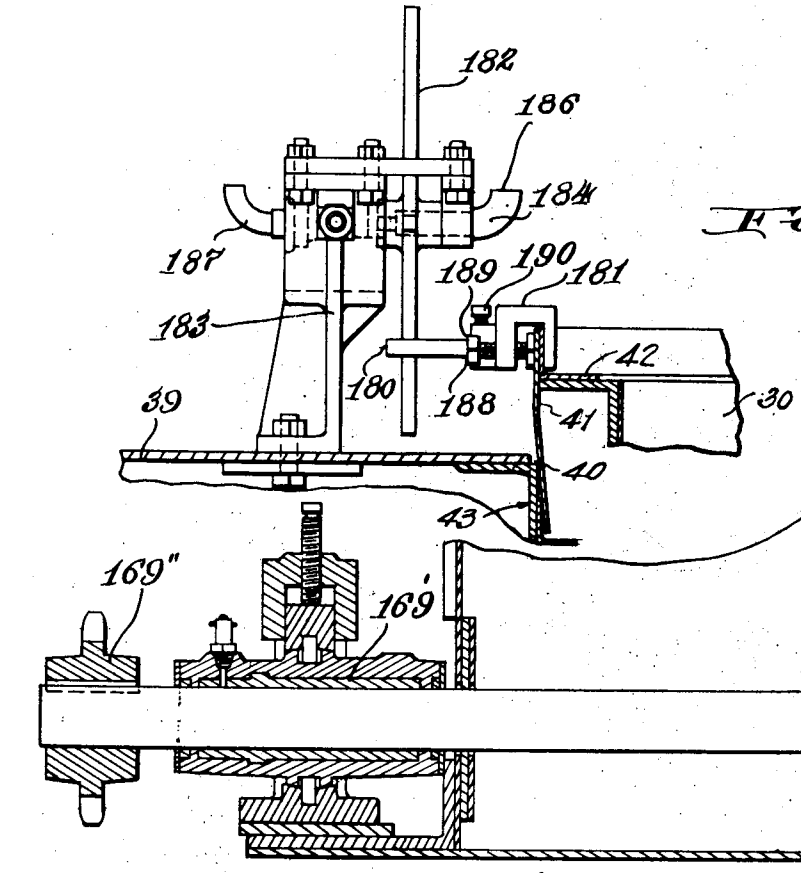

Fig. 10.

Fig. 8.

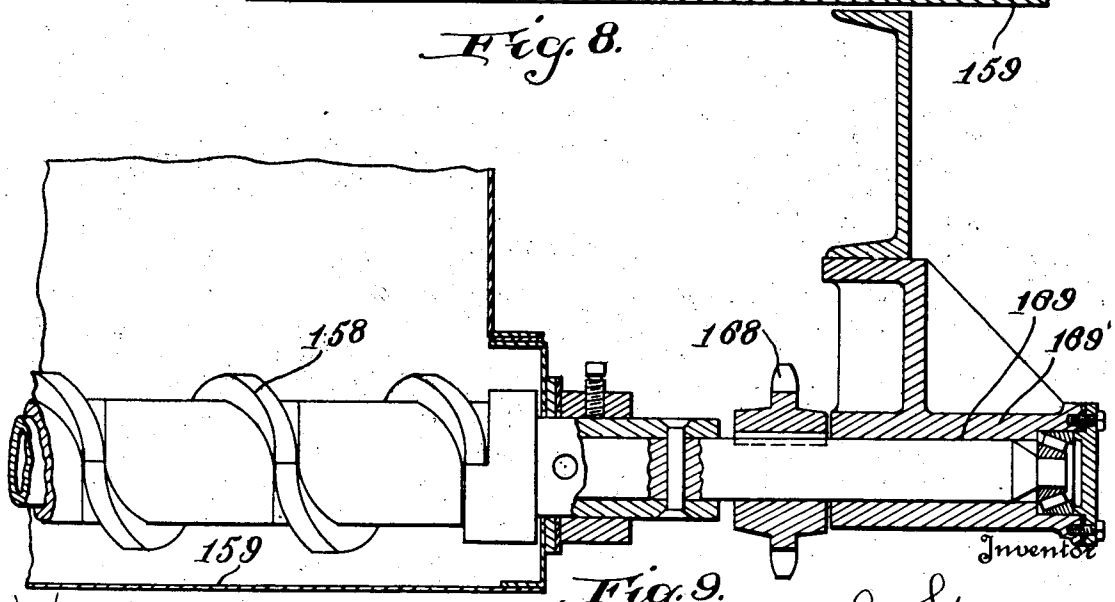

Fig. 9.

Witnesses

Foster J. Hull.
Inventor

By

Attorney

May 21, 1929. F. J. HULL 1,713,965

SAND BLAST TABLE

Filed July 14, 1927 8 Sheets-Sheet 8

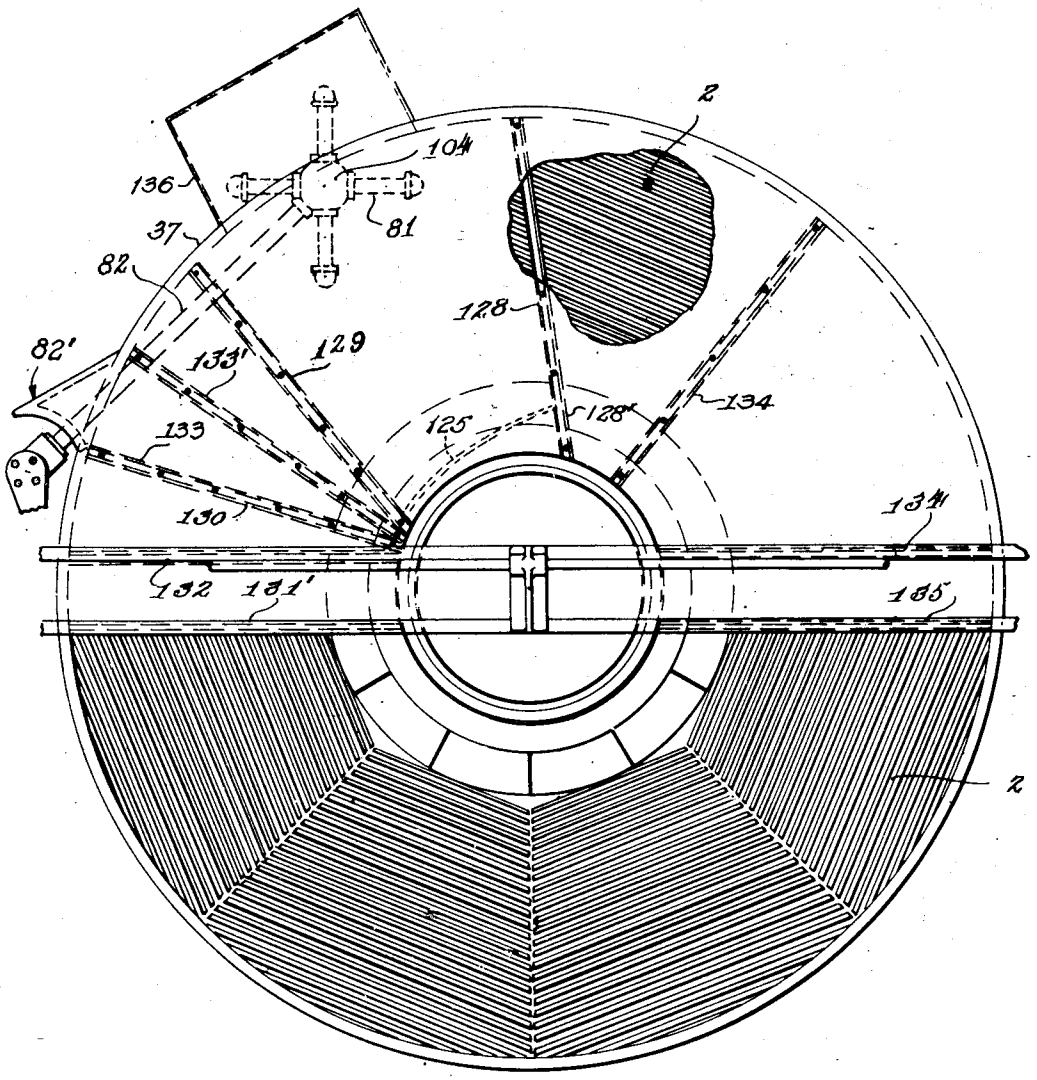

Fig. 11.

Witnesses
Porter H. Flautt.

Inventor
Foster J. Hull

By Edwin Hannels

Attorney

Patented May 21, 1929. 1,713,965

UNITED STATES PATENT OFFICE.

FOSTER J. HULL, OF HAGERSTOWN, MARYLAND, ASSIGNOR TO PANGBORN CORPORATION, OF HAGERSTOWN, MARYLAND, A CORPORATION OF MARYLAND.

SAND-BLAST TABLE.

Application filed July 14, 1927. Serial No. 205,679.

In accordance with the prevailing practice, large castings or other articles to be cleaned or abraded by means of granular abrasive projected against the surfaces to be treated in the form of a blast, are placed on a slow moving rotary table which is partly exposed to provide for the placing of the castings or other articles on the table prior to treatment and their removal therefrom after treatment. The remainder of the table provides a blast chamber enclosed by means of a suitable housing and a series of curtains which permit the castings to pass and check the abrasive.

The table proper which supports the castings or articles being abraded, is in the form of a grate or grating which prevents accumulation of the abrasive, which passes freely through the grating dropping into the pan which is of annular form corresponding to the table, underlying the entire table.

In the operation of the machine of the invention the abrasive and waste accumulated in the pan are removed continuously throughout the operation of the machine and for this purpose a new mechanism has been devised which permits the machine to rest on the floor without special foundation and without excavation and with but a slight elevation of the table above the floor, which is obtained by supporting the machine on heavy beams, preferably channels or I beams arranged in the form of cross ways supporting the center bearing of the table.

The bulk of the abrasive is released and dropped in the blast chamber and immediately beneath this chamber is a hopper, at the bottom of which is a trough and a screw conveyor or other suitable conveyor leading to the base of the elevator of the reclaiming apparatus, which is of any suitable type not specifically illustrated.

A considerable portion of the abrasive is released when the castings or other articles being abraded are inverted or removed from the table, just when they emerge from the enclosure.

To assist in the collection and removal of the abrasive the rotary portion of the table is provided with sweeps which are inclined backwardly, i. e., contrary to the direction of rotation and inwardly to reduce the radius of the path of the abrasive and hence the distance which it travels and the friction and the load on the machine, and to further reduce the distance which the accumulated abrasive must travel from the point of removal or turning the castings a second hopper or trough and conveyor is provided underlying the pan just beyond the point of removal or turning of the castings. The conveyors preferably converge. The last mentioned conveyor preferably delivers to the hopper, or more properly to the first mentioned conveyor, and trough immediately beneath the hopper. By accumulating the abrasive at this point and returning it, the traverse of abrasive from this point half way around the pan is avoided and a consequent excessive abrasion of the pan, friction and loss of power by carrying the weight of the abrasive are eliminated.

The abrasive stream or blast is directed at the castings or other articles treated by means of nozzles of which, in the form of machine illustrated there are several; the number being variable to suit the designer and the necessities of the situation. These nozzles are supported on a single head and turned at various angles to spray the entire radial cross section of the load as it passes. The nozzles which are directed in a general way downwardly at various angles, as aforesaid, are moved back and forth across the chamber in the general direction of the radius of the table from which the path departs to a slight degree on account of the curvature of the arc on which the nozzles are most conveniently moved.

It will be noted in this connection that the width of the table in the direction of its radius being considerable, there is a corresponding difference of speed between the rate of travel of the articles at the outer circumference and the corresponding speed or rate of travel of the articles near the inner circumference. To provide for equal treatment as to the portions of castings or other articles in the various positions, i. e., at the various radii of the table, the speed of the traverse of nozzle at the different radii of the table is corre-

spondingly varied. In other words, it moves with a slow motion through the outer circumference, accelerates as it moves toward the inner circumference and its speed is again retarded to slow motion as it leaves the inner circumference and moves outwardly. To produce this result the nozzle is actuated by means of a cam and cam arm, the cam being in the present instance formed or plotted to give the desired motion and variation of speed.

Reference has been made to the center support or pedestal. This supports two sets of anti-friction bearings both sets being, in the form shown, of the ball type. Surrounding and enclosing the pedestal and engaging the said bearings is a bearing hub member on which are mounted heavy radial supporting arms encircled at their ends by a heavy ring carrying a heavy spur gear formed in sections, by which the table is driven. The table proper, i. e., the annular grid is supported by means, shown as I beams, overlying the rotary structure and extends outwardly from the ends of the beams being encircled by a suitable plate, ring or rim. The table or grid is of annular form and extends from or substantially from the inner to the outer of said rings or rims. The center of this annular table is occupied by a rotary dome and substantially half the table is enclosed by an arcuate casing which is closed at the top inwardly to the turret.

The main objects of the invention, together with the main features of the structure, have been thus outlined. These features and improvements will be more fully described in connection with the accompanying drawings.

I have illustrated a machine embodying the various features of the invention in the preferred form.

In the drawings:

Figure 1 is a perspective view of the machine looking at it from the front, the position of the operator who turns and removes the castings being at the right in said figure.

Figure 2 is a top plan view of the machine, certain of the underlying parts being shown in dotted lines.

Figure 3 is a central radial section on the line 3—3 of Figure 2, a portion of the figure being broken away to reduce the radius and include the important features of the entire half machine in the drawing.

Figure 4 is an interior view of the blasting chamber looking inwardly substantially in a radial direction, the view being in perspective.

Figure 5 is a fragmentary elevation looking at the machine in the direction of the arrow 5, Figure 2, the nozzle arm being swung outwardly to an abnormal position in front of the tank and broken away intermediately for purposes of illustration.

Figure 6 is a section on the line 6—6 of Figure 2, broken away at the left for convenience of illustration.

Figure 7 is continuous with Figure 6, the broken line at the right of Figure 7 corresponding to the broken line at the left in Figure 6.

Figures 8 and 9 are section on the line 8—8 of Figure 6, illustrating the main or lower conveyor screw, bearings therefor, and the manner of driving the same. Figure 8 shows the left hand end of the conveyor screw and the bearing and sprocket at that end. Figure 9 shows the right hand end of the conveyor and screw and the sprocket and bearing at that end.

Figure 10 is an elevation showing the star wheel valve body, the star wheel and the means on the rotary turret for rotating the same.

Figure 11 is a top plan view illustrating the position of the curtains enclosing the blasting or spraying chamber, other features being omitted to avoid confusion.

Referring to the drawings by numerals, each of which is used to indicate the same or similar parts in the different figures, the machine as shown comprises the table 1, the work supporting element of which is in the form of grating or grid 2 of annular shape, i. e., flat circular, the center being occupied by a turret to be described. This grating or grid which is provided with short under-frame members 3′ is supported on radial or substantially radial beams 3, preferably I beams, which are in turn supported on and by a central hub member 4 which rotates on a central pedestal 5 supported on a suitable base 6. The pedestal has rotary and thrust bearings 7 at the top and 8 at the bottom. The I beams 3 are further supported from beneath on the hub 4 by means of an under frame as hereinafter described. This frame comprises short arms 12 which are shown as radially placed and secured to the hub each by means of a pin 14. The pin 14 is seated in a projection 15 at the inner end of the arm. All the pins are vertically placed and enter vertical holes 16 in the hub. The arms are of extended vertical dimension at their inner ends and the lower portions of these ends bear against the bottom of the hub at 17, whereby the short arms 12 are supported on the hub in radial position.

The arms 12 are connected at their outer ends by a circular band 18 to the top portion of which is secured a circular angle iron 19 carrying a horizontal circular plate 20 which extends outwardly therefrom. Beneath the outer edge of this plate is secured a circumferentially extending angle iron 21 to which is secured a depending rubber flap 22 which contacts and wipes the inner wall 24 of the annular pan 25 beneath the table, here-

inafter described, forming a seal between the rotary portion or table and the pan which is a portion of the stationary housing.

The upper arms, shown as I beams 3, rest on the hub 4 at the center and extend outwardly, resting intermediately on the plate ring 20, and overlying the plate 20 are the wear plates 26 in the form of series of arcuate sections, one between each pair of adjacent I beams 3 and following the circular outline of the inner circumference of the pan being spaced above the same, the space between the lower outer edges of the wear plates and the inner wall 24 of the pan being closed by curtain 22 as described. The wear plates 26 are inclined inwardly and upwardly to the base of the cone of the turret, to be described.

The center portion or turret of the rotary table, as shown at 28, comprises a frusto conical base or bottom portion 29 and an upper short cylindrical portion 30 secured to the upper end edge of the frusto conical member, the entire structure being formed of thin sheet metal. The frusto conical member 29 is seated at its bottom edge in angle iron 31 encircling the bottom edge of said member and positioned by upright segmental plate 27 secured to the inner upright wall of the triangular wear plate 26 said angle 31 being secured to the radial beams 3 on which it rests. This angle 31 supports the member 29 from the outside projecting above the I beams 3. Circular angle iron 32 on top of the I beams and secured thereto supports member 29 at the bottom on the inside.

The cavity within the channel thus formed at the bottom of the frusto conical member 29 is closed and protected by means of wear plate 34 secured to the outer surface of the plate 27 near the top and inclined upwardly and inwardly toward the vertical axis of the machine, resting at its top edge at 35 against the outer surface of the frusto conical member 29.

The annular pan 25 is located beneath the table, preferably extending entirely around the same, as aforesaid, the width being sufficient to cause it to underlie the entire area between the outer edge of the lower wear plate 26 and the outer edge of the table proper. The housing, which is semi-circular or semi-annular in form, comprises an upright circular or cylindrical wall 37 extending upwardly from the outer edge of the pan 25 with which it is integral. The wall 37 is secured at its top edge at 38 to an annular roof or cover 39. The roof 39 and the wall 37 enclose only the rear part of the table as shown in Figures 1, 2 and 11, the open portion nearest the observer in Figure 1 being regarded as the front where the operator stands. The wall 37 is removed or omitted at the front, the height of the plate being reduced so that it merely forms the side 25′ of the pan 25, as shown in Figure 1. The pan and wall are part of the rigid stationary structure supported on the base 6. The exact construction of this base and manner of supporting the pan otherwise than as shown forms no part of the invention. The said top or cover has a central aperture 40 encircling the upper cylindrical portion 30 of the center cone 28. The opening 40 about the cylindrical portion 30 of the center cone is closed by means of a rubber packing strip or curtain 41 secured to a Z bar, or other suitable member 42 which may be composed of two angles. This member encircles the top of the cylindrical member 30 and contacts a similar member referred to as Z bar 43 which is secured to the lower surface of the inner edge of the cover or roof 39 where it encircles the opening 40.

Previous reference has been made to the sweeps or scrapers by which the abrasive is carried along the pan in the direction of rotation and delivered to the conveyors by which it is taken back to the reclaiming apparatus. These sweeps are secured to the radial top bars or I beams 3 and inclined backwardly i. e., oppositely to the direction of rotation from the ends toward the center of each sweep so that there is a tendency to carry the abrasive which is picked up near the outer edge of the table, inwardly to a shorter radius to reduce the distance which it must travel and hence the speed, friction and power expended in moving the abrasive. These sweeps, indicated by reference character 46, are best shown in the plan of the frame of the machine, Figure 2.

The sweeps are shown in the form of metal straps or bands which extend generally in a radial direction depending from the table downwardly into the pan, which they clear by about one-half inch. These sweeps are preferably pocketed, the outer and inner ends traveling ahead of the center, i. e., a V structure moving with the apex last, thereby carrying the collected abrasive from the outer edge to a path of less radius and slower movement reducing the power consumption and wear on the table parts, pan and other mechanism. In accordance with the details shown the sweeps 46 are secured to the table frame in any suitable manner as by means of angles 47′ secured to the sweeps at their ends and to the radial I beams 3, particularly the bottom flanges thereof, the ends of the sweeps at 47 and 48 being shown as turned forwardly.

The table is operated, in the form shown, by means of an electric motor 50 mounted at the top of the machine on a suitable frame composed of uprights 51, 51′ and horizontal members 52, 52′, the exact construction being immaterial. The motor shaft 53 is provided with a worm 54 mounted thereon and meshing with worm wheel 55, enclosed with worm 54 in a casing 55′, mounted on and se-

cured to a longitudinal drive shaft 56 which extends across the entire width of the machine, being mounted in bearings 57 on said frame. This shaft carries at the end at the extreme right in Figures 1, 2 and 3, a pulley 58 which drives a belt 59 engaging a pulley 60 at the bottom of the frame, which pulley is mounted on a shaft 61 having secured thereto a sprocket 62 which drives by means of a chain 63 a second sprocket 64 mounted on a shaft 65 and provided with a worm 66 which meshes with a worm wheel 67 mounted on a shaft 68 having suitable bearings in the worm wheel casing 69, which casing also encloses the worm 66. The worm wheel shaft 68 carries at its upper end a spur pinion 70 which meshes with spur gear 71 mounted on and secured to the ring plate or tire 18 which encircles the ends of the short arms 12 of the table under-frame.

In this way the table is rotated whenever the motor is in operation, the speed of rotation being extremely slow so that the castings, or articles to be cleaned or abraded, are placed on the machine, turned and taken off, one man being sufficient to operate each table, the castings being thus held within range of the blast for a period sufficient to clean them thoroughly.

The longitudinal or horizontal shaft 56 which is described as driven by worm gearing from the motor 50, the exact nature of the drive being immaterial, is in turn also provided, in addition to the connections already described, with a beveled pinion 75 at its end opposite to the pulley 58, which pinion meshes with a ring gear 76 which carries, in the form of the invention shown, the nozzle actuating cam 77 having a cam path 78 of variable radius to produce the variable speed traverse of the nozzles, as hereinafter described.

The nozzles which, in the form of the invention shown, are four in number, the exact number being immaterial, are indicated by reference character 80, these four nozzles being mounted on a single head 81 carried by a swinging blast pipe arm 82 which, in the form of the invention shown, serves also as the pipe by which the blast is led to the nozzles. This sand blast pipe arm 82 is supported at its inner end by means of a yoke 83 having at one side a depending arm 84 carrying at its depending end a split collar 85 which encircles and is clamped about the pipe arm. The inner end of the pipe arm is provided with a flange 86 or is otherwise secured to the horizontal arm of a cross fitting or T 87. The swinging blast pipe or arm 82 is fed by a vertical pipe shaft 88 on which the T 87 is mounted.

The T or cross fitting 87 also carries a shaft member 89 which may be solid or hollow, being continuous with the upright pipe 88. Both the upright blast pipe shaft 88 and the shaft 89, as well as blast arm 82, are secured within the cross fitting or T, the fourth arm of the cross being closed as hereinafter described. The pipe 88 is mounted in a stationary bearing 90 beneath the yoke and the shaft 89 at its upper end extends upwardly through a stationary bearing 91 and the shaft 89 carries integral therewith at its upper end beyond the bearing, a plate 92. The cam follower arm 93 is adjustably secured to the shaft 89, the same being in the nature of a radial arm and it is adjusted relatively to plate 92. The adjustment is accomplished by swinging about the shaft 89 by means of screws 95 seated in lugs 96 on the plate and engaging a depending lug 97 on the arm at the rear of the shaft.

The shaft 88 is rocked and the nozzle arm oscillated by engagement of a follower 93′ on the end of the arm 93 with the path 78 of the cam 77, which follower enters said path from beneath, the path being a groove in the bottom of the cam member 77.

The T 87 is secured to the yoke by means of flanges 99 on the fitting and 100 on the yoke, fastened together in any suitable manner, not shown, the said flanges being in direct alignment with the pipe arm 82 and the shaft 89 is secured to the fitting by means of a flange 102 on the shaft and 103 on the fitting or T. Flange 101 at the bottom of the cross fitting rests on the bearing 90.

The horizontal pipe arm 82 carries at its swinging end a T 104, one end of the cross arm of the T being connected to the pipe in any suitable manner, the other end being plugged at 105. The center arm 106 of the T is turned downwardly and is connected to the nozzle head or spray head 81 which, in the form shown, carries 4 downwardly converging sand blast nozzles 80.

From examination of the plan view, Figure 2, the operation of the nozzle arm and nozzles will be easily understood. The cam 77 being driven from the motor 50 which runs the table, the swinging of the nozzles takes place simultaneously with the rotation of the table, the nozzles being moved along an arc which, except for the slight curvature thereof, is substantially co-incident with a radius of the table and, as already pointed out, to compensate for the difference in speed of the portions of the table of and at different radii the nozzles are preferably moved at a varying speed which increases toward the center where the table and castings thereon are moved at a comparatively slow rate, and decreases toward the outside where the speed of the castings increases, so that the speed of treatment or relative speed of the nozzle and castings is substantially equalized.

The cam path 78 is, therefore, shaped in accordance with the well known practice to give this effect.

The upright pipe 88 feeding the blast pipe

arm 82 is connected at its lower end to a stationary T 110 having its center arm 111 turned upwardly to receive the lower end of the pipe. To prevent leakage the stationary T and oscillating pipe are connected by means of a packing gland 112 consisting of two flanged members 114 and 115, the latter secured to the flange 116 of the T. The members 114, 115, are provided with telescoping portions enclosing the end of the pipe 88 and the upper of the telescoping portions 117 contains soft packing 118 surrounding the pipe. The flanges 114 and 115 are drawn together by bolts 119 or in any suitable manner.

One of the horizontal arms of the T is closed in any suitable manner at 120 and the other arm is connected to a pipe 121 leading to an abrasive mixing valve 123, whereby the abrasive is mixed with air under pressure, the same being connected to a sand blast tank 122.

Figure 4 shows an internal view of the sand blast chamber looking toward the center of the machine. The walls of the chamber comprise the top wall or roof 39 of the stationary casing, the grid or table 2 serving as the bottom wall or floor, the inside wall toward the center of the machine being an upright arcuate member 125 connected to the top wall or roof by means of an angle 126. The outside wall is formed by the outside wall 37 of the outer casing, not shown in this figure. The machine shown has a vestibule 136 which forms an extension of the sand blast chamber to provide for the extreme outward swing of the nozzle, as shown in Figures 2 and 11.

The blasting chamber is also enclosed by curtains 128 and 129 at the forward and rear sides respectively, in the direction of rotation which is normally right handed, the said curtains being, in the form of the invention shown, composed of depending strips of heavy fabric, as canvas and rubber, secured at the top to wooden strips 130 which are, in turn, except as to the strip 130 supporting the curtain 129 secured to the top wall 39. As shown, there is a curtain secured to each side of the strip 130 so that each set of curtains is double and the curtains are held in position by overlying strips, preferably of wood, 131.

Figure 11 shows a top plan of the curtains in the preferred form, there being in addition to the curtains 128 and 129 on each side of the chamber other curtains arranged substantially in the direction of the radii or parallel thereto, completing the enclosure by providing locks which perfect the operation of stopping and precipitating the abrasive, the curtains being so arranged that whenever one is raised by the passage of the castings or articles being treated, one or more other curtains remaining in dependent position, form a complete closure of the chamber. The raising of the curtains permits the entrance of castings into the chamber and their exit therefrom, and at the same time the curtains remaining undisturbed maintain an efficient closure. The preferred arrangement of these curtains is clearly shown in the diagrammatic figure, No. 11, referred to, the additional curtains being numbered beginning at the left and going in the direction of right handed rotation, the outside pair of curtains being numbered 131′. The next curtain parallel thereto is 132. The next curtain substantially radial is 133. The next is 133′ and the next curtain deflected slightly from the radial in the direction of the chamber is 129. This curtain encloses the chamber on one side, as aforesaid, and its upper edge is spaced downwardly from the top wall 39, as shown, to admit blast arm pipe 82. In this instance the strip 130 which carries the curtain 129 is supported at its ends, on the member 25 at one end and on the outer wall 37 at the other end. It may be secured in any suitable and convenient manner. The next curtain on the opposite side of the chamber is 128, already described. The next curtain on the right side of this is indicated by reference character 134. The next curtain in the same direction of rotation is 134′. This curtain is aligned with that numbered 132. The next curtain parallel to 134 and substantially in line with 131′ is 135. This is the last curtain, where the castings make their exit from the enclosure. Each curtain is in fact a pair of parallel curtains, as 128 and 128′, one on each side of wooden strip 130, Figure 4.

The illustration, Figure 2, also includes an arcuate guide and support 140 for the horizontal pipe arm 82 and a follower member or shoe 141 on the pipe to engage said support. Fluid pressure cushions or bumpers 142, 143, are also shown. These engage the pipe at each end of its traverse, preventing shocks and injury to the pipe at the end of the swing and preventing contact with the casing. As shown, the shock absorbers consist each of a fluid pressure cylinder 144 containing pistons 145 having piston rods 146 carrying at their ends bumpers or snubbers 147 which are in the path of the horizontal pipe arm 82, the pipe being protected at this point by a sleeve or shoe 148. The cylinders 144 are carried on pairs of angle irons 149 secured to the ceiling or top wall 39. Each of the bumpers is, as shown, enclosed in a casing 150 which protects it from the abrasive and other grit. The arm 82 enters the enclosure through the wall 37 by way of a projecting portion 82′, Figure 2, which has a slightly enlarged aperture to provide for the swing of the arm which is very slight at this point which is quite near its center of oscillation.

A feature of the invention, as aforesaid, resides in the means for collecting the used abrasive to be returned to the reclaiming mechanism, not shown, reducing the traverse of the abrasive, hence the friction and

loss of power, to the minimum. The collecting means in the form of the invention shown comprises, in addition to the sweeps 46, already described, the hopper 155 partly beneath the blasting chamber. This hopper may extend beyond the chamber in the direction of rotation, i. e., right handed. The hopper, see Figures 6 and 7, is of downwardly tapering cross section, the inclined sides 156 converging toward a trough 159 at the bottom, in which is a conveyor screw 158. It will be noted that the inclined plates 156 are secured to the bottom of the pan 25 which is cut away to form the top opening 157 of the hopper.

A comparatively large percentage of the abrasive is passed through the grid or table 2 within and immediately beyond the blast chamber and dropped directly into the hopper, but a considerable amount of the abrasive is carried around on the castings or other articles being cleaned, being finally released and dropped when the casings are turned or removed by the operator, when they emerge from the enclosure or casing through the curtain 135. Hence the bulk of the portion of the abrasive which is not dropped directly into the hopper 155 is dropped into the pan 25 beyond the curtain 135.

The sweepers or scrapers 46 would, in the absence of further means to return the abrasive, carry it around the pan for some two-thirds of its circumference, finally dropping it in the hopper. This would result in an excess of friction, consuming a considerable amount of power and wearing the pan and other table parts to an unnecessary degree. To avoid this loss of power and unnecessary wear, in accordance with the present invention, a second or branch conveyor has been provided. This conveyor is shown in the form of a screw 160 located in a trough 161, which trough enters the hopper 155 as a pipe 161′ above the previously described trough 159. The trough 161 underlies a corresponding slot 162 in the pan 25, the metal of the trough being suitably joined to the metal of the pan.

The slot 162 with the trough 161 and the conveyor 160 underlie and receive the abrasive and other material dropped into the pan on a line at a slight angle to the radius of the pan, the angle being capable of considerable variation and the line of the trough, etc., being, as shown, spaced somewhat less than ninety degrees beyond the curtain 135, the area between said members being chosen as a convenient one within which the articles being treated may be turned or removed, providing for the complete release of the abrasive before it reaches the line of the trough. Under these circumstances the abrasive removed from this area by the sweeps or drags is dropped into the trough 161 and carried by the conveyor 160 to the hopper 155 where it passes with the abrasive dropped into the hopper from the blasting chamber into the trough 159, substantially the entire quantity of abrasive discharge by the nozzles being delivered to the hopper and discharged from the machine by the conveyor 158 being in the form of the machine shown delivered by said conveyor to the base of the elevator 163 by which it is carried to the reclaiming apparatus 164, all of which members are indicated only in a general way.

In accordance with the construction shown, the conveyors 158 and 160 are driven from the motor 50. They may be driven in any suitable manner. In accordance with the construction shown, they are actuated by means of chains 165 and 166 respectively, the chain 165 being driven from and by a sprocket 167 on the shaft 61 driven by a pulley 60 as previously described, the chain 165 passing over and driving a sprocket 168 on the shaft 169 of the screw conveyor 158. The chain 166 is driven by a sprocket 170 also on the shaft 61. The chain 166 drives a sprocket 171 secured to shaft 172 mounted in suitable bearings 173, 174, in the machine frame. This shaft 172 carries a beveled gear 175 which meshes with the beveled gear 176 on the shaft 177 of the second conveyor screw 160, the shaft 177 being supported and guided in a suitable bearing 178 on the machine frame. Conveyor shaft 169 is mounted in suitable bearings 169′ in the frame and carries at its outer end sprocket 169″ which drives the elevator.

In Figure 10 I have shown pins 180 projecting radially from the angle iron ring 40 at the top from suitable clamps 181 secured to the angle ring 40 at the top of the central conical member 28. These pins engage and operate star wheel 182 mounted on a suitable bracket 183 secured to the roof or top 39 of the stationary casing at the rear. The valve 184 is mounted on the bracket and connected by pipes 186 with the air pressure and 187 to the machine for applying pressure to the abrasive. The clamp 181, as shown, is in the form of a U shaped member through one arm of which U is passed a set screw 188, the U shaped clamp being in operative position placed astride of the upright edge of the angle iron 40. The screw 188 is tightened in any desired position of adjustment. The pins 180 are carried each in a collar 189 having its axis placed radially of the casing, the pin being held in the collar by means of a set screw 190. This valve controls the operation of the sand blast machine for applying pressure to the abrasive, the same being thus supplied to the nozzles of this machine.

The machine is shown as supported on a base composed of channel irons 195 resting on the floor.

The operation of the machine has been fully described in connection with the description of its construction.

I have thus described specifically and in detail a machine embodying my invention in the preferred form in order that the construction and manner of operating and applying the same may be clearly understood, however, the specific terms herein are used descriptively rather than in a limiting sense, the scope of the invention being defined in the claims.

What I claim as new and desire to secure by Letters Patent is:

1. In a sand blast machine, a rotary table comprising a grid, a sand blast chamber overlying the table, means for providing a sand blast in said chamber, a pan under said table, means beneath said pan for removing the abrasive and means on the table for sweeping the abrasive from the points of deposit to said removing means comprising sweeps inclined oppositely to the direction of rotation and inwardly from the outer circumference reducing the radius of travel of the abrasive.

2. In a sand blast machine, a rotary table comprising a grid and a support, a sand blast chamber overlying the table, means for providing a sand blast in said chamber, a pan under said table, a plurality of intersecting conveyors beneath said pan for removing the abrasive, means on the table for sweeping the abrasive from the points of deposit toward said conveyors comprising sweeps rotating with said table.

3. A sand blast apparatus comprising a rotary table, a spray nozzle, an enclosure for said nozzle overlying the table, a laterally swinging pipe arm on which the nozzle is mounted, means for swinging the arm spaced outwardly from the center about which the arm swings toward and from the center of the table, a guide and support for the arm spaced outwardly from the center about which the arm swings and cushioning bumpers engaging and checking the arm at each end of the swing.

4. A sand blast apparatus comprising a rotary table, a spray nozzle, an enclosure for said nozzle overlying the table, a laterally swinging pipe arm on which the nozzle is mounted, means for swinging the arm toward and from the center of the table and cushioning bumpers engaging and checking the arm at each end of the swing.

5. A sand blast machine comprising a moving table, a blasting chamber thereon, a nozzle in the chamber, an upright pipe shaft and a singing pipe arm carrying and feeding the nozzle, means for supporting the swinging pipe arm comprising a yoke, a bearing to support the upright pipe shaft and yoke, the yoke having holding means for the swinging arm, spaced outwardly from the upright shaft, and a fitting within the yoke connecting the upright pipe shaft to the horizontal arm.

6. A sand blast machine comprising a moving table, a blasting chamber thereon, a nozzle in the chamber, a pipe shaft and a swinging pipe arm carrying and feeding the nozzle, means for supporting the swinging pipe arm comprising a yoke supported on the shaft, the yoke having supporting means for the swinging arm, a bearing supporting the yoke, and a fitting within the yoke connecting the upright pipe shaft to the horizontal arm, said fitting also including a top connection in line with the pipe shaft, a shaft secured therein and extending upwardly through the yoke, a cam arm secured to the top of the shaft, a follower on the arm and a cam engaging the follower and actuating the shaft to swing the arm across the chamber in a substantially radial direction.

7. A sand blast machine comprising a rotary table, a blasting chamber thereon, a nozzle in the chamber, an upright pipe shaft and a swinging pipe arm carrying and feeding the nozzle, means for supporting the swinging pipe arm comprising a yoke having a support for the swinging arm, bearings supporting the yoke and the upright shaft, a fitting in said yoke having a connection to the pipe arm connected below to the upright pipe shaft and having a connection to the yoke opposite the arm, an upright shaft also connected to the fitting in line with the upright shaft and extending upwardly through the yoke and top bearing and means for actuating said shaft from above to swing the pipe arm.

8. A sand blast machine comprising a moving table, a blasting chamber thereon, a nozzle in the chamber, an upright pipe shaft and a swinging pipe arm carrying and feeding the nozzle, means for supporting the swinging pipe arm comprising a yoke having a support for the swinging arm, spaced, stationary bearings supporting the yoke and shaft and a fitting within the yoke connecting the upright pipe shaft to the swinging arm, the upright shaft having at its lower end a packing gland, a fitting to which said upright pipe shaft is connected by said packing gland and a stationary pipe connected to said fitting and at its opposite end to a sand blast pressure apparatus.

9. In a sand blast machine, the combination of a central pedestal having upper and lower bearings, a base, a hub enclosing the pedestal and having bearing members to engage said upper and lower bearings, supporting arms radiating from the hub, a band connecting the arms at their outer ends, a gear secured to said band, driving means including a toothed pinion engaging said gear, upper frame members overlying said hub and supporting arms and extending outwardly beyond the same in a radial direction, a band connecting the outer portions of said frame mem-

bers, a grid overlying the outer portion of the frame members and supported thereon and, of an annular form extending about the entire periphery of the structure, a turret occupying the center of the frame inside the grid, a stationary annular pan underlying the grid, means for sweeping the used abrasive along the pan, a receptacle beneath the pan into which the abrasive is swept and conveyor means leading from said receptacle, said receptacle and conveyor being above the floor.

Signed by me at Hagerstown, Maryland, this 28th day of June, 1927.

FOSTER J. HULL.