(12) INTERNATIONAL APPLICATION PUBLISHED UNDER THE PATENT COOPERATION TREATY (PCT)

(19) World Intellectual Property Organization
International Bureau

(43) International Publication Date
29 July 2004 (29.07.2004)

PCT

(10) International Publication Number
WO 2004/064326 A1

(51) International Patent Classification[7]: H04L 12/28, 29/06, 12/24, 1/18

(21) International Application Number:
PCT/EP2003/014932

(22) International Filing Date:
29 December 2003 (29.12.2003)

(25) Filing Language: English

(26) Publication Language: English

(30) Priority Data:
103 01 222.2 15 January 2003 (15.01.2003) DE

(71) Applicant *(for all designated States except US)*: **THOMSON LICENSING S.A.** [FR/FR]; 46 Quai A. Le Gallo, 92100 Boulogne - Billancourt (FR).

(72) Inventor; and
(75) Inventor/Applicant *(for US only)*: **HÜTTER, Ingo** [DE/DE]; Karl-Simrock-Weg 15, 30982 Pattensen (DE).

(74) Agent: **SCHÄFERJOHANN, Volker**; Deutsche Thomson-Brandt GmbH, European Patent Operations, Karl-Wiechert-Allee 74, 30625 Hannover (DE).

(81) Designated States *(national)*: AE, AG, AL, AM, AT, AU, AZ, BA, BB, BG, BR, BW, BY, BZ, CA, CH, CN, CO, CR, CU, CZ, DK, DM, DZ, EC, EE, EG, ES, FI, GB, GD, GE, GH, GM, HR, HU, ID, IL, IN, IS, JP, KE, KG, KP, KR, KZ, LC, LK, LR, LS, LT, LU, LV, MA, MD, MG, MK, MN, MW, MX, MZ, NI, NO, NZ, OM, PG, PH, PL, PT, RO, RU, SC, SD, SE, SG, SK, SL, SY, TJ, TM, TN, TR, TT, TZ, UA, UG, US, UZ, VC, VN, YU, ZA, ZM, ZW.

(84) Designated States *(regional)*: ARIPO patent (BW, GH, GM, KE, LS, MW, MZ, SD, SL, SZ, TZ, UG, ZM, ZW), Eurasian patent (AM, AZ, BY, KG, KZ, MD, RU, TJ, TM), European patent (AT, BE, BG, CH, CY, CZ, DE, DK, EE, ES, FI, FR, GB, GR, HU, IE, IT, LU, MC, NL, PT, RO, SE, SI, SK, TR), OAPI patent (BF, BJ, CF, CG, CI, CM, GA, GN, GQ, GW, ML, MR, NE, SN, TD, TG).

Published:
— *with international search report*
— *before the expiration of the time limit for amending the claims and to be republished in the event of receipt of amendments*

For two-letter codes and other abbreviations, refer to the "Guidance Notes on Codes and Abbreviations" appearing at the beginning of each regular issue of the PCT Gazette.

(54) Title: METHOD FOR PROCESSING OF MESSAGES WHICH ARE TO BE TRANSMITTED VIA A TRANSMISSION MEDIUM IN A NETWORK OF DISTRIBUTED STATIONS, AS WELL AS A NETWORK STATION

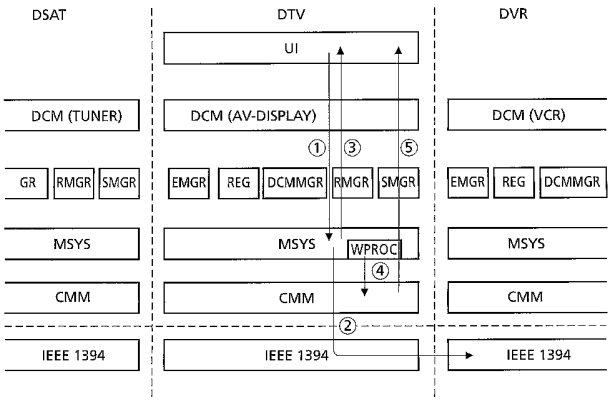

(57) Abstract: The invention relates to a method for processing messages which are to be transmitted via a transmission medium in a network of distributed stations. For example, in a HAVI network, a HAVI message ( ) has to be confirmed within a maximum time -out of 30 seconds when it is sent to another network appliance. Waiting for the se 30 seconds can lead to a considerable decrease in the speed of the station which is initiating the message transmission. According to the invention, the response of the transmitting station is improved in that message transmission (2) is started with a shorter time-out, for example 2 seconds, and, if this time-out has been exceeded, the component (MSYS of DTV) which initiates the message transmission is immediately allowed to carry out (3) further processing again. A waiting process (WPROC) then still runs in the background, however, in a which a check is carried out to determine whether the confirmation message relating to the message transmission still arrives within the 30 seconds time-out. If not, the network subscriber station which does not respond is removed (4) from the list of active HAVI appliances.

WO 2004/064326 A1

Method for processing of messages which are to be transmitted via a transmission medium in a network of distributed stations, as well as a network station.

The invention relates to the technical field of so-called home networks. In this case, in particular, the invention relates to a technique by means of which the availability of a network station can be improved after transmission of a message to an inactive station.

Background of the invention

In the future, entertainment electronic appliances from widely differing manufacturers will be networked with one another both in-house and in the domestic area. A powerful data transmission protocol already exists, in the form of an IEEE 1394 bus protocol. According to this bus protocol, data packets are transmitted serially between the network subscriber stations. The data transmission capacity is in this case 100 Mbit/s or more. Even video and audio data streams can thus be transmitted conveniently in real time via bus connections such as these. The associated bus protocol is specified in IEEE Standard 1394. A separate specification in accordance with IEC Standard 61883 is available for the transmission of audio and video streams (isochronous data transmission). However, only the lower layers (physical layer, data link layer as well as parts of the transaction or network layer) of the OSI/ISO reference model for data communication are specified in IEEE Standard 1394. The additional IEC Standard 61883 furthermore also specifies the so-called transport layer. The layers above this, namely the session layer, the presentation layer and the application layer, are thus still undefined.

In order to achieve the actual aim of networking of appliances from different manufacturers in the domestic area, a consortium of companies has been set up to

standardize these layers of the OSI reference model that still remain. This work has resulted in the so-called HAVi specification, Version 1.1 of which is now available. The precise title is: Specification of the Home Audio/Video interoperability (HAVi) architecture, Version 1.1, May 15, 2001. A major part of the HAVi specification relates to the standardization of messages for interchanging data. There are also a range of standardized messages which the HAVi appliance have to know and have to be able to use.

Invention

In the course of his development work relating to the implementation of the HAVi specification for entertainment electronic appliances, the inventor found the following problem. In accordance with the HAVi specification, a standardized HAVi message is transmitted to an addressed appliance with a so-called time-out for the response. According to the HAVi specification, an HAVi message must in each case be acknowledged by the appliance which receives the message. In the case of a request message, the acknowledgement first of all immediately follows receipt of the message, and the actual response is then sent after a variable time interval. In order that a station which has sent an HAVi message addressed to a faulty appliance or to an appliance which is no longer in the network does not have to wait indefinitely for the response or the acknowledgement message, the HAVi specification includes a definition that, when an HAVi message is sent, a so-called time-out must be monitored in the appliance which transmits the message. This is, so to speak, the maximum period within which the transmitted HAVi message must at least be acknowledged. In the HAVi specification, the maximum time-out is 30 seconds. If no acknowledgement has been received within 30 seconds after transmission of the message, then the appliance which transmitted the message should

no longer wait for an acknowledgement or the response and is allowed to delete the previously addressed appliance from its list of active HAVi appliances. This list is kept in the local communication media manager for the respective HAVi appliance.

However, this definition of the time-out does not result in an optimum HAVi appliance response. For example, if the operator uses the remote control to send a start command for a video recorder to the TV that is in front of him, then, in accordance with the HAVi specification, the TV will generate an appropriate HAVi message and will transmit this via the home network to the video recorder, which may be located anywhere else in the room or in a different room. If the video recorder were to be malfunctioning, then the TV would have to wait for 30 seconds after transmission of the HAVi message for the start command before it could emit an appropriate error message. The operator would therefore not receive an immediate response to the problem that has occurred and would not know why the previously sent start command had not been carried out. During this time, the operator would be unclear as to whether the problem was in the video recorder or, perhaps, even in the television, since it apparently did not react immediately to the commands which were sent. Even if the operator were not to consider that a fault had occurred, the described scenario would lead to a considerable reduction in the speed of the television.

One possible solution to this problem would be to use a shorter time-out for the transmission of HAVi messages, and, in principle, this is allowed in the HAVi Standard. For example, it would thus be possible to implement a system in which each appliance in the network had to respond within 2 seconds. If the response did not arrive within this time, no further

time would be wasted waiting for the response and the actual application of the requested appliance would be enabled. This reduced time-out would result in the reduction in the operating speed remaining within acceptable limits in the event of defective appliances in the network. Nevertheless, this solution has the disadvantage that this reduced operating speed with a 2 second time-delay remains in existence for as long as the appliance is still included in the network. This is because, in accordance with the HAVi Standard, an appliance may not be removed from the list of active HAVi appliances in the network until it has not sent back any acknowledgement message in response to a request with a time-out of 30 seconds. The specification relating to this in the HAVi Standard is fixed and no other implementation may be carried out with regard to this point since, otherwise, this would result in incompatibility between the HAVi Standard and the respective appliance.

The object of the invention is to improve this already mentioned problematic behavior of a network appliance. Solutions according to the invention are specified in the independent claims 1, 2 as well as 7 and 8. Even in the case of the appliances according to the invention, a shortened time-out of, for example, 2 seconds shall be used for communication with other HAVi appliances. Since, however, it is not clear once this time has elapsed whether, perhaps, a response could still occur (perhaps even after a further 100 ms) or whether the response will not actually arrive within the 30 second time-out as defined by HAVi, the appliance must not be removed from the list of active HAVi appliances until the 2 seconds have passed unsuccessfully.

According to a first solution, the messaging system for the HAVi appliance is modified such that the calling software component is informed, once the time-out (for

example 2 seconds) has passed, that no response has arrived from the addressed appliance. This message results in the calling software component being released so that it is therefore no longer blocked. An identifiable reaction is thus evident to the operator after just 2 seconds. Furthermore, the messaging system shall, however, still wait in the background for the response from the addressed appliance. If this response still arrives before the 30 second limit (this is equivalent to the appliance still being functional but to the requesting appliance simply not having waited for long enough), the messaging system ends the waiting period without any further consequences. If, on the other hand, no response has been received even after 30 seconds, the addressed appliance is then automatically removed from the list of active HAVi appliances by the messaging system.

A second solution according to the invention is based on the idea of developing an additional software component, for example as part of the messaging system, in order to check that the addressed appliances are operating correctly. If the situation described above occurs, in which the addressed appliance in the network has not responded within the short time-out setting of, for example, 2 seconds, this additional component is called. This can be activated automatically by the messaging system. This additional component now sends an activity checking message with the maximum time-out of 30 seconds to the problematic appliance. If no acknowledgement message in response to this request is received within the 30 second time-out, the problematic appliance is once again removed from the list of active HAVi appliances.

Both solutions offer the advantage that the decrease in the speed of the requesting HAVi appliance is restricted to a short acceptable time period. After

this, this HAVi appliance once again operates at full speed, even if the problematic appliance is still included in the network. Furthermore, a defective appliance is, in the end, still removed from the list of active HAVi appliances after 30 seconds and no further requests, which would reduce the speed, can be made to this appliance in the future.

The measures described in the dependent claims allow advantageous developments and improvements.

The measures according to the invention are included in an appropriate form in the independent claims 7 and 8 which relate to a network station according to the invention.

Drawings

The invention will be explained in more detail in the following text with reference to drawings, in which:

Figure 1 shows an example of a simple home network;

Figure 2 shows the display of the network structure on the display of the television in the network shown in Figure 1;

Figure 3 shows the display of a control menu for the video recorder for the display on the television in the network shown in Figure 1;

Figure 4 shows the outputting of an error message on the display on the television as a reaction to the lack of any acknowledgement message after a request to the video recorder;

Figure 5 shows the display of the new network structure after deletion of the video recorder from the list of active network appliances;

Figure 6 shows the interaction between the software components of the TV and video recorder when sending an HAVi message from the TV to the video recorder;

Figure 7 shows the interaction between the software components in the TV when sending an HAVi message to the video recorder, when the video recorder sends back neither an acknowledgement message nor a response, according to a first exemplary embodiment of the invention;

Figure 8 shows the interaction of the software components of a TV when transmitting an HAVi message to the video recorder, when the video recorder sends back neither the acknowledgement message nor the response according to a second exemplary embodiment of the invention.

Exemplary embodiments of the invention

Figure 1 illustrates a very simple home network which comprises three network subscriber stations. The reference symbol DTV denotes a digital television. This is connected firstly to a digital video recorder DVR and secondly to a digital satellite receiver DSAT. A commercially available DVHS appliance is mentioned as an example of a digital video recorder. However, this could just as well be a recorder which is designed for writing to optical discs, or a hard disc recorder. A commercially available DVB satellite receiver is mentioned as an example of a digital satellite receiver. Both appliances are connected to the digital television DTV via separate IEEE 1394 bus cables.

Figure 2 shows how the network structure is displayed on the display of the digital television DTV. This display includes the network structure shown in Figure 1. A display such that in practice corresponds

to a type of main menu for control of appliances in the network. The operator can select one of the displayed appliances by using the cursor control keys on the remote control. The boundary around the illustrated video recorder DVR is intended to indicate that the operator has selected the video recorder with the aid of the cursor control keys. This is indicated on the display by, for example, highlighting the video recorder. Once the OK key on the remote control has been pressed, the display changes and shows a control menu for the selected video recorder. One simple example of a control menu such as this is illustrated in Figure 3. Figure 3 shows only the main functions play, fast forward, fast reverse, stop, recording, pause. The operator can once again use the cursor control keys to select a displayed function, and can call this up using the OK key. In Figure 3, the symbol for the play function has a surround. This is intended to indicate that the operator has selected the replay function, and thus that the video recorder should play the inserted tape.

Figure 4 now shows the reaction to this function call. Specifically, once 2 seconds, for example, has elapsed, the display changes to the display illustrated in Figure 4. This is based on the assumption that the video recorder has actually not sent back any acknowledgement message within the 2 seconds waiting time. The time-out (which is set to 2 seconds) for the HAVi message which transmits the play command has thus been exceeded, which leads to the display jumping back to the main menu, illustrating the network structure, and at the same time with a fault message being output for the video recorder. In the display of the network structure shown in Figure 4, the symbol for the video recorder DVR is also coarsely shaded, which is intended to indicate that this component has exhibited a problematic response.

Figure 5 then also shows the display on the TV after the complete 30 second HAVi time-out has passed without any acknowledgement or response message being sent back. In this situation, the display then changes to the main menu such that only the television DTV and the satellite receiver DSAT are still displayed in the network structure. This is intended to indicate that the video recorder is no longer included in the active HAVi appliances.

Figure 6 shows the components of the so-called HAVi stack for the appliances in the network shown in Figure 1. In this case, the example is based on the assumption that all of the appliances in the network support level 1 interoperability in accordance with the HAVi Standard. For this purpose, each network appliance is equipped with a so-called embedded DCM (Device Control Module). In the center, Figure 6 shows the components of the TV, while the components of the digital satellite receiver DSAT are shown on the left-hand side, and the software components of the video recorder DVR are shown on the right-hand side.

The DCM for a network appliance in practice forms an interface for controlling the functions of the appliance. The DCM functionalities have already been defined for certain appliance types in the HAVi Standard. These are a tuner DCM, a clock DCM, a camera DCM, an AV disc DCM, an amplifier DCM, a display DCM, an AV display DCM, a modem DCM as well as a web proxy DCM. The digital satellite receiver DSAT therefore has a tuner DCM in accordance with the HAVi Standard. An AV display DCM has been implemented in the digital TV DTV. A VCR-DCM is implemented in the video recorder DVR.

The HAVi Standard distinguishes between various classes of appliances. These are so-called full AV devices (FAV appliances), intermediate AV devices (IAV appliances),

base AV devices (BAV appliances) and legacy AV devices (LAV appliances). Of these appliance classes, only the appliances in the last class, the LAV appliances, are already existing entertainment electronic appliances which, in fact, are not designed to the HAVi Standard. All other appliances are already designed to the HAVi Standard. In this case, the FAV appliances have the greatest functional scope and the widest support for the HAVi Standard. The particular feature of FAV appliances is that they provide a runtime environment for Java byte code. This allows an FAV appliance to load Java byte code from other appliances, and thus to provide an extended capability to control them. Typical examples of FAV appliances are digital TVs, as well as set-top boxes or else PCs.

The class of IAV appliances is characterized by a restricted functional scope and limited resource capabilities. They do not offer a runtime environment for Java byte code and can therefore not be used as controllers for any other desired appliances in the home network. However, they can support predefined functions of specific appliances and can therefore also monitor appliances in the home network to a restricted extent.

The BAV appliances offer even less functional scope and have no HAVi stack. They cannot themselves monitor other appliances in the home network. However [lacuna] have Java byte code, by means of which they can be controlled from an FAV appliance or an IAV appliance.

In the example shown in Figure 6, the digital television DTV is in the form of an FAV appliance, the digital video recorder belongs to the class of IAV appliances, and the digital satellite receiver DSAT is likewise in the form of an IAV appliance. The other software components for the appliances comprising the

digital satellite receiver DSAT and the digital video recorder DVR are only indicated in Figure 6, but match the corresponding software components of the digital TV DTV. The software elements are an event manager EMGR, a registry REG, a DCM manager DCMMGR, a resource manager RMGR, a stream manager SMGR, a messaging system MSYS and a communication media manager CMM. A further component IEEE 1394 is also shown, underneath the software component CMM. However, this should not necessarily be regarded as a software component. This component is intended only to indicate that there may also in fact be an interface for the 1394 bus protocol in each appliance. The IEEE 1394 bus protocol is, however, normally implemented in hardware with the aid of a 1394 physical layer IC and a 1394 data link layer IC. This component is therefore offset from the other software components by a dashed line.

Since the software components which have been mentioned so far are all known from the HAVi Standard, they will be described in the following text only to the extent that is necessary for understanding of the invention. The event manager EMGR is used as an event administration unit. In this case, an event is a change in the state of an appliance or of an object or of the entire home network. The registry REG includes a list of the existing software elements. The DCM manager is responsible for the installation and rectification of DCM code units for FAV and IAV appliances. The DCM manager need not necessarily be present for the purposes of the level 1 interoperability that is implemented here. The resource manager RMGR administers the resources for the respective appliance. The stream manager SMGR is responsible for the real-time AV data transmission between the appliances for an AV connection that has been set up. The messaging system MSYS is responsible for passing on the received messages and the messages to be sent to the respective

appliances. A range of standardized HAVi messages are specified in the HAVi Standard. In this case, communication based on standardized HAVi messages does not just take place between appliances. Standardized HAVi messages are also interchanged internally in an appliance between different objects. Appropriate addresses SEID are allocated to the individual objects for this purpose. The communication media manager CMM, as a software component, supports asynchronous data transmission via the 1394 bus. This also refers to a list of the active HAVi appliances.

A so-called user interface UI is also provided as a further software component for the digital television DTV. This corresponds to an application program in which the screen is configured in accordance with the commands demanded by the operator, but the associated messages are also passed on via the messaging system MSYS to other appliances or to the DCM for that particular appliance.

Figure 6 now shows the typical procedure for a control process for a network appliance via the user interface of the digital television DTV. This assumes that the operator sends a control demand on the remote control while AV data is being transmitted from the video recorder DVR to the display DTV. In the case of a home network, a universal remote control is normally available, by means of which two or more appliances can be controlled. In order to operate the video recorder DVR, the operator then presses the appropriate key VCR on the remote control. The user interface UI for the television DTV will then generate an appropriate message to the messaging system MSYS.

In Figure 6, the transmission of this message to the messaging system MSYS is identified by the mark ①. The messaging system MSYS of the television DTV will then

send a control demand message to the video recorder DVR. This message is then transmitted via the 1394 interface from the television DTV and video recorder DVR to the messaging system MSYS for the video recorder DVR. The corresponding message transmission is identified by the mark ② in Figure 6. Assuming that the video recorder DVR is active, once this control demand message has been received the video recorder DVR first of all immediately transmits back an acknowledgement message to the messaging system MSYS for the television DTV. This response transmission of the acknowledgement message is identified by the mark ③ in Figure 6. Furthermore, the messaging system for the video recorder DVR will then immediately appropriately notify the VCR DCM in the video recorder DVR. In Figure 6, this notification is identified by the mark ④. The VCR DCM will then supply its control functions to the messaging system MSYS for the video recorder DVR which then transmits this control information back to the messaging system MSYS for the television DTV in standardized HAVi messages. The corresponding steps are provided with the time marks ⑤ and ⑥ in Figure 6. Finally, the messaging system MSYS for the television will supply the response to the user interface UI, which produces the associated display elements on the display for the television DTV. This last transmission is identified by the mark ⑦ in Figure 6.

Figure 7 now illustrates the situation in which the operator emits the control command PLAY for the video recorder DVR as shown in Figure 3. The user interface UI converts this control demand to an appropriate message for the messaging system MSYS for the television DTV. The HAVi message which is produced by the messaging system for the television DTV is then transmitted via the IEEE 1394 interface, in step ② to the video recorder, where, however, it is not passed on to the higher software elements because the video

recorder has a malfunction. Since the HAVi message in step ② was sent with a time-out of, for example, 2 seconds, the messaging system MSYS for the television DTV will, according to the invention, notify the user interface once 2 seconds have passed, thus allowing the user interface to at the same time also, however, initiate the outputting of a fault message, as is illustrated in Figure 4. This action is identified by the mark ③. The messaging system MSYS for the television DTV will, however, also start a waiting process in the background, which checks whether the acknowledgement message from the video recorder DVR also arrives within the 30 second time-out. This waiting process, which runs in the background, is identified as WPROC in Figure 7. If the acknowledgement message were still to arrive within the 30 seconds waiting time, the waiting process WPROC would end the wait without starting any further action. However, if the acknowledgement message does not arrive within this time, then the waiting process GPROC ends the waiting period by sending a deletion message to the CMM for the television DTV, by means of which the video recorder DVR is intended to be deleted from the list of active HAVi appliances. This process is identified by the mark ④ in Figure 7. In addition, the CMM will then also inform the user interface UI that the video recorder has been deleted from the list of active HAVi appliances, see the mark ⑤. This can be implemented by the user interface in such a way that a modified display for the network structure appears on the display for the television DTV. For example, the new network structure as shown in Figure 5 may be displayed.

Figure 8 shows the same application as Figure 7, but with the monitoring of the arrival of the acknowledgement message being carried out according to a second exemplary embodiment of the invention. The

messaging system MSYS is once again informed at the mark ① that the play command is intended to be initiated in the video recorder DVR. The transmission of the associated HAVi message to the video recorder DVR is illustrated at the mark ②. Since the video recorder DVR is not active, the acknowledgement message is not transmitted back within the 2 second time-out period that has been set. The messaging system MSYS then, at the mark ③, notifies the user interface UI that there is a fault in the video recorder DVR.

Furthermore, the user interface is released for further processing. Next, the messaging system MSYS produces an activity checking message and sends this to the video recorder DVR whose behavior is problematic, mark ④. In particular, the standardized HAVi message Message::PING is sent to the video recorder DVR as the activity checking message. This transmission takes place with the maximum time-out of 30 seconds as defined in HAVi. If this activity checking message is not acknowledged by the video recover DVR within 30 seconds, then the messaging system MSYS for the television DTV ensures that the entry in the list of active HAVi appliances is deleted in the CMM for the video recorder DVR. This is identified by the mark ⑤ in Figure 8. Finally, the CMM once again notifies the user interface that the video recorder DVR has been deleted from the list of active HAVi appliances in the CMM, for example by means of the CMM Event GoneDevices. The user interface can once again implement this notification as explained with reference to Figure 7.

A wide range of changes and modifications to the described exemplary embodiments are possible and are still regarded as being associated with the invention. For example, the data transmission in the home network need not necessarily be based on the bus protocol for the IEEE 1394 bus. Instead of this, it is possible to

use wire-free networking of the home network appliances. This can be done, for example, using the wire-free transmission methods HIPERLAN/2 or IEEE 802.11b. Other wire-based transmission methods such as Ethernet, power line data bus, ringbus systems, etc can also be used instead of this. In the illustrated exemplary embodiments, the messaging system for the HAVi-FAV appliance, that is to say the digital television, has been modified. However, it would also be possible to modify the messaging system or some other appliance. A digital set-top box or else the digital satellite receiver DSAT may be mentioned as an example. An appliance with a display need not necessarily have the extended messaging system. It is also sufficient for the appliance to have the capability to be connected to a display by means of the extended messaging system.

Patent Claims

1. A method for processing of messages which are to be transmitted via a transmission medium in a network of distributed stations, in which a message is allocated a maximum duration for the response transmission, **characterized by** the following steps:
after transmission of the message, monitoring to determine whether the response arrives within a first specific time, enabling of the component (UI) which initiates the message transmission if the response does not arrive within the first specific time, monitoring in the background to determine whether the response arrives within a second specific time, and removal of the station to which the message was addressed from a list of active network stations if the response does not arrive within the second specific time.

2. A method for processing of messages which are to be transmitted via a transmission medium in a network of distributed stations, in which a message is allocated a maximum duration for the response transmission, **characterized by** the following steps:
after transmission of the message, monitoring to determine whether the response arrives within a first specific time, enabling of the component (UI) which initiates the message transmission if the response does not arrive within the first specific time, transmission of an activity checking message to the network station to which the original message was also sent, monitoring to determine whether the response to the activity checking message arrives within a second specific time, and removal of the station to which the message was addressed from a list of active

network stations if the response does not arrive within the second specific time.

3. The method as claimed in claim 1 or 2, wherein the enabling of the component (UI) which initiates the message transmission is accompanied by the generation of an error message for the network station which does not respond.

4. The method as claimed in one of the preceding claims, wherein the second specific time corresponds to the maximum duration for the response transmission.

5. The method as claimed in claim 4, wherein the maximum duration for the response transmission is 30 seconds.

6. The method as claimed in one of the preceding claims, wherein the message transmission is based on the HAVi Standard, where HAVi represents Home Audio/Video interoperability.

7. A network station for a network of distributed stations, having means for interchanging messages with another station, wherein a message transmission is allocated a maximum duration for the response transmission, **characterized by** monitoring means (MSYS) for monitoring whether the response arrives within a first specific time, enabling means (MSYS) for enabling the component which initiates the message transmission if the response does not arrive within the first specific time, second monitoring means (WPROC) for monitoring in the background, to determine whether the response arrives within a second specific time, and administration means (MSYS) which remove the station to which the message was addressed

from a list of active network stations if the response does not arrive within the second specific time.

8. A network station for a network of distributed stations, having means for interchanging messages with another station, wherein a message transmission is allocated a maximum duration for the response transmission, **characterized by** monitoring means (MSYS) for monitoring whether the response arrives within a first specific time, enabling means for enabling the component (UI) which initiates the message transmission if the response does not arrive within the first specific time, means for generation of an activity checking message (PING) which produce an activity checking message to the network station to which the original message was also sent if it is found that the response to the first message transmission has not arrived within the first specific time, second monitoring means (PING) for monitoring whether the response to the activity checking message arrives within a second specific time, and administration means (PING) which remove the station to which the first message was addressed from a list of active network stations if the response to the activity checking message does not arrive within the second specific time.

9. The network station as claimed in claim 7 or 8, having means which produce an error message for the network station which does not respond, accompanying the enabling of the component (UI) which initiates the message transmission.

10. The network station as claimed in one of claims 7 to 9, in which the maximum duration for the

response transmission to the activity checking message is set at 30 seconds.

11. The network station as claimed in one of claims 7 to 10, wherein the network station for interchanging data with other network stations is designed in accordance with the HAVi Standard, where HAVi represents Home Audio/Video interoperability.

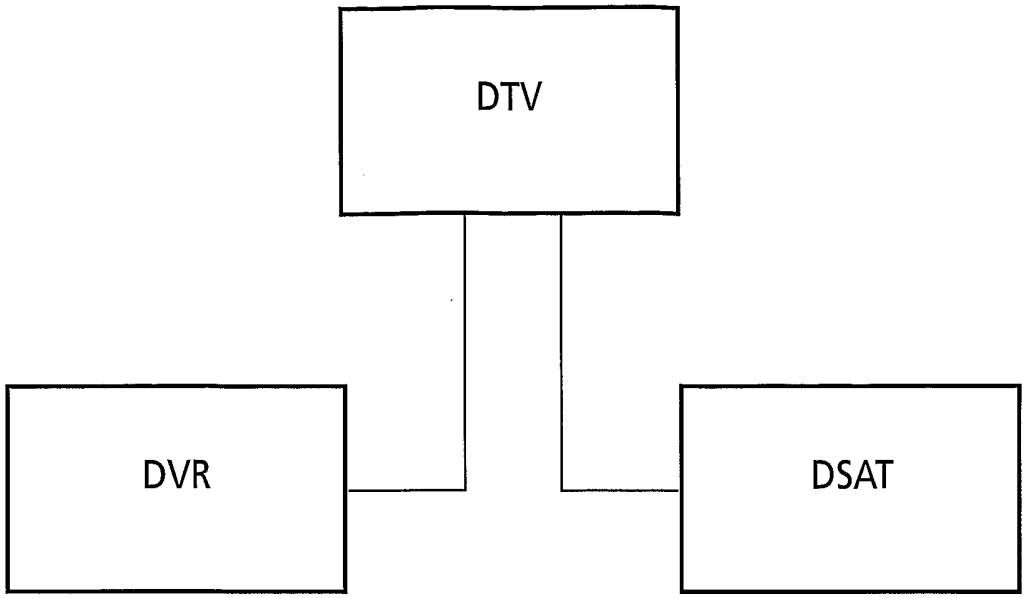

Fig.1

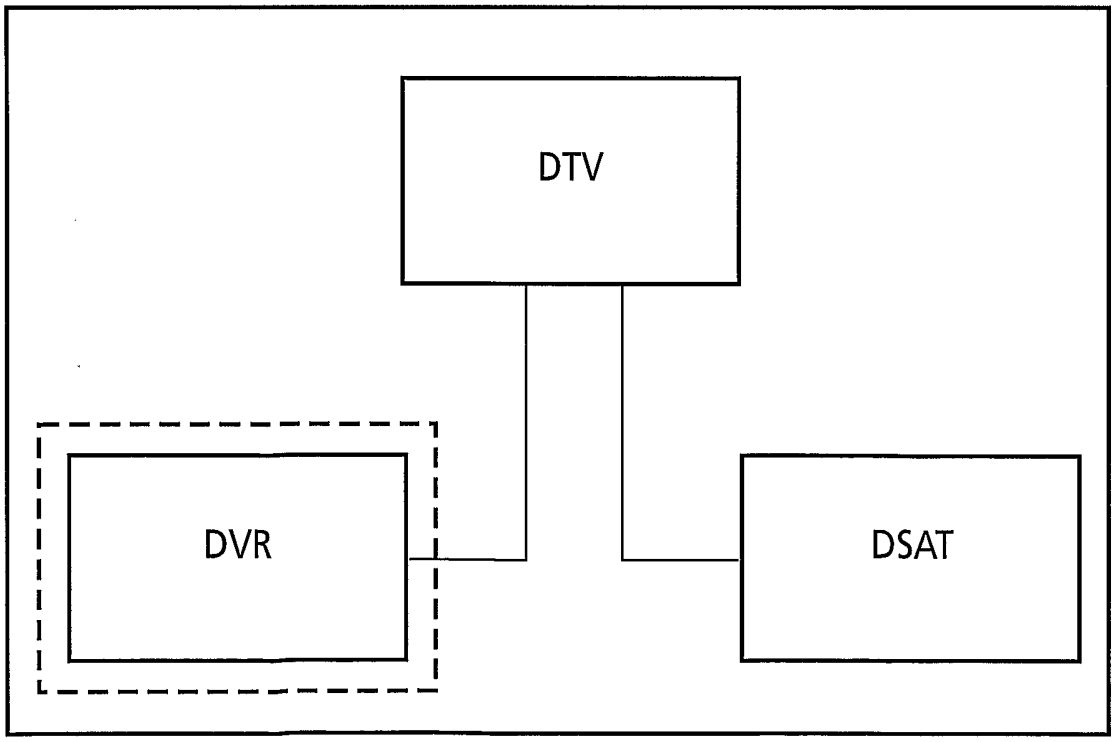

Fig.2

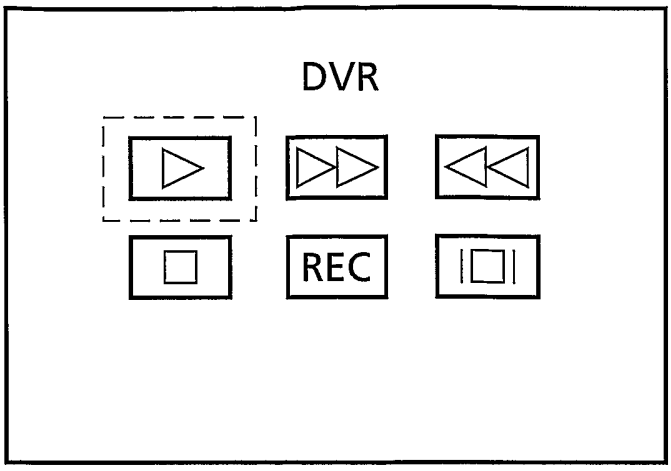

Fig.3

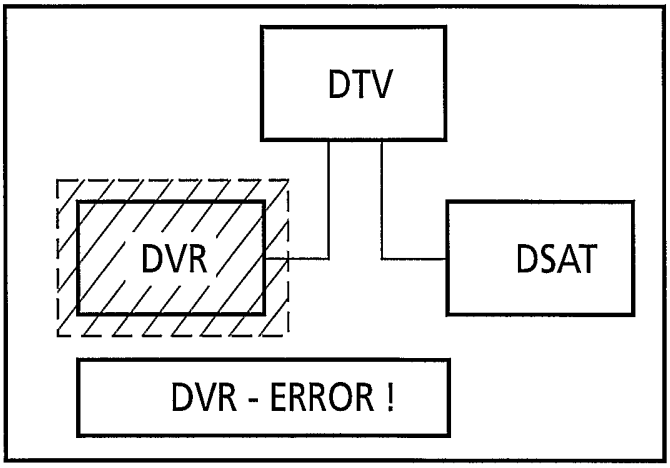

Fig.4

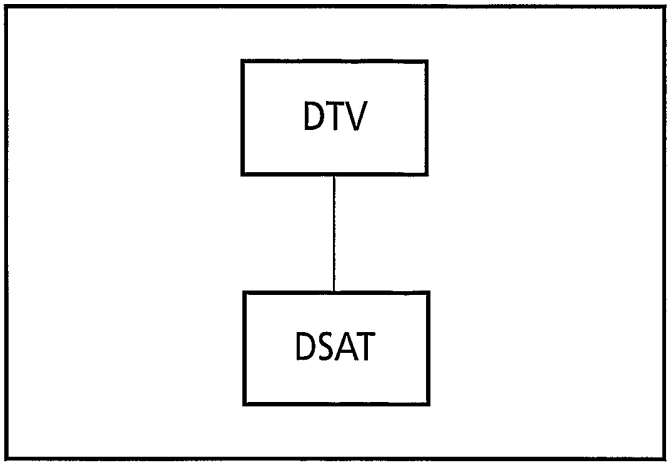

Fig.5

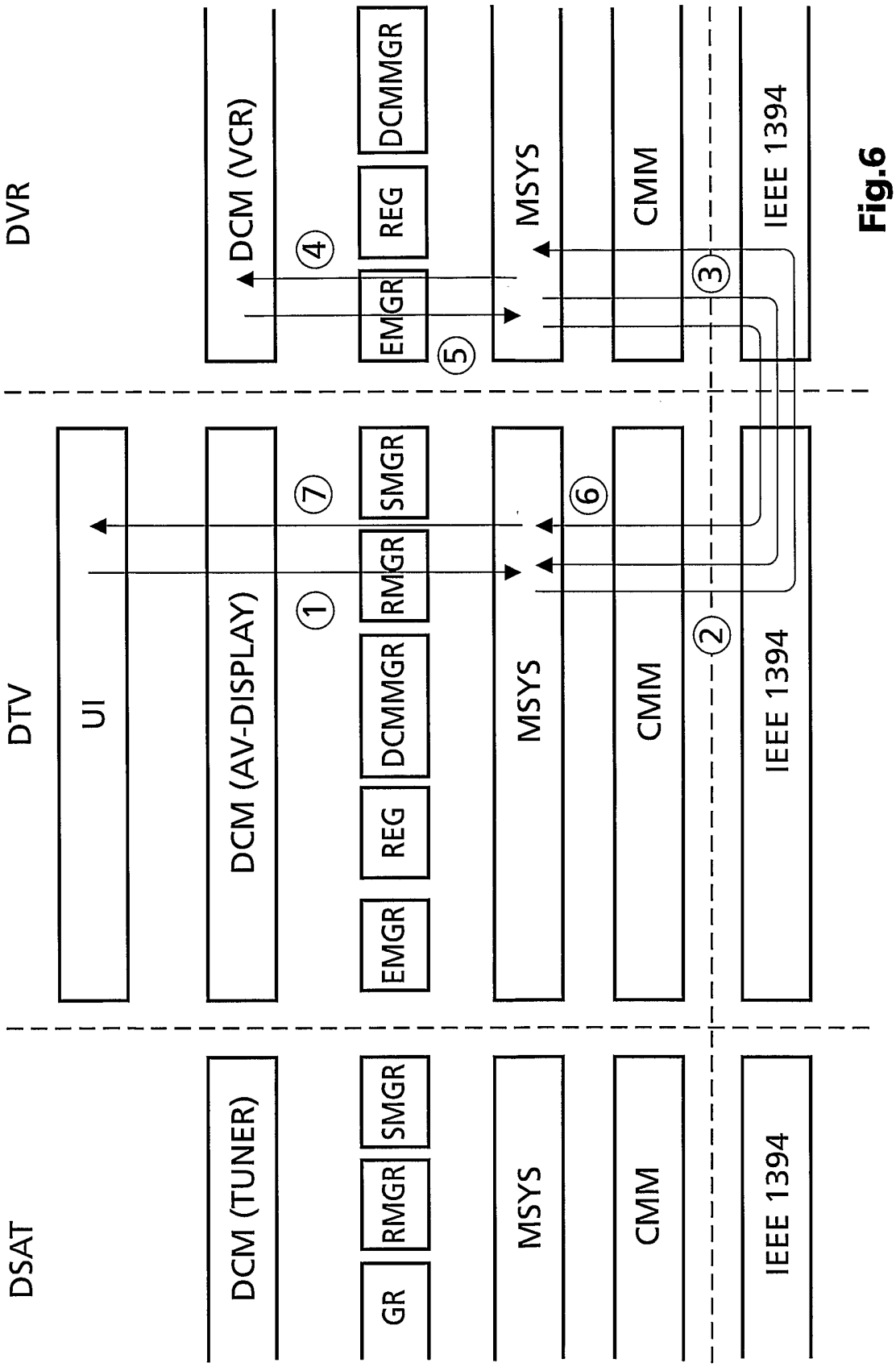
DSAT
DTV
DVR
DCM (TUNER)
GR
RMGR
SMGR
MSYS
CMM
IEEE 1394
UI
DCM (AV-DISPLAY)
EMGR
REG
DCMMGR
RMGR
SMGR
MSYS
CMM
IEEE 1394
DCM (VCR)
EMGR
REG
DCMMGR
MSYS
CMM
IEEE 1394
1
2
3
4
5
6
7

Fig.6

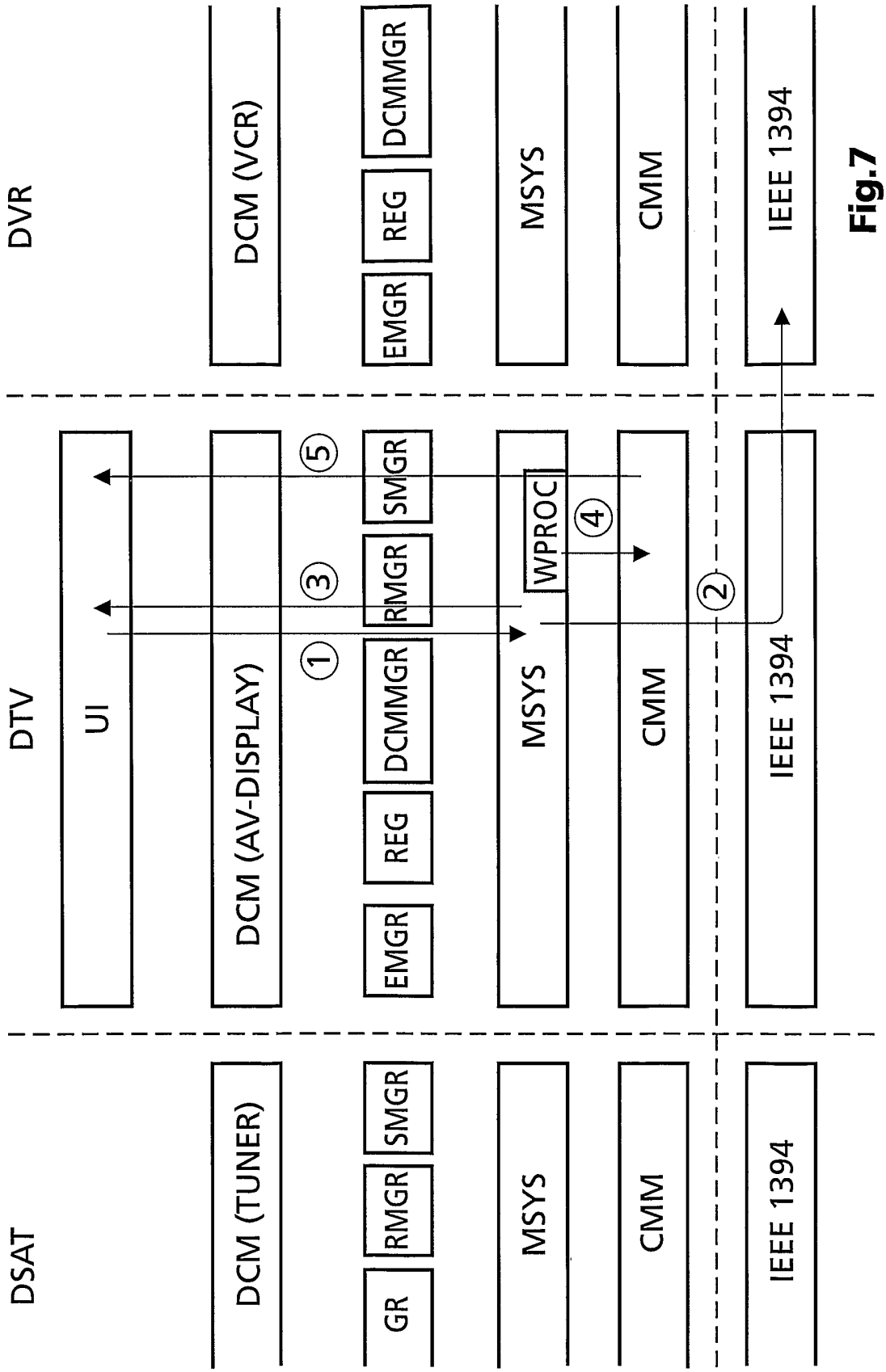
DVR
DCM (VCR)
EMGR
REG
DCMMGR
MSYS
CMM
IEEE 1394
DTV
UI
DCM (AV-DISPLAY)
EMGR
REG
DCMMGR
RMGR
SMGR
WPROC
MSYS
CMM
IEEE 1394
DSAT
DCM (TUNER)
GR
RMGR
SMGR
MSYS
CMM
IEEE 1394
1
2
3
4
5

Fig.7

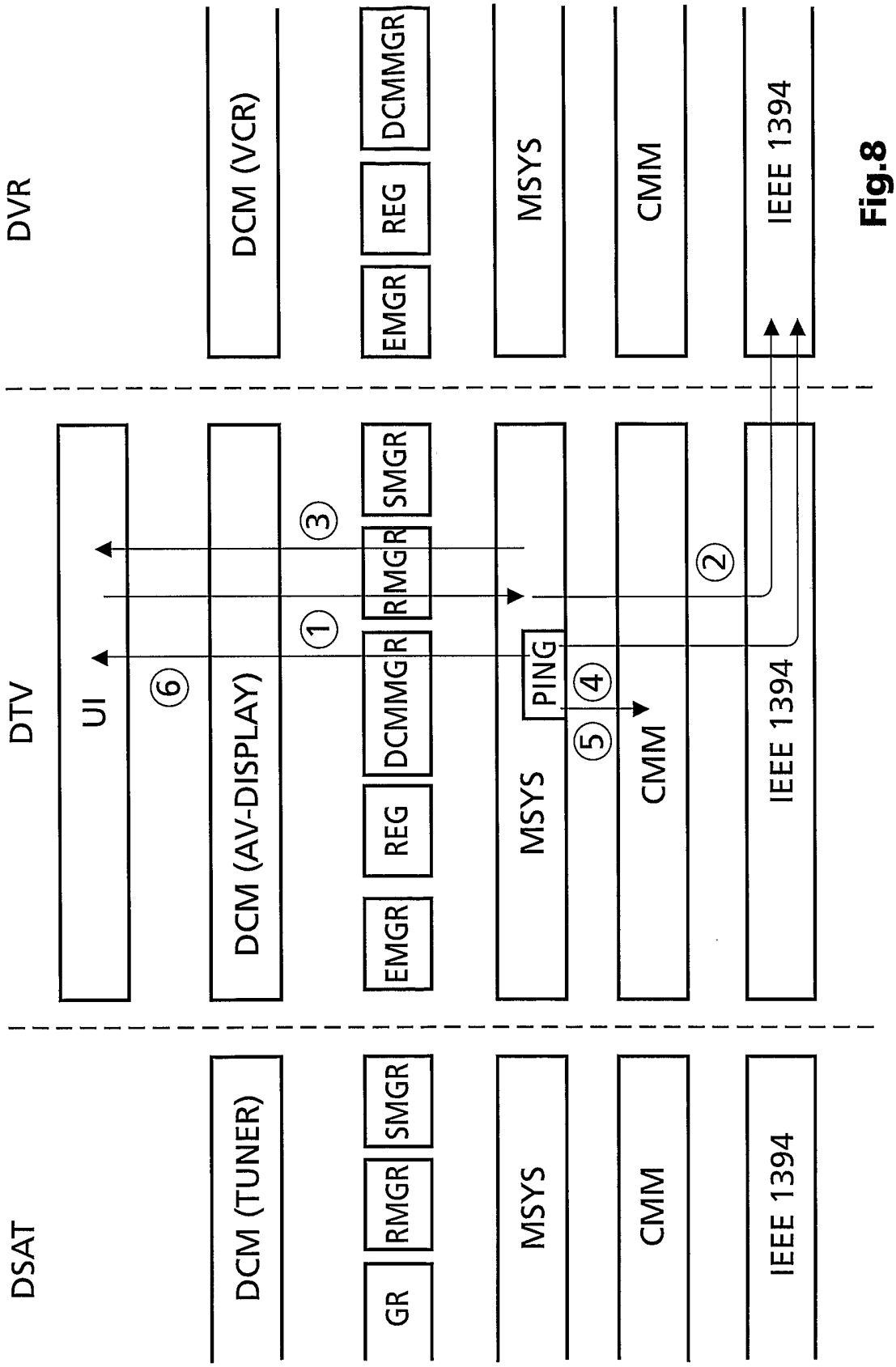
DVR
DCM (VCR)
EMGR
REG
DCMMGR
MSYS
CMM
IEEE 1394
DTV
UI
DCM (AV-DISPLAY)
EMGR
REG
DCMMGR
RMGR
SMGR
MSYS
PING
CMM
IEEE 1394
DSAT
DCM (TUNER)
GR
RMGR
SMGR
MSYS
CMM
IEEE 1394
①
②
③
④
⑤
⑥

Fig.8

INTERNATIONAL SEARCH REPORT

International Application No
PCT/EP 03/14932

A. CLASSIFICATION OF SUBJECT MATTER
IPC 7 H04L12/28 H04L29/06 H04L12/24 H04L1/18

According to International Patent Classification (IPC) or to both national classification and IPC

B. FIELDS SEARCHED

Minimum documentation searched (classification system followed by classification symbols)
IPC 7 H04L

Documentation searched other than minimum documentation to the extent that such documents are included in the fields searched

Electronic data base consulted during the international search (name of data base and, where practical, search terms used)
EPO-Internal, PAJ

C. DOCUMENTS CONSIDERED TO BE RELEVANT

Category °	Citation of document, with indication, where appropriate, of the relevant passages	Relevant to claim No.
X	EP 0 777 357 A (NCR INT INC) 4 June 1997 (1997-06-04) column 1, lines 10-13 column 2, line 32 - column 3, line 6 column 7, lines 7-23 column 9, lines 13-19	1-11
A	EP 0 682 425 A (AT & T CORP) 15 November 1995 (1995-11-15) column 3, line 24 - column 4, line 25	1
A	US 5 774 479 A (CHEN YUE LONG ET AL) 30 June 1998 (1998-06-30) column 4, line 52 - column 5, line 6 column 9, lines 49-56	1
A	US 5 319 641 A (FRIDRICH MAREK J ET AL) 7 June 1994 (1994-06-07) column 23, lines 18-21	4,9

☐ Further documents are listed in the continuation of box C.

☒ Patent family members are listed in annex.

° Special categories of cited documents :

"A" document defining the general state of the art which is not considered to be of particular relevance

"E" earlier document but published on or after the international filing date

"L" document which may throw doubts on priority claim(s) or which is cited to establish the publication date of another citation or other special reason (as specified)

"O" document referring to an oral disclosure, use, exhibition or other means

"P" document published prior to the international filing date but later than the priority date claimed

"T" later document published after the international filing date or priority date and not in conflict with the application but cited to understand the principle or theory underlying the invention

"X" document of particular relevance; the claimed invention cannot be considered novel or cannot be considered to involve an inventive step when the document is taken alone

"Y" document of particular relevance; the claimed invention cannot be considered to involve an inventive step when the document is combined with one or more other such documents, such combination being obvious to a person skilled in the art.

"&" document member of the same patent family

Date of the actual completion of the international search	Date of mailing of the international search report
19 May 2004	27/05/2004

Name and mailing address of the ISA	Authorized officer
European Patent Office, P.B. 5818 Patentlaan 2 NL – 2280 HV Rijswijk Tel. (+31–70) 340–2040, Tx. 31 651 epo nl, Fax: (+31–70) 340–3016	Dupuis, H

INTERNATIONAL SEARCH REPORT

Information on patent family members

International Application No
PCT/EP 03/14932

Patent document cited in search report	Publication date	Patent family member(s)	Publication date
EP 0777357 A	04-06-1997	US 5710885 A	20-01-1998
		EP 0777357 A2	04-06-1997
		JP 9186688 A	15-07-1997
EP 0682425 A	15-11-1995	US 5550848 A	27-08-1996
		AU 689223 B2	26-03-1998
		AU 1797895 A	23-11-1995
		CA 2145701 A1	14-11-1995
		CN 1126400 A	10-07-1996
		DE 69529016 D1	16-01-2003
		DE 69529016 T2	17-07-2003
		EP 0682425 A2	15-11-1995
		JP 3258523 B2	18-02-2002
		JP 8046666 A	16-02-1996
US 5774479 A	30-06-1998	AU 689374 B2	26-03-1998
		AU 4766696 A	16-10-1996
		CA 2190142 A1	03-10-1996
		CN 1149919 A	14-05-1997
		EP 0763225 A1	19-03-1997
		WO 9630841 A1	03-10-1996
US 5319641 A	07-06-1994	AU 9099191 A	25-06-1992
		DE 69132573 D1	10-05-2001
		DE 69132573 T2	05-09-2002
		EP 0560886 A1	22-09-1993
		EP 1022880 A2	26-07-2000
		WO 9210041 A1	11-06-1992