US00D429153S

United States Patent [19]

Gabriel et al.

[11] Patent Number: Des. 429,153

[45] Date of Patent: ** Aug. 8, 2000

[54] **BOTTLE CAP**

[75] Inventors: **Edward J. Gabriel**, Placentia; **William V. Stucker**, Irvine, both of Calif.

[73] Assignee: **Aquatec Water Systems, Inc.**, Irvine, Calif.

[**] Term: **14 Years**

[21] Appl. No.: **29/112,224**

[22] Filed: **Oct. 14, 1999**

[51] **LOC (7) Cl.** **09-07**

[52] **U.S. Cl.** **D9/447**

[58] **Field of Search** D9/435, 436, 447, D9/449, 450; 222/173, 185.1, 207

[56] **References Cited**

U.S. PATENT DOCUMENTS

D. 264,215 5/1982 Kaplan et al. ..... D9/447 X
D. 285,538 9/1986 Trumstedt ..... D9/447 X
D. 314,339 2/1991 Dubach D9/447
4,890,772 1/1990 Heuberger et al. ..... 222/185.1 X
5,730,327 3/1998 Stern ..... 222/207 X

Primary Examiner—Cathron B. Matta
Attorney, Agent, or Firm—Sughrue, Mion, Zinn, Macpeak & Seas, PLLC

[57] **CLAIM**

The ornamental design for a bottle cap, as shown and described.

DESCRIPTION

FIG. **1** is a perspective view of the top, front and left side of a bottle cap showing our new design;
FIG. **2** is a front elevational view thereof;
FIG. **3** is a rear elevational view thereof;
FIG. **4** is a top plan view thereof;
FIG. **5** is a left side elevational view thereof; and,
FIG. **6** is a right side elevational view thereof.
The bottom and interior of the bottle cap form no part of the claimed design.

1 Claim, 6 Drawing Sheets

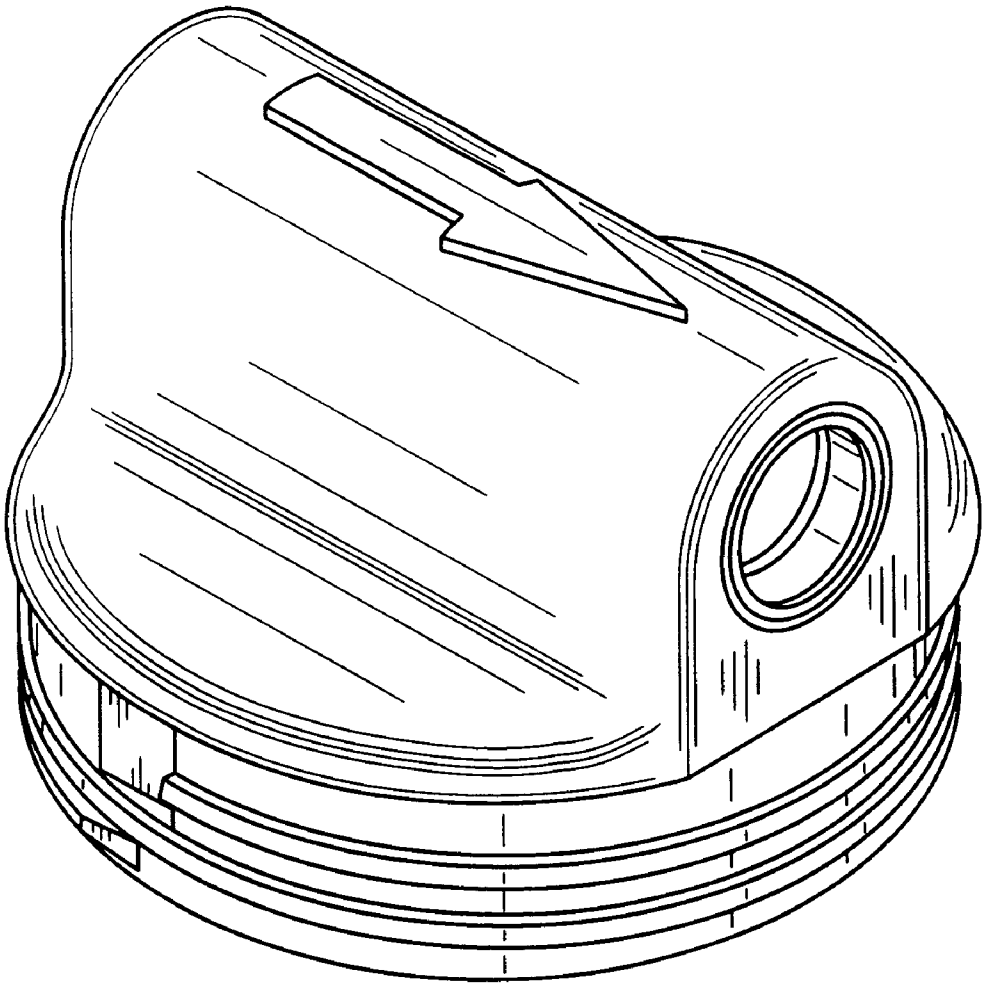

FIG. 1

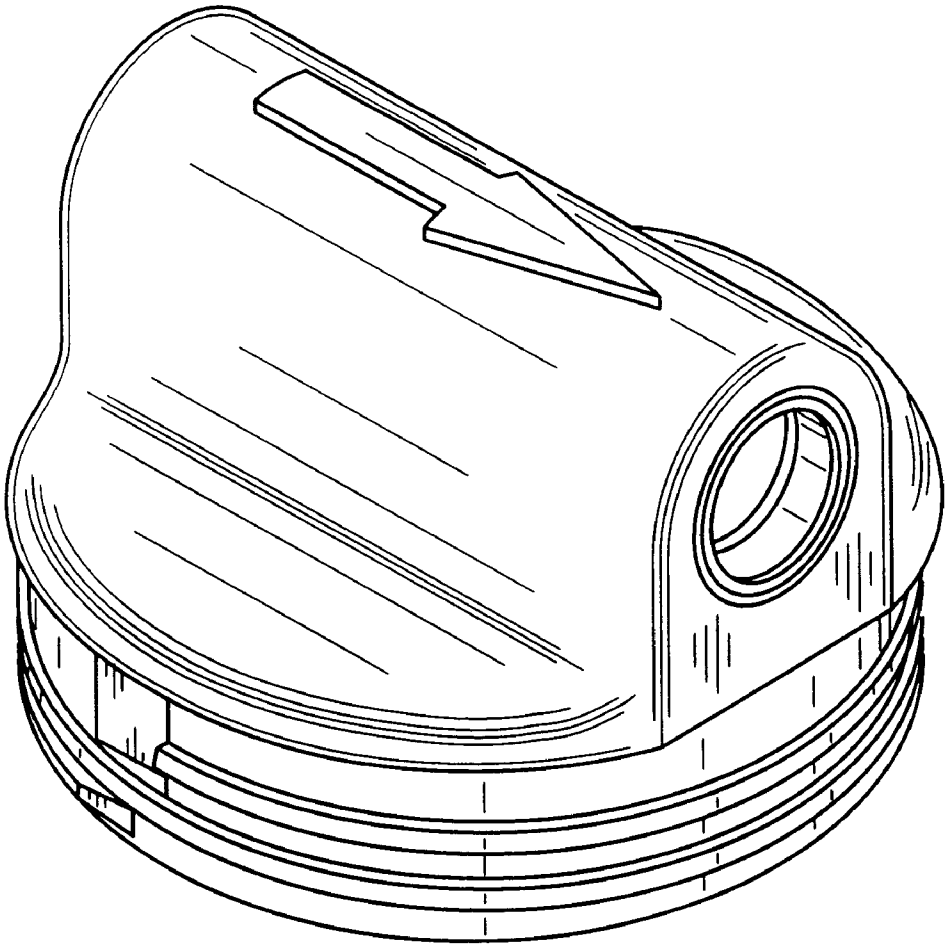

FIG. 2

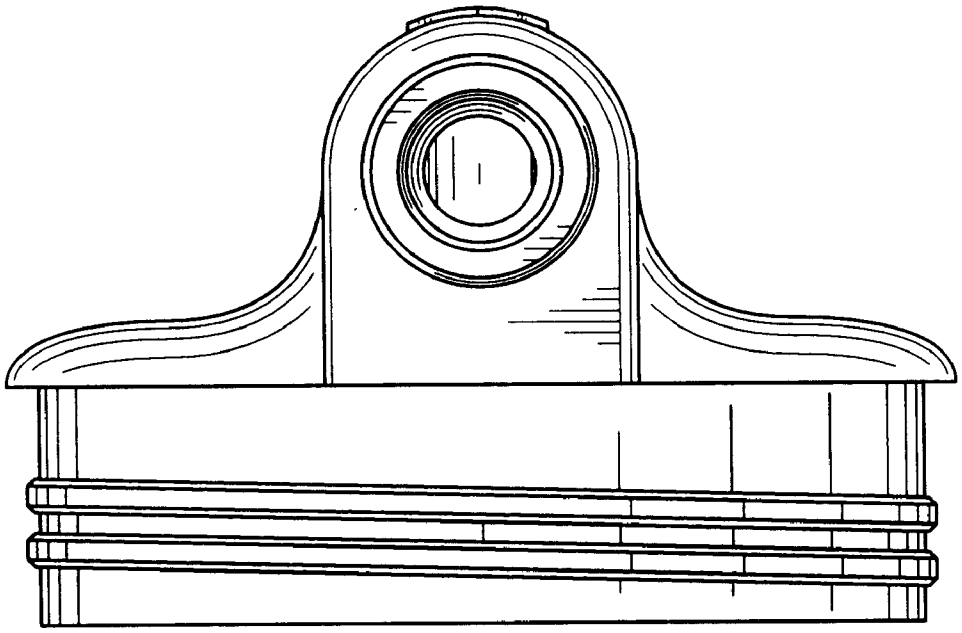

FIG. 3

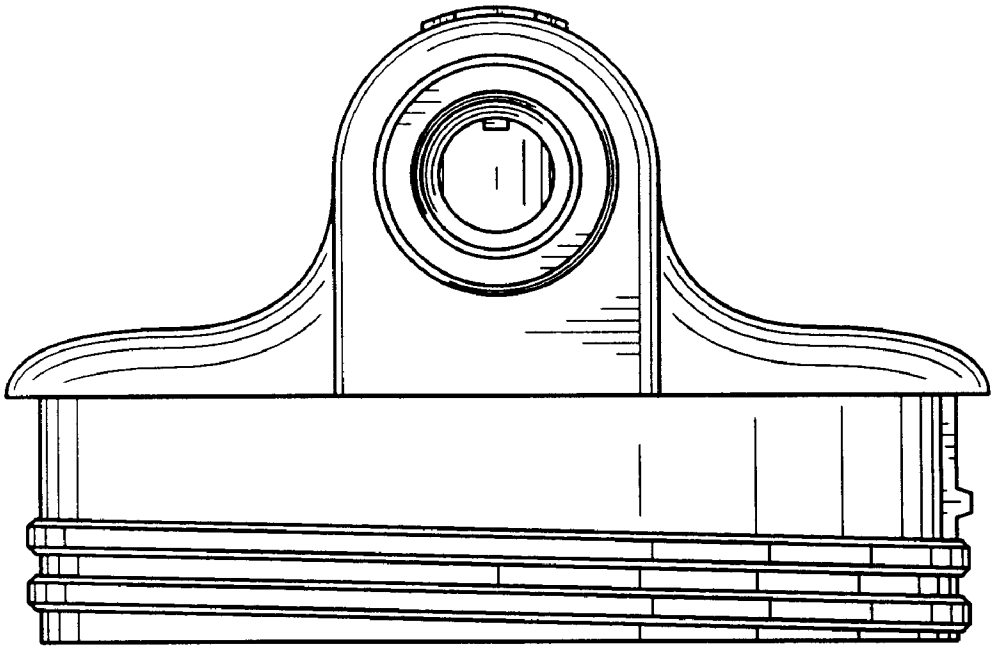

FIG. 4

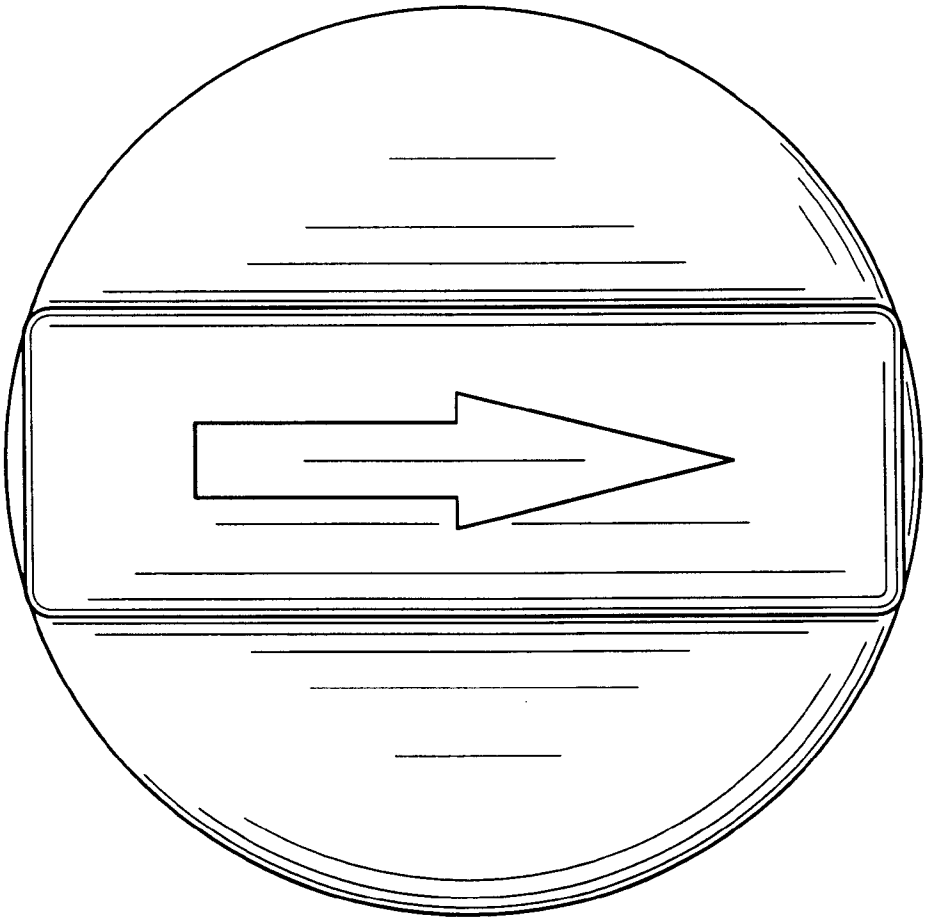

FIG. 5

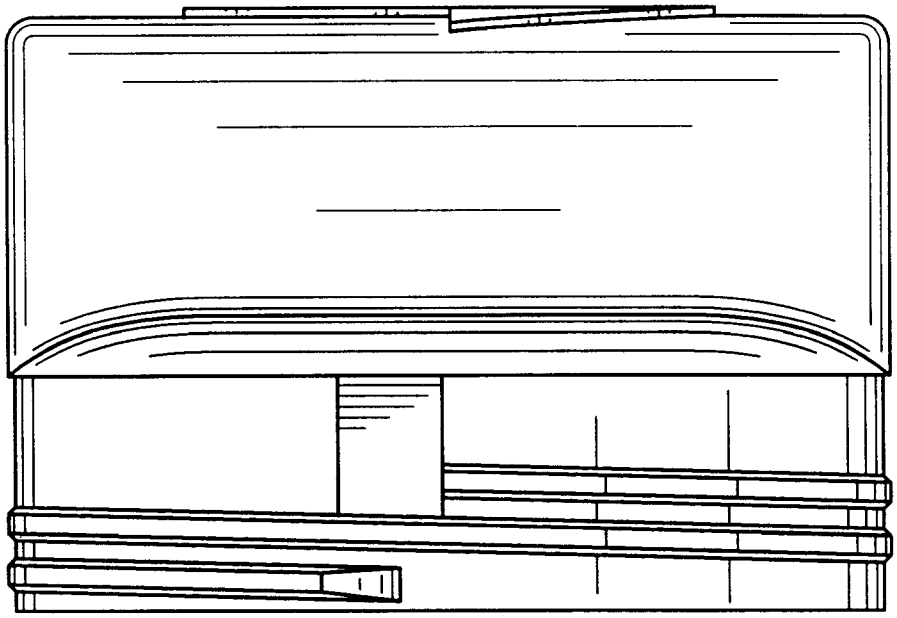
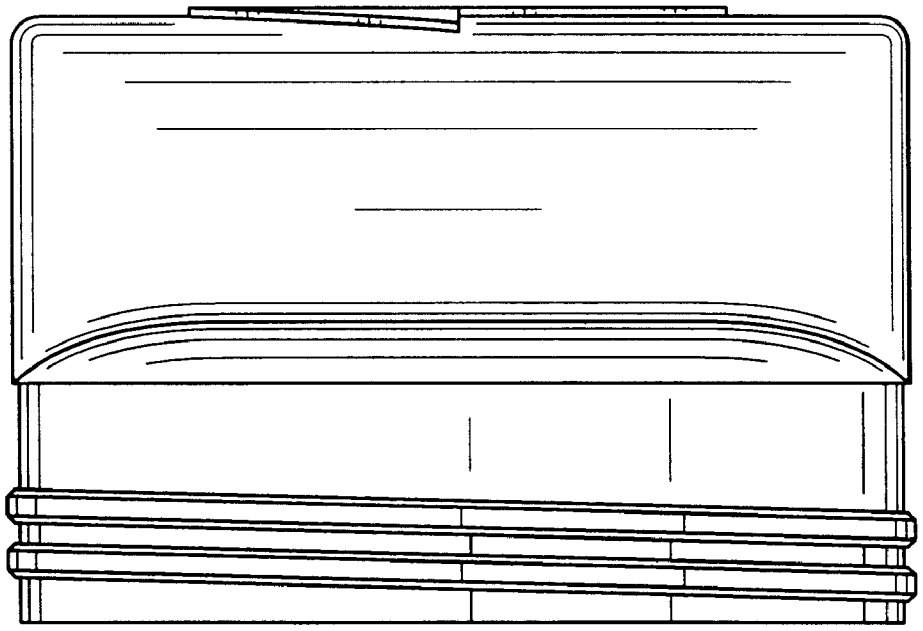
FIG.6