July 23, 1929. A. WEBER 1,722,238

ILLUMINATED WRITING IMPLEMENT

Filed July 27, 1927

Fig. 1

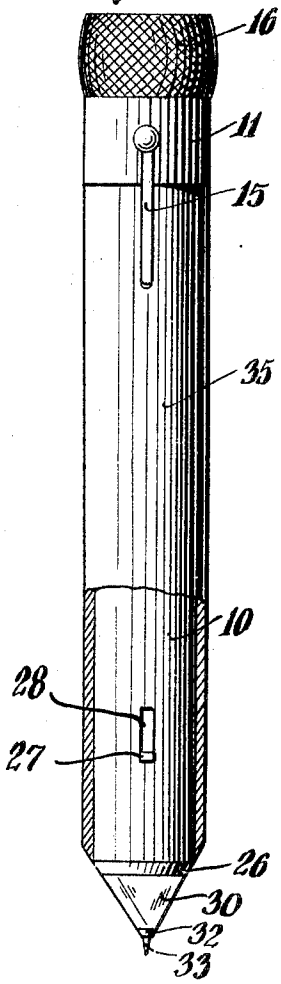


Fig. 2

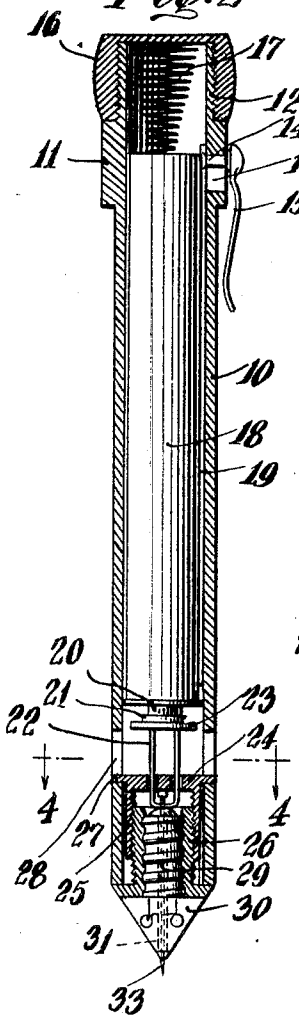


Fig. 3

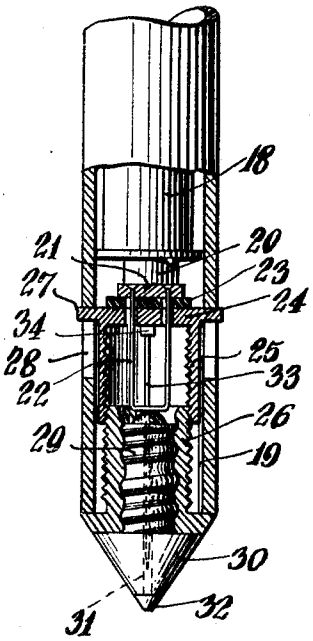


Fig. 4

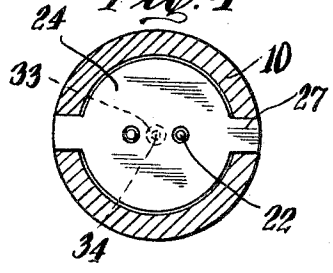


Fig. 5

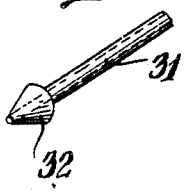


Fig. 6

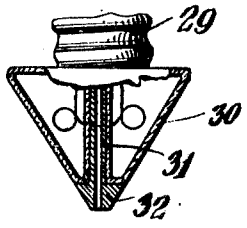


Inventor

Albert Weber

By his Attorney

Marvin Palmer

Patented July 23, 1929. 1,722,238

# UNITED STATES PATENT OFFICE.

ALBERT WEBER, OF PROVIDENCE, RHODE ISLAND.

## ILLUMINATED WRITING IMPLEMENT.

Application filed July 27, 1927. Serial No. 208,794.

This invention relates to writing implements and more particularly to types which may be used for making notations at night or in dark places.

In the past, notations or inscriptions made in the dark, were usually unintelligible and could not be written on a straight line, thus rendering them practically useless.

It is therefore the main object of this invention to provide a pencil having an electric light attached thereto, so that the surface upon which it is desired to make notations, may be illuminated.

A still further object is to provide a novel means for feeding the lead to the point as it is used.

These several objects are attained by the novel construction, combination and arrangement of parts, hereinafter described and illustrated in the accompanying drawing, in which:—

Figure 1 is a partial side elevational, partial longitudinal sectional view of an illuminated writing implement made in accordance with this invention.

Figure 2 is a longitudinal sectional view of the same, the outer casing being removed to show the inner construction.

Figure 3 is an enlarged, fragmentary, partial side elevational, partial longitudinal sectional view of the illuminated lead-containing end of the pencil.

Figure 4 is a transverse sectional view, taken on line 4—4 of Figure 2 and drawn to an increased scale.

Figure 5 is a perspective enlarged view of the lead containing sleeve.

Figure 6 is a fragmentary, longitudinal sectional view taken approximately through the center line of the illuminating element.

In the drawing, the numeral 10 generally designates an inner tubular casing having an integral collar 11 and a threaded end 12 adjacent thereto, the collar being provided with a slot 13, in which is operable a switch 14 of any preferred type, having the usual pencil clip 15 formed therewith, the end 12 being covered with a cap 16 pressing an expansion spring 17 against one end of a cylindrical electric battery 18 disposed in the casing 10.

The negative pole in the battery engages an elongated metal strip contact 19 on the inner side of the casing 10, the positive pole 20 contacting a disc 21, in which is anchored the ends of a U-shaped metal conductor 22.

The conductor 22 passes through an insulating disc 23 fixed to the closed end 24 of an internally threaded sleeve 25 engaging an externally threaded socket 26, the closed end 24 of the sleeve being provided with oppositely disposed lugs 27 extending beyond the casing 10 through slots 28.

A pair of small leaf springs 50 and 51 are attached to opposite sides of the sleeve 25 and frictionally engage the walls of the casing 10 to hold the sleeve, and socket 26 in desired adjusted positions.

Engageable in the socket 26 is the base 29 of a conical electric bulb 30, the inner end of the base 29 contacting the yoke of the conductor 22.

The bulb 30 and base 29 are provided with a central bore, in which is engaged a sleeve 31 having a conical tip 32 and which is receptive of a lead 33, the inner end of the lead engaging at all times with a block 34, centrally fixed on the closed end 24 of the sleeve 25.

Disposed over the casing 10 and extending from the collar 11 to the converging walls of the socket 26 is an outer casing 35 provided with a slot, not shown, through which extends the clip 15 and its connection with the switch 14.

Thus, in operation, the battery 18 is at all times maintained in contact with the disc 21 by a spring 17 and when it is desired to illuminate the bulb 30, the switch 14 is moved toward the lead end of the pencil, thus completing the circuit through the contact 19 which is moved downward to contact with disc 18′, the latter being in contact with the negative pole 18 of the battery. The circuit is thus completed from the positive pole of the battery through contact 22 to the base of the lamp, thence to the sleeves 25, 26, to the casing 10 and through contact 19 to the negative pole.

To feed the pencil, the bulb is gripped in one hand and the body of the pencil is rotated by the other hand, which action, because of engagement of the socket 26 with the sleeve 25, will draw the latter and its integral end 24 toward the point of the pencil, thus forcing the lead through the sleeve 31 to extend slightly beyond the tip 32, the sleeve 25 being prevented from rotating by means of the lugs 27, engaging in the slots 28.

From the foregoing, it will be seen that a writing implement has been disclosed, having means combined therewith enabling the

use of the implement in the night or in dark places by illuminating the surface upon which it is desired to make notations.

While the above is descriptive of the preferred embodiment of my invention, it is to be understood that changes may be made in size, proportion, material and the like without the exercise of invention or departing from the spirit and scope of the claim hereto appended.

Having thus described my invention, what I claim as new and desire to secure by Letters Patent, is:—

An illuminating writing implement comprising a casing, a sleeve slidable in said casing, a rotatable socket engageable in said sleeve and connected therewith to slide the sleeve upon rotation of the socket, an electric bulb in said socket, a sleeve passing through said bulb, said sleeve containing a writing lead, a battery in said casing, and connections intermediate said battery and said bulb, said lead being projected beyond said bulb by said sleeve upon the rotation of said bulb and sleeve.

In witness whereof I have affixed my signature.

ALBERT WEBER.