Feb. 21, 1967 W. LEW 3,305,285

PANEL-LOCKED FURNITURE

Filed May 28, 1965

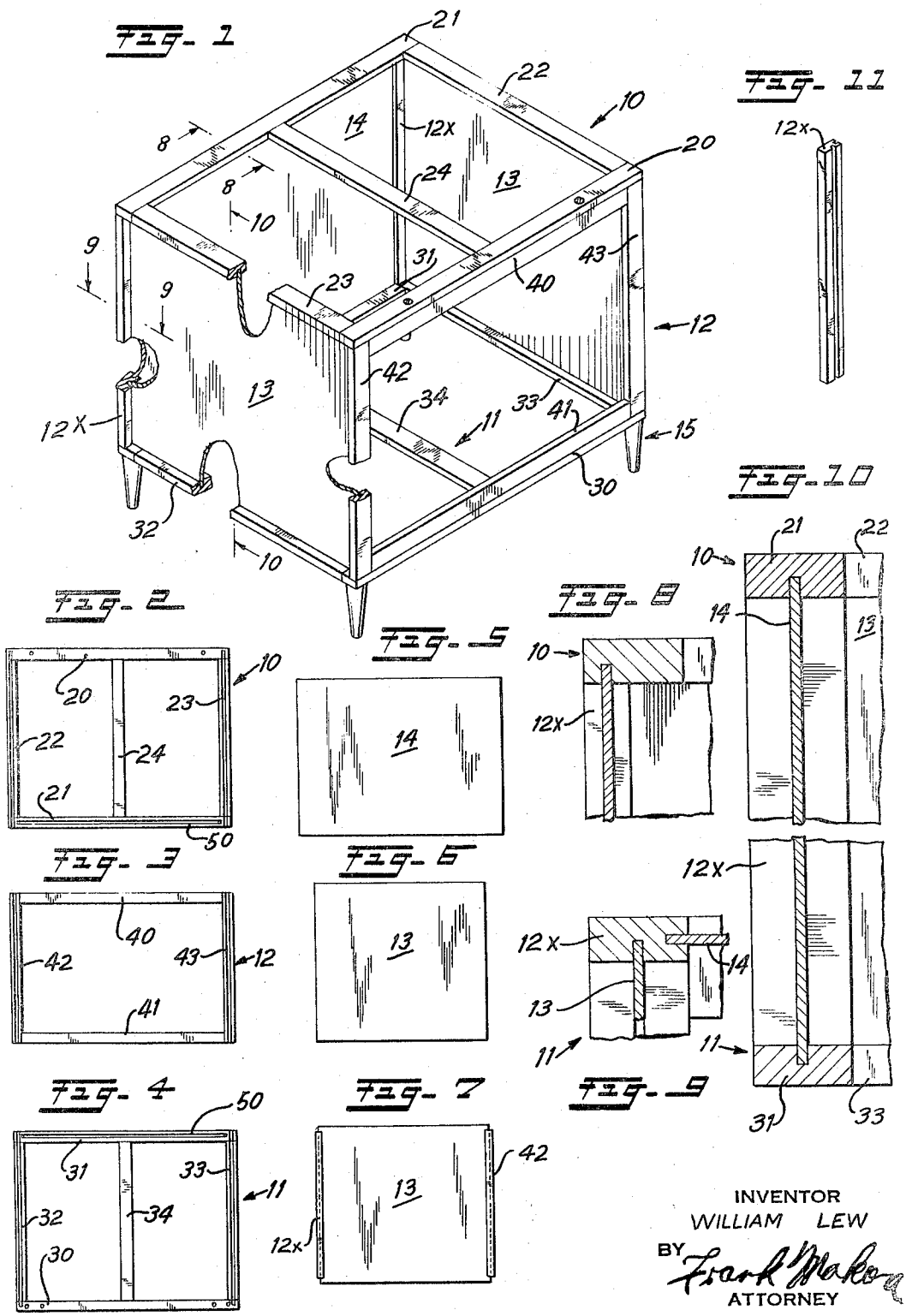

INVENTOR
WILLIAM LEW
BY Frank Makon
ATTORNEY

United States Patent Office 3,305,285 Patented Feb. 21, 1967

3,305,285

PANEL-LOCKED FURNITURE

William Lew, 27 Pine Drive N., Roslyn, N.Y. 11576

Filed May 28, 1965, Ser. No. 459,787
1 Claim. (Cl. 312—257)

This invention relates to furniture wherein two or more wall panels assist in the locking together of the furniture.

In conventional furniture construction using side panels such as Masonite and like hardboard panels, the side panels are disposed in the opposing vertical channels of a pair of opposing vertical end retaining members and are of the same height as said vertical end retainers.

According to this invention the locking panels are provided with suitable overlap beyond both ends of the opposed retainers, said overlaps functioning as opposing tongues for insertion into grooves or cavities disposed in the top and the bottom frame pieces.

According to this invention the panel furniture pieces may be interlocked, using the opposing overlap portions of the panels as tongues to effectuate said interlocking.

Accordingly in the manufacture of the panel interlocked furniture of this invention a minimum of metal securing means is used.

In fact, use of glue alone in connection with the edges of said panels produces rigid structural furniture.

This invention is described by means of an illustrative embodiment of a cabinet shell shown in the accompanying drawing in which;

FIG. 1 is a perspective view of a cabinet shell prior to being adapted to receive a plurality of drawers, and broken away in part to show the construction thereof,

FIG. 2 is an interior view of the top frame showing the grooves therein,

FIG. 3 is an inside view of a side frame showing the opposed grooves therein,

FIG. 4 is an inside view of the bottom frame showing the grooves therein adapted to underlie the grooves of the top frame of FIG. 2,

FIG. 5 is a view of a pressboard back locking panel,

FIG. 6 is a view of a pressboard side locking panel,

FIG. 7 is a side view of a locking panel disposed in a front frame and a back post,

FIG. 8 is a section view taken on line 8—8 of FIG. 1,

FIG. 9 is a section view taken on line 9—9 of FIG. 1,

FIG. 10 is a section view taken on line 10—10 of FIG. 1 and

FIG. 11 is a perspective view of a a rear corner post.

Turning to the drawing and FIG. 1 in particular, the major structural parts of this cabinet shell are a rectangular top frame 10, a like rectangular bottom frame 11, a rectangular front frame 12, a pair of dual grooved posts 12X, a pair of rectangular pressboard side panels 13, a rectangular back panel 14 and a plurality of legs 15.

The top frame 10 is made from a plurality of five wooden pieces, namely a front member 20, a back member 21, a side member 22, another like side member 23 and a cross member 24.

Similarly the bottom frame 11 is made of five members, namely a front member 30, a rear member 31, a side member 32, another side member 33 and a cross member 34.

The front frame 12 is made from four members, namely top member 40, bottom member 41, side member 42 and side member 43.

The back posts 12X are each dual grooved so as to lockingly receive both the back panel and a respective side panel.

The side panel receiving vertical grooves of the posts 12X and front frame members 42 and 43 extend from end to end of said posts 12X and members 42 and 43 (FIGS. 2 and 11) and are of a width to snugly receive said panels.

The side panel receiving grooves of the frame members 22 and 23 as well as the grooves of the bottom frame members 32 and 33 preferably are in the form of cavities of a length and width to snugly receive the panel 13.

However, as shown in FIGS. 2 and 4 these side panel receiving grooves in the top and in the bottom frame may extend to the back edge of the frames. But under no circumstances do these grooves extend through the top front frame member 20 and the bottom front frame 30 because such a condition would disfigure the furniture.

The top rear frame member 21 and the bottom rear frame member 31 are provided with like longitudinal panel receiving cavities 50 to snugly receive the top and bottom edges of the back panel 14.

In preparing and assembling the furniture of this invention the top grooved frame 10, the bottom grooved frame 11 and the front grooved frame 12 are prepared by the use of glue and/or nails and the like.

Next, the pair of dual grooved corner posts 12X are prepared.

The legs 15 are secured by conventional means to the bottom frame 11 in suitable spaced relationship.

To the prepared grooved bottom frame 11 having its legs 15 secured thereto, the bottom edges of the pair of side panels 13 and back panel 14 are inserted in their respective grooves which are of a depth to hold the said three panels in a substantially upright position.

Next, both of the corner posts 12X are added vertically to receive the respective vertical edges of the side panels and the back panel. Next, the front frame 12 is pushed into place.

The assembled structure consisting of the three panels, the front frame 12 and the pair of rear posts is a rigid one, even without the use of glue on the panel edges.

As shown in FIG. 7, the panel 13 is of a height greater than that of its vertical retaining members 12X and 42. This height is equal to that of these members plus the depth of the top and the bottom groves of the corresponding panel receiving members 23 and 32.

Similarly the height of the back panel 14 is greater than that of the corner posts 12X by the combined depth of the grooves in top member 21 and bottom member 31.

The top frame 10 is then placed upon the above assembled structure so that the protruding or tongue edges of the panels are disposed in the corresponding grooves in the top frame.

The result is a firmly panel locked structure wherein the protruding top and bottom tongue portions of the both side panels and the rear panel effect a locking or keying action in the grooves of the top and the bottom frames.

The interlocked furniture of this invention may be made with the use of only a pair of side pressboard panels. In such a case, the two rear posts 12X are incorporated into a rear rectangular frame upon whose exterior surface a rectangular piece of pressboard of the same size is nailed or otherwise secured.

This invention is of a generic or broad scope and hence includes panel locked furniture, chests, boxes and the like panel-locked on all four sides. Also the grooves used to lock the panels while preferably being all cavities, nevertheless these operative grooves may be all end-to-end channel grooves. Moreover, the locking of the four edges of the panels may be in combination, hence cavitied, and also in end to end channel grooves on the remaining edge or edges of the panel.

I claim:

Panel-locked rectangular furniture comprising a top four member integral rectangular frame having a front

member, and a rear member having a longitudinal cavity therein, and a pair of opposed side members, said side members having grooves therein extending partly into said front member and completely through said rear member; a bottom four piece integral rectangular frame identical to said top frame, said top and bottom frames being disposed over one another in opposed spaced-apart relationship with the grooves of the bottom frame being directly below the corresponding grooves of the top frame; a front four piece integral frame having a pair of side members extending the height of said front frame, each side member having an inwardly directed groove therein extending from the top of the front frame to the bottom thereof; a pair of longitudinal back posts of the height of said front frame, each post having a pair of grooves therein in adjacent walls and extending from the top to the bottom of said posts, said grooves of said posts being respectively directed to a side member of said front frame and to the longitudinal cavity of said top and bottom frames; a pair of side panels slidably disposed from the rear in the top and bottom frames to form respective sides of said furniture, said side panels being

slidably pushed into the grooves of the side member of the front frame to effect a locking engagement thereto; and a rear panel disposed in the longitudinal cavities of said top and bottom frames, said posts each engaging a vertical edge of one of said side panels and vertical edge of said rear panel in locking engagement.

References Cited by the Examiner

UNITED STATES PATENTS

1,285,572	11/1918	Adams	312—257 X
2,355,541	8/1944	Lew	312—257
2,360,451	10/1944	Stone	312—257
2,375,726	5/1945	Bales	312—257 X
2,722,468	11/1955	Perrin	312—257

FOREIGN PATENTS

123,811	3/1947	Australia.

CLAUDE A. LE ROY, *Primary Examiner.*

CHANCELLOR E. HARRIS, *Examiner.*

F. DOMOTOR, *Assistant Examiner.*