PCT WORLD INTELLECTUAL PROPERTY ORGANIZATION
International Bureau

INTERNATIONAL APPLICATION PUBLISHED UNDER THE PATENT COOPERATION TREATY (PCT)

(51) International Patent Classification 3 :		(11) International Publication Number:	WO 83/ 01902
A61N 1/00	A1	(43) International Publication Date:	9 June 1983 (09.06.83)

(21) International Application Number: PCT/US81/01574

(22) International Filing Date: 24 November 1981 (24.11.81)

(71)(72) Applicant and Inventor: KALFAIAN, Meguer, V. [US/US]; 962 Hyperion Avenue, Los Angeles, CA 90029 (US).

(81) Designated States: CH, DE, FR (European patent), GB, JP, SU.

Published
With international search report.

(54) Title: FIELD RADIATOR FOR CURING CANCER AND OTHER AILMENTS

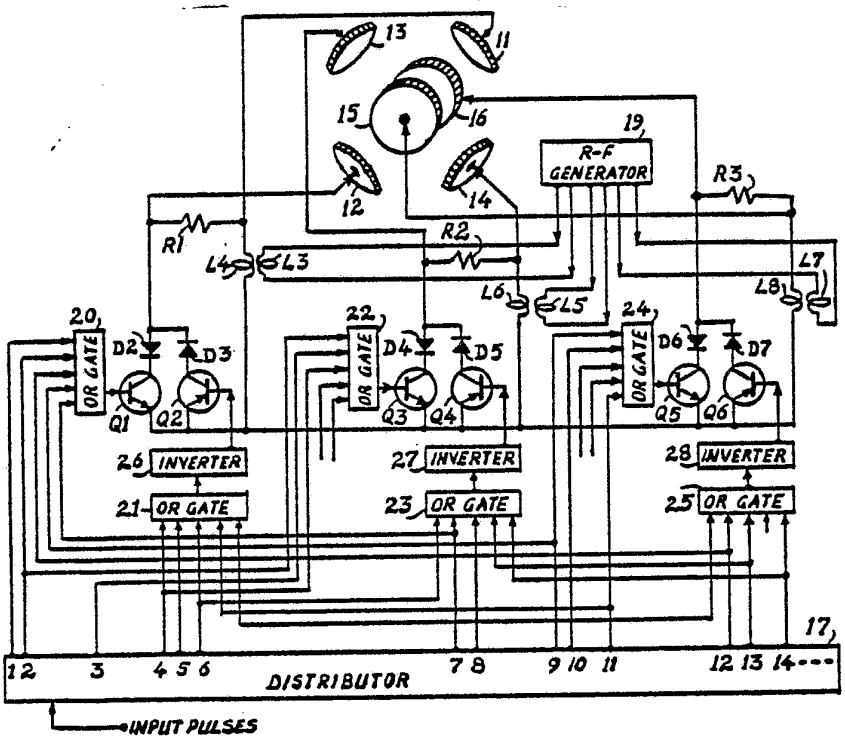

(57) Abstract

Natural ailments, including cancer, occur by depolarization of functional electrons in the molecular mechanisms of the tissue. Rectified diathermy radiation is switched to three pairs of spaced parallel electrodes (11, 12; 13, 14; and 15, 16), oriented at right angles respective of each pair, in an order of sequence such that, polar orientation of the field at the central area of said pairs of electrodes is roated two dimensionally within three mutually perpendicular planes. The ailing area of the tissue is then placed at said central area for normalizing the polar disorientations of said functional electrons, and thereby obtaining the desired cure.

FOR THE PURPOSES OF INFORMATION ONLY

Codes used to identify States party to the PCT on the front pages of pamphlets publishing international applications under the PCT.

AT	Austria	**LI**	Liechtenstein
AU	Australia	**LK**	Sri Lanka
BE	Belgium	**LU**	Luxembourg
BR	Brazil	**MC**	Monaco
CF	Central African Republic	**MG**	Madagascar
CG	Congo	**MR**	Mauritania
CH	Switzerland	**MW**	Malawi
CM	Cameroon	**NL**	Netherlands
DE	Germany, Federal Republic of	**NO**	Norway
DK	Denmark	**RO**	Romania
FI	Finland	**SE**	Sweden
FR	France	**SN**	Senegal
GA	Gabon	**SU**	Soviet Union
GB	United Kingdom	**TD**	Chad
HU	Hungary	**TG**	Togo
JP	Japan	**US**	United States of America
KP	Democratic People's Republic of Korea		

FIELD RADIATOR FOR CURING CANCER AND OTHER AILMENTS

description

This invention relates to apparatus for treating biological ailments, for example cancer, in tissue matter. More specifically, the invention relates to apparatus for treating ailing tissue through the application of rectified high frequency field rotating in three mutually perpendicular planes, for repolarizing depolarized functional electrons that cause the said ailment.

Background

The art of magnetic application for medical and biological treatment dates back several thousand years, as far as records indicate, due to observed beneficial effects that have been obtained under some methods of magnetic application. But the actual biological mechanism that responds to magnetic application has never been understood, and the experimentally skilled in this particular art have been trying various methods and systems of magnetic application with the hope of finding a way of ensuring that the magnetic field would strike the ailing area from the correct direction to effect the desired treatment.

The types of magnetic application that have been used so far, are: steady state magnetic application for a length of time from a singular direction; pulsed application from a singular direction for a length of time; and rotary application in a singula plane.

The main issue at this point is that, these experiments have indicated that magnetic application can result in some beneficial effects, although so far, only partial improvement of any ailment has been achieved. However, no matter how insignificant the beneficial effects achieved may have been,

BUREAU OMPI WIPO INTERNATIONAL

it must be concluded that the observed effects can result only if the mechanisms in the tissue matter are responsive to magnetic field. The present invention proceeds from the basis that all matters are constructed with atoms and electrons, and therefore, these are the component parts of the mechanisms of the living molecules that functionally respond to applied magnetism. This electron response represents a change in polar orientation and that the ailment which responds to applied field has been the result of pole disorientation of some of the active electrons from their normal polar orientations, rendering them inactive. The beneficial effects of well being resulting from the magnetic application, is due to those pole-disoriented electrons in the molecular mechanisms being reoriented to their normal polar orientations for regaining active functions, as representation of well being. The problem is, however, in normal tissue matter the molecular mechanisms containing these functional electrons are arrayed three dimensionally in the tissue, and polar reorientation of only those electrons that happen to be located within a single plane can be achieved and, accordingly, effect only a partial well being, which is what has been claimed by the previous experimenters.

Brief embodiment of the invention

There are used three pairs of spaced parallel electrodes oriented at right angles respective of each other's pairs, with sufficient space between the three pairs for an ailing body to be inserted therethrough. A rectified high frequency wave is applied to said three pairs of electrodes in a switching sequence, such that, a pulsating field is radiated crossing the body, the polar orientation of which changes successively, and with 180 degree polar reversals, in plurality of angular directions within three mutually perpendicular planes, for causing polar normalization of the depolarized electrons, and thereby obtaining the desired cure of said ailment.

BUREAU OMPI WIPO INTERNATIONAL

Scientific understanding of the art

For simple understanding of how electron depolarization occurs in the tissue matter, the following brief analytical explanation describes how the molecular mechanism in the tissue operates in normal healthy state - how it is transformed into an ailing (more specifically, a cancerous) state - and how the ailing state can be reversed into normal operating state.

Atomic arrangement of the molecule

A living molecule consists of a series of interleaved generators which operate in a specific sequence for generating specifically oriented magnetic fields at the periphery of the molecule. These complex magnetic fields are so timed and oriented that adjacent molecules control each other's triggering actions of generation alternately, so that an operational interrelationship is created between adjacent molecules for binding only similar operating molecules in the tissue structure, and rejecting alien molecules.

Each generator consists of a pair of atoms and a functional electron entrapped between the two atoms. This electron rotates back and forth within a limited arc of 45 degrees under the control of RNA (ribonucleic acid) and DNA (deoxyribonucleic acid) for generation of the required magnetic field. In operation, the electrons from the RNA source are released and drawn toward the functioning electron by the initial force of the pair of atoms, and regenerated by precessional (wobble) feed-back of the functioning electron. This electron rotates up to 45 degrees while precessing from the lowest precessional resonance of about 12 centimeter wavelength, up to 3 centimeter at 45 degrees of rotation. At a 45 degree rotation, a storage mechanism responsively resonant to 3 centimeter wavelength, stores and produces a pulsed voltage to trigger the DNA source for release of DNA atoms. A single DNA atom and a single positive RNA atom are released simultan-

BUREAU OMPI WIPO INTERNATIONAL

eously, which travel toward each other to the center of released string of RNA electrons. The travel motion of the RNA atoms toward each other causes sufficient magnetic flux for a single released electron to travel to the positive RNA atom, and the two atoms move away for elimination, or reuse.

From the above explanation, it is seen that the triggering action of the DNA source represents start of regeneration in a backward process, and this process continues until all of the released RNA electrons are eliminated for a new start of cyclic generation. This generates the specific field pattern that binds similar molecules together in normal state of operation. One important aspect of such operation is that both the RNA and DNA sources to the generator are attached to respective RNA and DNA supply atoms, so that when one of these sources releases an atom, it must be replenished by an atom from its string at the same time, because when this string is broken the source will not release an atom, no matter how much it may be stimulated to do so. Similarly, the RNA source will release electrons without being replenished by electrons, but when the magnetic tie of the string is broken, it becomes incapable of releasing electrons.

Transformation into cancerous state

The above given conditions relate to the normal operation of a molecule. Supposing now that during release of RNA electrons the RNA source is stimulated unnaturally (for example, by a cancer causing agent) for releasing far greater number of electrons than required for normal operation. In this case, the charge of the storage mechanism cannot start triggering action of the DNA for reverse regeneration, and the functioning electron is regenerated toward rotation to 90 degree (at this point electron precession stops completely), which is the maximum regeneration, and all operations stop at this point with no possibility of pole reversal. This is the stage in which

BUREAU OMPI WIPO INTERNATIONAL

strong paramagnetic resonance at about 3 centimeter wavelength can be obtained by an external magnet. As stated in the foregoing, alternate control of adjacent molecules is now interferred with, and the adjacent molecules also stop operation step by step, but very slowly at the beginning. In time, when a sufficient number of molecular mechanisms have become inoperative, the loss of the original peripheral magnetic field between adjacent molecules causes the strings of supply atoms to the RNA and DNA sources to recede, and because of the precessional radiation of the functioning electron has stopped at this point, the released RNA electrons are now drawn to the RNA source. The direction of withdrawal of these electrons is such that the functioning electron keeps rotating in the same direction that it had rotated to 90 degrees, and makes a complete 180 degree pole reversal, instead of returning to its normal polar orientation. This is the condition in which paramagnetic resonance cannot be obtained - it stops completely, but can be resonated by electromagnetic radiation at about decimeter wavelength. This is because the functioning electron is bound to the 180 degree pole reversed orientation so strongly that it will require much stronger magnetic field to rotate the electron from its new polar position, except by resonant radiation. In other words, without the help of RNA electrons in the molecule, external magnetism alone cannot influence the functioning electron for polar normalization.

Treatment of cancerous state

As explained above, the RNA and DNA sources in a molecule become separated from their strings of supply atoms only after some number of molecules from normal molecules become inoperative, because of a threshold volume in which they are forced to lose their magnetic hold of their supply strings. Thus, those inoperative molecules that are in the vicinity of normally operating molecules, have their RNA and DNA sources still intact with their respective strings of atoms, so that an external

BUREAU OMPI WIPO INTERNATIONAL

influence upon these functioning electrons from a direction at right angle to the pole disoriented position will rotate these electrons to 90 degree angle by the regenerative help of released RNA electrons. If now we change the direction of this influencing field to the direction of the electron's normal polar orientation, the released RNA electrons will now be removed by degenerative DNA released atoms, and the functioning electrons will be reoriented to their normal polar states for normal operation. Thus,all that is necessary is external influencing field from two proper directions. Since this is not possible to predetermine, however, we may arrange this external field to undergo angular changes in direction in three dimensions to obtain the desired treatment. As stated in the foregoing, the curing action starts from those inoperative molecules which have their RNA and DNA sources still intact with their respective supply strings, which means that cure starts from the outer periphery of the growth, and not from the center. Those strings of RNA and DNA sources which have been broken in the cancerous growth, are connected again magnetically step by step, as their adjacent molecules regain their normal operations.

In reference to the speed of establishing electron polar normalization, laboratory tests have shown that the relaxation time period of nuclear resonance obtained in living tissue is variable between one half to one eighth of a second. Therefore, if a complete 180 degree polar reversal is to be established by two 90 degree angular steps, an average switching speed of eight per second would be proper, but speed control may be included so that the technician in charge of patient treatment can select a proper operating speed when the time period of treatment has to be considered.

BUREAU OMPI WIPO

Electron depolarization not always cancerous

Up to this point, inoperative states of the molecules by electron depolarization has been referred to cancerous state. But electron depolarization does not always represent cancer, because it also occurs in old tissue, and the current generating molecular mechanisms of the heart cells. For example, when the tissue of a young body is pinched, the molecules are compressed, and the abnormally created magnetic fields cause nerves to transmit signals to the brain, as representation of pain. But these molecular compressions are quickly expanded and rearranged into normal state, because of the normal magnetic fields that are present by the normally operating molecules. In old tissue, however, when there are many inoperative molecules, the necessary compound magnetic fields do not exist, and it takes longer time for those operating molecules to rearrange themselves to normal state. In other words, in old tissue there occurs magnetic traps of the molecular mechanisms, and whereas, in young tissue these magnetic traps do not occur.

In the case of the heart, while the voltage producing generators are connected in parallel for high current drive to the heart muscles for pumping, each generator operates individually, and therefore, when an adjacent genrator becones inoperative, the operating generator is not affected in any way. In other words, when a large number of the generators in the heart cells become inoperative, the heart still pumps, if not taxed heavily. When it is taxed hard, however, the available operating generators cannot supply the necessary current (not voltage), and thereby, becomes subject to failure. Thesee examples also relate to other types of ailments.

Practical modes of curing ailments

In view of the explanation given so far, it is seen that in different ailments the electron depolarization may be either

BUREAU OMPI WIPO

180 degrees or 90 degrees. In the case of 180 degree pole reversals, therefore, it is required that the externally applied electron-attracting field should rotate 180 degrees in at least two angular steps. In the case of 90 degree polar disorientation of the electron, however, only a singular field application from a direction right angle to the polar axis of the electron will suffice. But because of the three dimensional structure of the molecular system, the pole of the applied field must change. For example, assume that there are first, second and third pairs of oppositely poled depolarized electrons to be pole normalized. When the polar axes of these pairs of electrons are at right angles respective of each other, then the angular sequence of the applied field may be as in the following:

1- When the electron-attracting field is applied from a direction right angle to the polar axes of the first and second pairs of electrons, the poles of the first and second pairs of electrons will rotate 90 degrees - the poles of the third pair having been unaffected.

2- When the direction of the applied field is changed toward right angles to the original polar axes of the second and third pairs, one of the 90 degree rotated electrons in the first pair will further rotate to 180 degree pole reversal, and the other electron will return back to its original polar orientation. Also, the electrons in the third pair will rotate to 90 degrees. But the 90 degree pole rotated electrons of the second pair will be unaffected.

3- When the direction of the applied field is changed toward right angles to the original polar axes of the first and third pairs of electrons, one of the 90 degree pole rotated electrons in the second pair will rotate to 180 degree pole reversal, and the other electron will return

BUREAU OMPI WIPO

back to its otiginal polar orientation. The third pair of electrons will not be affected.

4- When the direction of the applied field is changed toward right angles to the original polar axes of the first and second pairs of electrons, one of the 90 degree pole rotated electrons of the third pair will rotate to 180 degree pole reversal, but the other electron will return to its original polar disorientation.

From the above given sequence of field application, it is seen that only one of the electrons in the three pairs will be 180 degree pole reversed for polar normalization, unless this sequence is repeated with pole reversal of the field application. Therefore, the basic novelty of the present invention is not only directed to a particular sequence of field application, but to an order of angular change of the applied field that will effect electron polar normalization of all of the depolarized electrons in three dimensionally arrayed molecular mechanisms in the tissue matter. These examples strongly differentiate between the conditions of performing a 180 degree pole reversal of a functional electron between a pair of atoms, and causing "nuclear magnetic resonance" of nucleons or protons in an atom. That is, the functional electron between a pair of atoms is not a constituent part of an atom, and therefore, the normal polar orientation of the electron can be reversed 180 degrees. Whereas, the nucleons, or the protons, are constituent parts of an atom, and the polar orientations cannot be reversed 180 degrees without destroying the atom, except of course, by tilting their normal polar orientations within a maximum arc of 45 degrees, for obtaining precessional resonance.

Field strength

In reference to the applied field strength for obtaining

BUREAU OMPI WIPO INTERNATIONAL

electron polar normalization, it had been described in the foregoing that polar normalization can be achieved by regenerative act of the RNA source. Therefore, all that is necessary to start this regeneration by an externally applied electron-attracting field, during a pulse period. When this field is electric, using high frequency rectified diathermy radiation, the presently standardized power limits for diathermy application can be suitable for incorporation with the presently disclosed system. But in diathermy practice, especially in microwave radiation, the radiation penetration differs in accordance with the body size, and also age of the body. Thus, it is usual that the patient is asked whether the intensity of the heat felt is tolerable. For this reason, the generator of the field is made widely variable, and the intensity of the field is varied by the technician according to the tolerance of the generated heat. Then again, while the radiation of field can be continuous, if so desired, it is preferable herein, that the field rotation is produced by sampled segments of the rotation, so that recovery time is allowed between the quiescent intervals of the samples that could have interferred (slightly) with the normal operation of the normally operating molecular mechanisms. By further reason, therefore, the internal heat generated by the sampled radiation is much less than when the radiation is continuous. Thus, when the patient has indicated any feeling of heat, it means that the process of electron polar normalization is already proceeding.

Regimen of treatment

In the foregoing I had described the approximate speed in which electron re-polarization can be established. Also in the foregoing, I had described that in the case of cancerous growth, the curing effect occurs from the periphery to the center of the mass. Thus, in the case of a large tumor,

BUREAU OMPI WIPO

in an advanced stage, it may take several hours of treatment, or up to twenty four hours in an extreme case, for complete recession of the growth. Whereas in other types of ailments, where growth is not associated with, the desired cure may be obtained in less than a minute, in the area that the field is applied. Accordingly, the length of treatmentis prejudged by the examining physician, who has acquired knowledge and understanding of the basic principles of molecular operation of the living tissue.

Brief description of the drawings

Fig. 1 shows how the output of a diathermy generator can be rectified prior to application to the pair of applicator electrodes. Fig. 2 shows a pair of inductive electrodes, which may replace the capacitive electrodes used in the arrangement of Fig. 1. Fig. 3 shows a modified arrangement of Fig. 1, utilizing three pairs of applicator electrodes, and a distributor arrangement therefor, for producing rotating field in three planes approximately at right angles respective of each other at a central area where the ailing body is placed for electron polar normalization. Fig. 4 is a detailed arrangement of the distributor system of Fig. 3. And Fig. 5 is a further modification of the R.F. rectification by amplitude modulating the output of the generator into periodic envelopes.

Best mode of carrying out the invention

As described in the foregoing, the electron pole-attracting field passing through the body is generated between three pairs of electrodes. One way of generating a static field between these pairs of electrodes is to apply a high frequency rectified electrical wave across these pairs of electrodes, because the speed in which the polar orientation of the functional electron can be changed is not faster than one eighth of a second, and therefore, the electron acts as a bypass to the high frequency half waves.

BUREAU OMPI WIPO INTERNATIONAL

Such a scheme may be exemplified by the arrangement shown in Fig. 1, wherein the block 1 represents a generator of radio frequency waves in the primary coil L1, which is coupled to L2 inductively. The alternating voltage across L2 is rectified by the diode D1, across the load resistor R1. The rectified voltage (half wave or full wave) across R1 is then applied to the spaced parallel electrodes 2 and 3, between which is placed the body to be treated. The only difference between this arrangement and of conventional diathermy arrangement is that the high frequency electric field traversing the body between the two plates 2 and 3 is in single polarity,instead of being in alternating polarity.Instead of using air spaced plate applicators 2 and 3, inductive applicators 5 and 6 may also be used, such as shown in Fig. 2. The diode Da may be used to eliminate voltage reversal across the coils. While the frequency of application in the generator of Fig. 1 is not critical, the practice of diathermy has shown that the 13.56 megahertz band serves adequately for pads and inductive applicators, but unsatisfactory for air-spaced plate applicators, because the associated high ractance requires excessive patient-circuit voltage. Whereas, the 27.12 megahertz band effectively operates all known types of applicators. Similarly, the 40.68 megahertz band is usually unsatisfactory for inductive applicators because of high dielectric losses. Thus, the use of voltage rectified diathermy may be utilized in the same manner as used in standard practice of diathermy.

In a more advanced form of rectified-voltage diathermy application, the applicators are more complex, as shown in Fig. 3. In this arrangement, the R*F generator in block 7 applies alternating wave to the controllably switched full-wave rectifiers in blocks 8, 9 and 10, the outputs of which are connected to the pairs of electrodes 11, 12; 13, 14; and 15, 16. The physical orientations of these pairs of electrodes are such that, the traversing

BUREAU OMPI WIPO INTERNATIONAL

direction of the field generated between each pair of electrodes crosses the traversing direction of the fields generated between the other two pairs at right angles. If we term this crossing point as the area e in which depolarized electrons are to be repolarized to their normal polar orientations, then the switchings of the rectified R-F voltages to the three pairs of plates can be prearranged to obtain the desired effects. The switchings are provided by the distributor in block 17, the outputs of which are coupled to the controlling inputs of the full-wave rectifiers in blocks 8-10 in prearranged sequence and combinations. In such an arrangement, the body of the patient is placed on the rack (table) 18, and positioned so that the ailing area is coincident with the area e, and the rotating field will normalize the pole disoriented electrons in the tissue for obtaining cure of the ailment.

The block arrangement of Fig. 3 is shown in partly schematic assembly of Fig. 4, wherein the R-F generator is represented by the block 19, which has three outputs consisting of inductances L3, L5 and L7. These inductances are inductively coupled to the secondary inductances L4, L6 and L8, respectively. The R-F alternating voltage across coils L4, L6 and L8 are full wave rectified by the NPN and PNP transistors Q1, Q2; Q3, Q4; and Q5, Q6. in series with the load resistors R1, R2 and R3, respectively. The series connected diodes D2 through D7 with the transistors Q1 through Q6, respectively, are for the purpose of isolating the transistors from receiving reverse voltages from the inductances L4, L6 and L8. The rectified voltages across the load resitors R1, R2 and R3 are coupled to the applicator pairs of plates 11, 12; 13, 14; and 15, 16, respectively.

The NPN and PNP transistors Q1 through Q6 are used as controlled rectifiers, and the complex control signals

BUREAU OMPI WIPO INTERNATIONAL

to their inputs are received from the outputs of mixer OR-gates in blocks 20 through 25, respectively. The complex control signals to these transistors are then supplied by the distributor outputs in block 17, which is operated sequentially by the input pulses, as indicated, and the frequency of which may for the presently proposed system be four sequential operations of the distributor, but of course, it is not a limitation of performance.

In operation, the coils L4, L6 and L8 receive R-F alternating sine wave from the generator in block 19. The base electrodes of transistors Q1 through Q6 are normally reverse biased, so that they are normally non-conductive. When the distributor in block 17 starts operating sequentially by the input pulses, as indicated, the base electrodes of transistors Q1 through Q6 start receiving forward biases by way of their associated mixer OR-gates 21, 23 and 25, in predetermined combinations, and according to the operations of the NPN and PNP transistors, the rectified voltages across the output resistors become either positive or negative, which are distributed to the pairs of applicator electrodes 11 through 15 in predetermined sequence, and combinations. As an example, these combinations, and sequences, may be as in the following:

As numbered in the distributor sequential outputs, the number 1 output renders the Q1 conductive, so that the pair of plates 11 and 12 generate a field through the body for treatment, and those disoriented electrons in the body that are 45 degree angle with respect to the transverse field dimension between the two plates, are tilted to 45 degree rotation. The number 2 output operates the Q1 and Q3 simultaneously, so that both pairs 11, 12 and 13, 14 generate the fields between them, and the 45 degree shifted electrons are further rotated to 90 degrees,

BUREAU OMPI WIPO INTERNATIONAL

in horizontal dimension. At the same time, of course, other pole-disoriented electrons in the same plane, which had not been pole reoriented, or partly reoriented, during the first pole shifting step, are also oriented in the same order. In the number 3 output, only the Q3 is operated, so that those electrons which have been pole oriented to 90 degrees, now shift to 135 degrees. In the number 4 output, the Q2 and Q3 operate simultaneously, so that the two pairs of electrodes 11, 12 and 13, 14 generate simultaneous fields (in opposite polarity with respect to the original polar disorientation of the electrons under pole-shifting operations) between them for final shifting of the 135 degree pole-shifted electrons to 180 degrees, thus establishing polar normalization of some of the pole disoriented electrons in one particular plane. By continuing this given sequence and combination of operations, it is seen that complete three dimensional rotations of three dimensionally arrayed pole-disoriented electrons in the ailing tissue can be accomplished by the sequential output operations of the distributor in block 17 - some of the connections of these combinations having been shown in Fig. 4. As mentioned in the foregoing, however, the sequence of operation of the distributor, shown in Fig. 4, is only exemplary, and instead of 45 degree steps of angular shiftings of the pole disoriented electrons, the required 180 degree rotations can also be accomplished by only two 90 degree angular steps, by energizing the pair of electrodes 11 and 12 in the first step, and energizing the pair 13 and 14 in the second step, for obtaining 180 degree field rotations in a first plane; energizing the pairs 11, 12 and 15, 16 in two steps for 180 degree field rotation in a second plane; and energizing the two pairs 13, 14 and 14, 16 in two steps for 180 degree field rotation in a third plane. Thus, the complexity of operation depends on how simple it may be desired to build and operate the apparatus for routine practice.

BUREAU OMPI WIPO INTERNATIONAL

As mentioned in the foregoing, both the pole disorientation and the pole reorientation of molecular mechanisms are established by regeneratively amplified magnetic and electric energies resulting from mutually controlled operational interrelationships between the adjacent molecular mechaisms. Thus, all that is necessary, is to start a polarization motion by an externally applied field, and let them complete the polarization act by self regeneration, by periodic application of the rectified electric field. This periodicity can be obtained by pulsating the R-F generator outputs of block 1 in Fig. 1. Such periodicity (pulsation) of operation is also desirable to be used with the arrangement of Fig. 4, so that any field interference that the normal operation of molecular mechanisms that may have received during pulsed field application, will have time enough to readjust themselves during the quiescent intervals. The waveshape of the pulsation of the R-F generators 1 and 19 in Figs. 1 and 4 is not important, except that gradual rise and fall at the edges of the wave is desirable for many reasons, for example, radio frequency interference in space. One practical arrangement is shown in Fig. 5.

In Fig. 5, a modulating sine wave at a desired pulsating frequency is genrated in block 30, the output of which is applied to the half wave rectifier in block 31, and also to the pulse-former in block 29. The pulses of block 29 are used to operate the distributor in block 17, which represents the same distributor 17 of Fig. 4. The output of R-F generator in block 19 is applied to the amplitude modulator in block 32 for amplitude modulation of the R-F generation. The output of the modulator 32 now represents the output of the R-F generator of block 19 in Fig. 4, or the block 1 in Fig. 1, which as described in the foregoing, is applied to the coils L3, L5 and L7. In such an arrangement, the operational performance is self explanatory. For example, the modulation wave of block 30 is shown next to the block; the

BUREAU OMPI WIPO

pulses derived from the modulation wave is shown next to the block 29; the rectified wave is shown next to the block 31; and the generated R-F output is shown below the block 19. Instead of half wavem however, the R-F output of the generator may be one hundred percent amplitude modulated by a sine wave at the desired frequency, and every other modulated envelope cancelled out by leaving unconnected output terminals at every other sequential ouput of the distributor in Fig. 4. Also, in reference to the transistors Q1 through Q6, they are shown in exemplary form, as other types of semiconductors can also be used, for example, the silicon controlled rectifiers.

Having described the preferred embodiments of the present invention, and in view of the various possibilities of changes that may be made in the arrangements shown, it will be obvious to the skilled in the particular art that other modifications, adaptations, and substitutions of parts may be made without departing from the true spirit and scope of the invention, and particularly the scope that the invention embraces in practice.

BUREAU OMPI WIPO INTERNATIONAL

CLAIMS

1- The method of curing biological ailments, resulting from depolarization of functional electrons in three dimensionally arrayed molecular mechanisms of the tissue matter, by polar normalization of said electrons, the method comprising the steps of:

passing plurality of pole and direction controllable bipolar electron-attracting fields sequentially through a volume of tissue matter containing said depolarized electrons;

distributing controls for selection of poles and passage of said bipolar fields through said tissue matter; and

said distribution being in an order of sequence such that, the polar orientation of said field passing through said tissue changes successively, and with 180 degree polar reversals, in plurality of angular directions within three mutually perpendicular planes, ror effecting polar normalization of said depolarized electrons, and thereby obtaining the cure aforesaid.

2- The method of curing biological ailments, resulting from depolarization of functional electrons in three dimensionally arrayed molecular mechanisms of the tissue matter, by polar normalization of said electrons, the method comprising the steps of:

producing first, second and third controllable bipolar electron-attracting fields through a volume of tissue matter, from directions such that, the said fields cross from angles mutually perpendicular at said volume of tissue matter;

distributing controls for selection of poles and productions of said fields; and

BUREAU OMPI WIPO INTERNATIONAL

said distribution of controls being in an order of sequence such that, the polar orientation of the crossing field through said volume of tissue changes successively, and with 180 degree polar reversals, in plurality of directions within three mutually perpendicular planes, for effecting polar normalization of said depolarized electrons, and thereby obtaining the cure aforesaid.

3- The method of curing biological ailments, resulting from depolarization of functional electrons in three dimensionally arrayed molecular mechanisms of the tissue matter, by polar normalization of said electrons, the method comprising the steps of:

generating electrical waves into individual envelopes;

rectifying the high frequency waves in said individual envelopes in an order such that, the rectified high frequency waves in the individual envelopes are alternately in opposite poles;

controllably radiating through space said oppositely poled rectified waves in said individual envelopes to a central space area, from first, second and third angular directions, in an order such that, the fields of radiations of said envelopes of rectified waves from said first, second and third directions cross each other mutually perpendicular at said central space area;

placing a volune of tissue matter containing said depolarized electrons at said central space area, for passage of said first, second and third fields therethrough;

distributing controls for selecting the poles and radiations of said rectified waves from said first, second and third directions; and

said distribution of controls being in an order of selection and sequence such that, the polar orientation of the radiated field passing through said volume of tissue

BUREAU OMPI WIPO INTERNATIONAL

changes successively, with 180 degree pole reversals, in plurality of angular directions within three mutually perpendicular planes, for effecting polar normalization of said depolarized electrons, and thereby obtaining the cure aforesaid.

4- The method as set forth in claims 1 to 3, wherein the sequence of said distribution is such that, the said changes of angular orientation of the field at said central area occurs in plurality of 180 degree polar rotations in successive 90 degree angular steps.

5- Apparatus for curing biological ailments, resulting from depolarization of functional electrons in three dimensionally arrayed molecular mechanisms of the tissue matter, by polar normalization of said electrons, the apparatus comprising:

first, second and third pairs of spaced parallel electrodes, the said pairs being oriented relative to each other in an order such that, when said pairs are energized electrically the traversing fields between said pairs will cross each other's fields at right angles, at a common central space area, where an area of said ailment is placed;

a high frequency electrical wave generator;

first, second and third pairs of controlled rectifier means interconnecting the genrator, and the first, second and third pairs of electrodes, respectively, each rectifier means having a respective control means;

first, second and third pairs of switching means, each pair having a plurality of inputs and a pair of outputs connected to a respective pair of the rectifier control means;

BUREAU OMPI WIPO INTERNATIONAL

means operable to distribute successive switching signals selectively to the switching means for selective energization of the pairs of said electrodes; and

said distribution means having a plurality of outputs connected to the inputs of the switching means in a sequence such that, the polar orientation of the traversing field at said space area changes successively, and with 180 degree polar reversals, in plurality of angular directions within three perpendicular planes, for effecting polar normalization of said depolarized electrons, and thereby obtaining the cure aforesaid.

6- Apparatus for curing biological ailments, resulting from depolarization of functional electrons in three dimensionally arrayed molecular mechanisms of the tissue matter, by polar normalization of said electrons, the apparatus comprising:

first, second and third pairs of spaced parallel electrodes, the said pairs being oriented respective of each other in an order such that, when said pairs are energized electrically the traversing fields between said pairs will cross each other's fields at right angles at a common space area;

a high frequency electrical wave generator having first, second and third outputs;

first, second and third bipolar rectifiers, each rectifier having a pair of control electrodes, respectively, for controlling bipolar conductance therethrough;

couplings from said first, second and third outputs of said generator to said first, second and third pairs of spaced electrodes in series with said first, second and third bipolar rectifiers, for allowing admittance of either positive or negative rectified waves to last said electrodes;

BUREAU OMPI WIPO INTERNATIONAL

first, second and third pairs of mixer means, each pair of mixer means having plurality of inputs and a pair of outputs, respectively;

couplings from the pairs of outputs of said first, second and third pairs of mixer means to the pairs of control electrodes of said first, second and third rectifier means, respectively, for operation;

a distributor means having plurality of outputs; and

plurality of combinations of couplings from the outputs of said distributor to the plurality of said pairs of mixer means, for operation of said first, second and third bipolar rectifiers, whereby allowing energization of said first, second and third pairs of electrodes in a sequence, such that, the polar orientation of the traversing field at said central area changes successively, and with 180 degree pole reversals, in plurality of angular directions within three mutually perpendicular planes, so that when an ailing area of tissue matter containing depolarized electrons, said depolarizations will be normalized for otaining the cure aforesaid.

7- The apparatus as set forth in claims 5 and 6, wherein the sequence of said distribution is such that, the said changes of angular orientation of the field at said central area occurs in plurality of 180 degree polar rotations in successive 90 degree angular steps.

8- Apparatus for curing biological ailments in tissue matter, the apparatus being substantially as hereinbefore described with reference to, and as illustrated by, the accompanying drawings.

BUREAU OMPI WIPO INTERNATIONAL

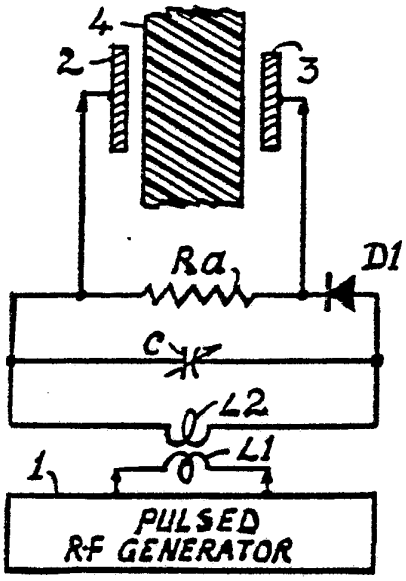

Fig. 1

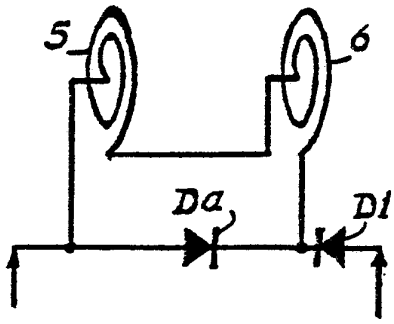

Fig. 2

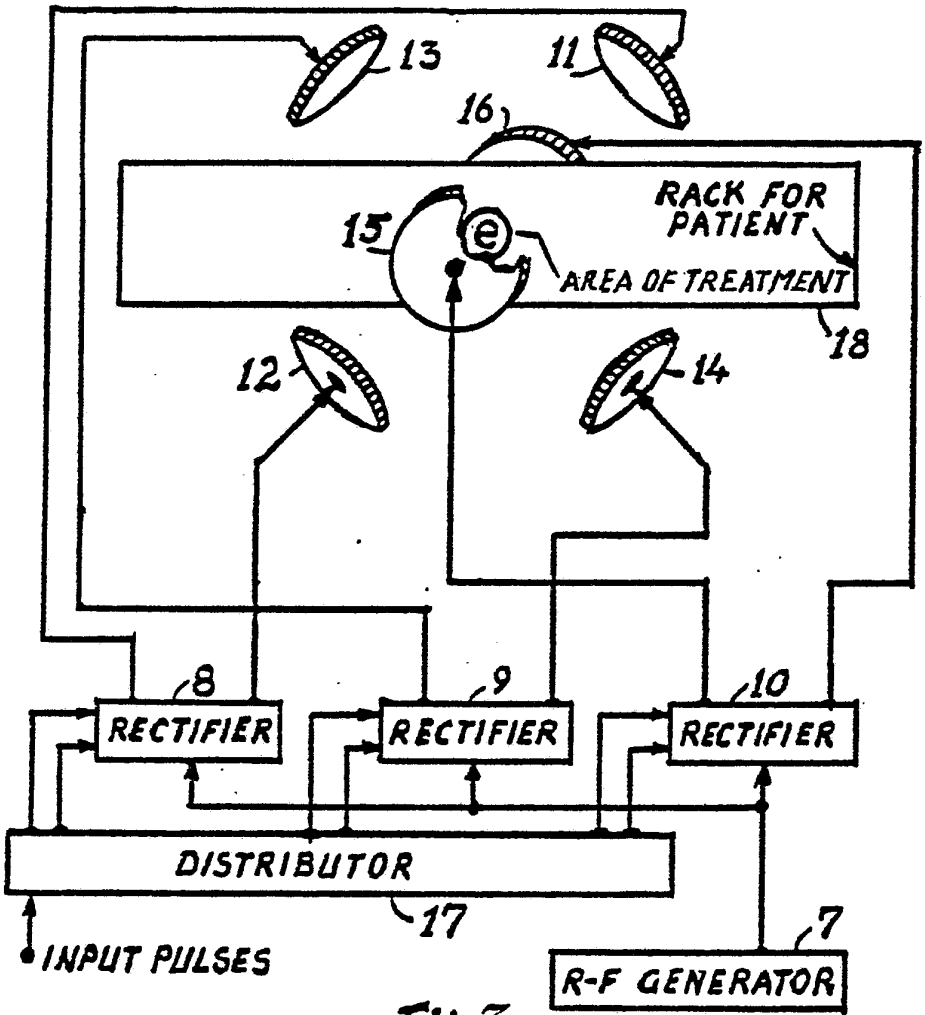

Fig. 3

BUREAU OMPI WIPO INTERNATIONAL

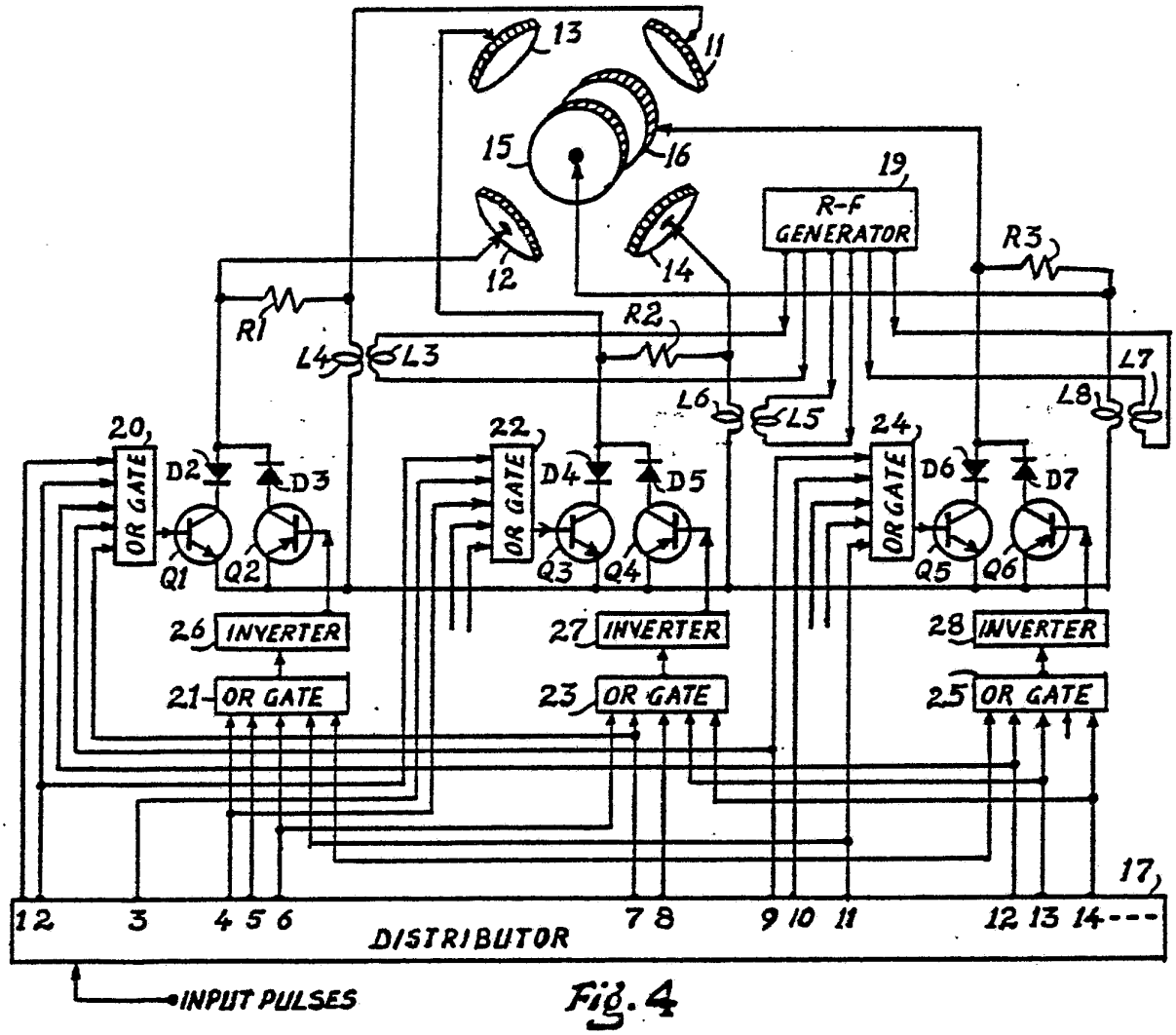

Fig. 4

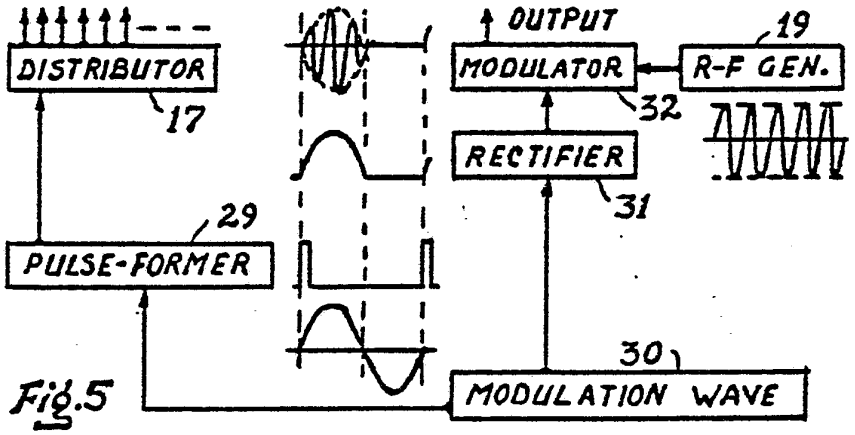

Fig. 5

BUREAU OMPI WIPO INTERNATIONAL

INTERNATIONAL SEARCH REPORT

International Application No PCT/US81/01574

I. CLASSIFICATION OF SUBJECT MATTER (if several classification symbols apply, indicate all) [3]

According to International Patent Classification (IPC) or to both National Classification and IPC

IPC[3]: A61N 1/00

US. Cl: 128

II. FIELDS SEARCHED

Minimum Documentation Searched [4]

Classification System	Classification Symbols
U.S.	128/1.3,1.5,419R,420A,420R,421,422,423

Documentation Searched other than Minimum Documentation to the Extent that such Documents are Included in the Fields Searched [5]

III. DOCUMENTS CONSIDERED TO BE RELEVANT [14]

Category *	Citation of Document, [16] with indication, where appropriate, of the relevant passages [17]	Relevant to Claim No. [18]
A	US,A, 4,095,588, Published 20 June 1978 GOLDMAN ET AL	1-8
A	FR,A1, 2,252,107, Published 20 June 1975	1-8

* Special categories of cited documents: [15]

"A" document defining the general state of the art

"E" earlier document but published on or after the international filing date

"L" document cited for special reason other than those referred to in the other categories

"O" document referring to an oral disclosure, use, exhibition or other means

"P" document published prior to the international filing date but on or after the priority date claimed

"T" later document published on or after the international filing date or priority date and not in conflict with the application, but cited to understand the principle or theory underlying the invention

"X" document of particular relevance

IV. CERTIFICATION

Date of the Actual Completion of the International Search [2]	Date of Mailing of this International Search Report [2]
23 February 1982	09 MAR 1982
International Searching Authority [1]	**Signature of Authorized Officer [20]**
ISA/US	F. Jaworski

Form PCT/ISA/210 (second sheet) (October 1977)