June 6, 1967 P. W. CARSTEN 3,324,257

PROGRAMMER

Filed June 22, 1965 2 Sheets-Sheet 1

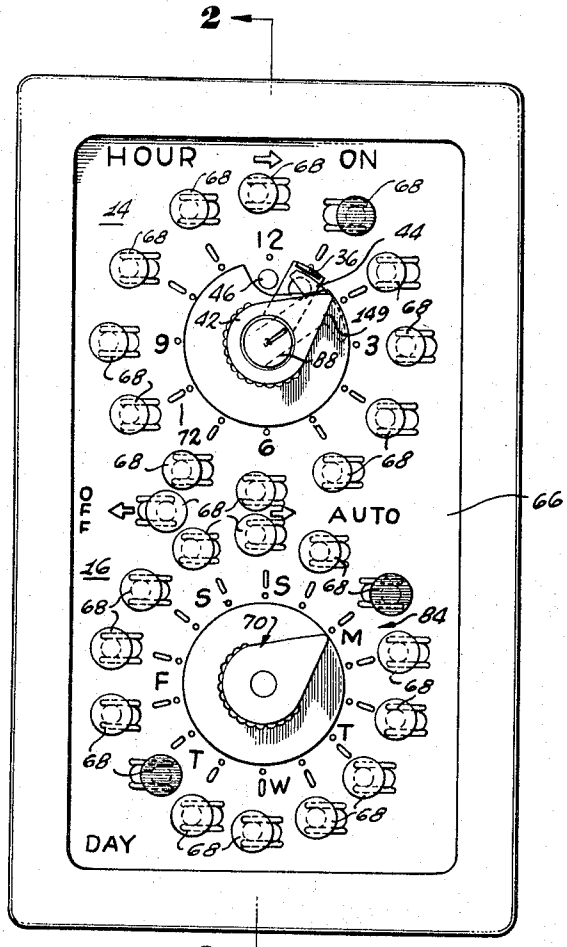

Fig. 1

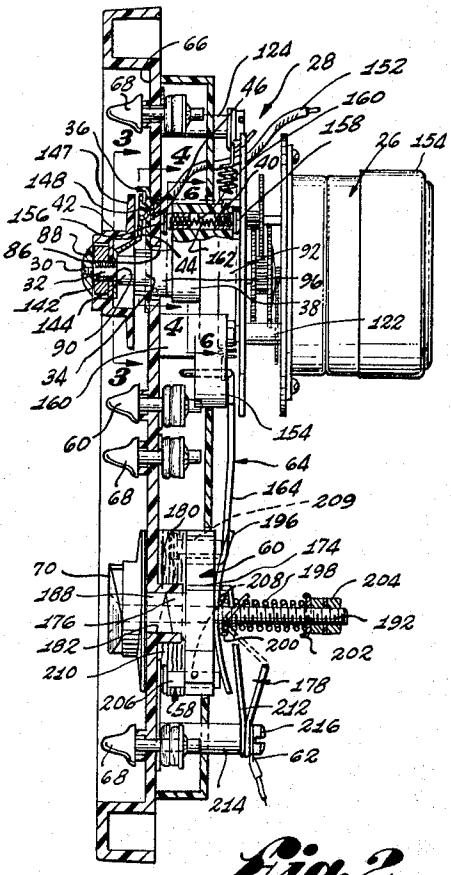

Fig. 2

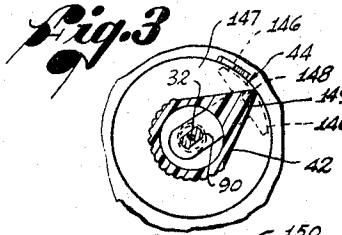

Fig. 3

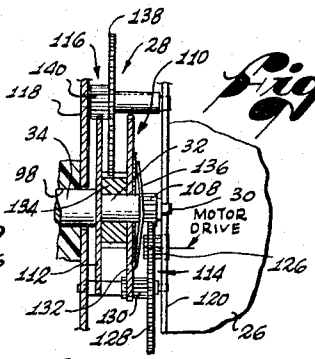

Fig. 5

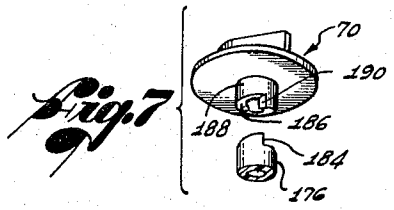

Fig. 7

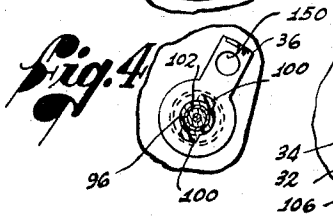

Fig. 4

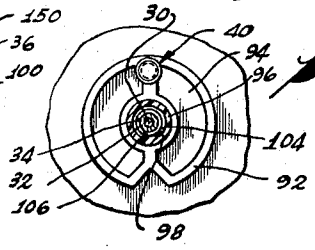

Fig. 6

INVENTOR.
PAUL W. CARSTEN
BY Fulwider, Patton, Rieber Lee, and Utecht
ATTORNEYS

June 6, 1967 P. W. CARSTEN 3,324,257

PROGRAMMER

Filed June 22, 1965 2 Sheets-Sheet 2

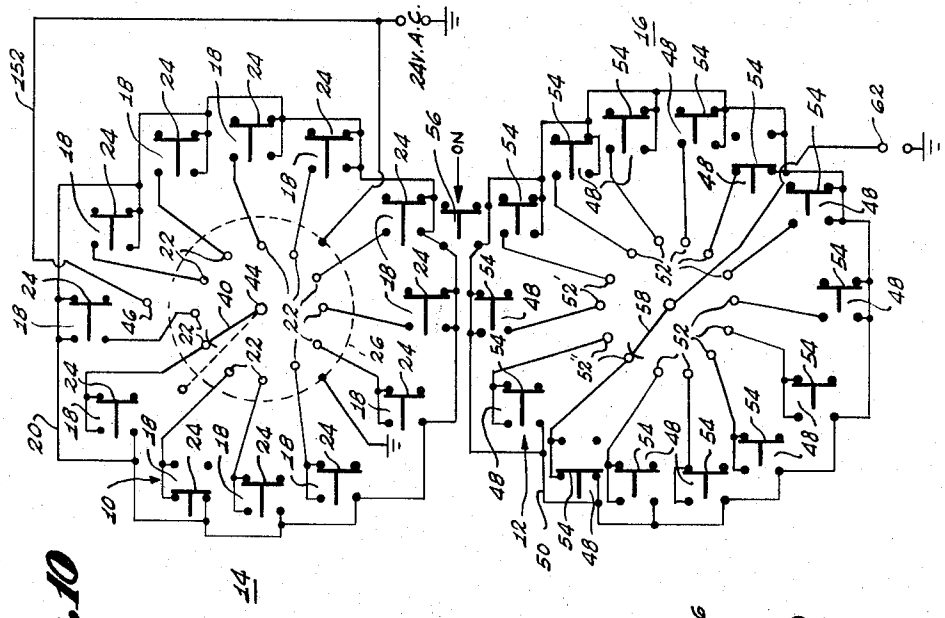

Fig. 10

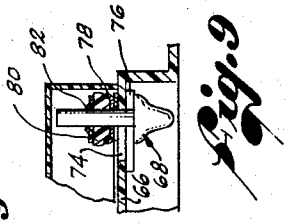

Fig. 9

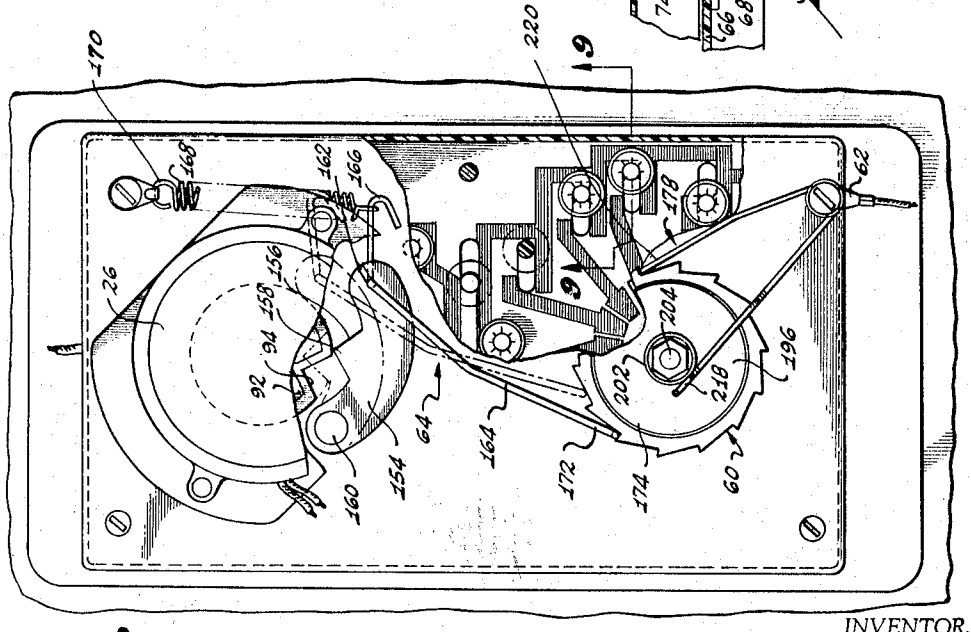

Fig. 8

INVENTOR.
PAUL W. CARSTEN
BY Fulwider, Patton, Rieber, Lee, and Utecht
ATTORNEYS

United States Patent Office 3,324,257 Patented June 6, 1967

3,324,257

PROGRAMMER

Paul W. Carsten, P.O. Box 428, Malibu, Calif. 90265

Filed June 22, 1965, Ser. No. 465,889
16 Claims. (Cl. 200—37)

The present invention relates to automatic starters for electrical apparatus and, more particularly, to a programmer, ideally suited to use in an automatic lawn-sprinkling system, for automatically starting electrically controlled apparatus at predetermined and controllable times.

Automatic lawn-sprinkling systems generally include a timer device for automatically timing the sequential operation of different electrically controlled valves, and a programmer for starting the timer at predetermined and controllable times during each day.

The conventional form of programmer includes a metal disk connected to the drive shaft of a constant speed motor. The disk includes a circular array of holes, one for each fifteen minutes of the day. A stationary switch is mounted behind the disk and connected in series with an electrical power source and an output terminal for connection to the timer associated with the programmer. The holes in the disk are adapted to receive metal pins or screws for closing the switch as they are carried into contact therewith upon a turning of the disk by the motor.

The motor turns the disk through one complete revolution in twenty-four hours. Thus, the disk turns very slowly to move the pins or screws into and out of engagement with the switch. In fact, in actual practice, each pin effects about a twenty minute closure of the switch to supply a starting signal to the associated timer.

Unfortunately, the twenty minute closure may be longer than the scheduled operating time of the timer. In such a circumstance the long duration starting signal is still applied to the timer at the end of its scheduled operation and causes an undesired recycling of the timer. Thus, conventional programmers pose a limitation upon the minimum operating time which may be scheduled for the timer.

In addition to the problem of possible timer recycling, conventional programmers also labor under numerous mechanical problems. For example, unless the holes in the disk are of exactly the right size, either a too loose or too tight fit is provided for the switch contacting pins. If the fit is too tight, it is difficult to insert the pins into the holes. If the fit is too loose, it is possible that the swich may force the pins from the hole or at least away from the switch upon contact such that the switch will open too soon or not close at all.

Corrosion between the disk and the pins or screw is another serious problem particularly when the pins or screws are left in the holes and exposed to the atmosphere and environmental conditions commonly surrounding automatic lawn-sprinkler systems.

Also, in conventional programmers, it is possible that a particular hole for receiving a pin is aligned with the switch at the time of setting the programmer. Under such conditions, the insertion of the pin may bend the movable arm of the switch such that it will not make the desired contact with the pins.

Conventional programmers are also rather inconvenient to preset. In particular, it is time consuming and tedious to carefully insert pins or screws into relatively small holes in a disk. Also, to preset the disk in a rotational position corresponding to the particular hour of the day requires the loosening of a screw connecting the disk to the end of the motor drive shaft. After exposure to the elements, the screw often becomes rusted and difficult to turn. Therefore, it is not uncommon that tools, such as wrenches and the like, are required to

loosen the screw. This, of course, always presents the possibility of improper turning of the screw in the wrong direction to further tighten the screw in place.

In addition to the foregoing problems, conventional programmers are heavy and bulky and relatively expensive.

In view of the foregoing, it is a general object of the present invention to provide an improved programmer for automatically starting electrically controlled apparatus, which overcomes the problems of conventional programmers and particularly those employed in automatic lawn-sprinkling systems.

It is another object of the present invention to provide such an improved programmer which is capable of programming the operation of electrically controlled apparatus for an entire week.

A further object of the present invention is to provide an improved programmer for developing electrical starting signals of relatively short duration to automatically start electrically controlled apparatus at predetermined and controllable times.

Still another object of the present invention is to provide an improved programmer of the foregoing type which is simple in design, lightweight, relatively inexpensive, rust resistant, and reliable in its operation.

The foregoing as well as other objects and advantages of the present invention may be more clearly understood by reference to the following detailed description when taken with the drawings which, by way of example only, illustrate one form of programmer embodying the features of the present invention.

In the drawings:

FIGURE 1 is a front view of the programmer;

FIGURE 2 is a sectional side view of the programmer taken along the line **2—2** in FIGURE 1;

FIGURE 3 is a fragmentary sectional view taken along the line **3—3** in FIGURE 2;

FIGURE 4 is a fragmentary sectional view taken along the line **4—4** in FIGURE 2;

FIGURE 5 is a fragmentary sectional side view of a portion of FIGURE 2 illustrating the clock gearworks of the programmer;

FIGURE 6 is a fragmentary sectional view taken along the line **6—6** in FIGURE 2;

FIGURE 7 is a fragmentary perspective view of a dial and portion of a shaft for the day program section of the programmer;

FIGURE 8 is a back view of the programmer with portions broken away to illustrate the inner construction of the drive arrangement of the programmer;

FIGURE 9 is a fragmentary sectional view taken along the line **9—9** in FIGURE 8; and

FIGURE 10 is a wiring diagram of the programmer.

The over-all arrangement of the programmer, as well as its operation, is most readily understood by reference to the wiring diagram of FIGURE 10. In general, the programmer includes two circular arrays of normally open switches. The upper array is represented by the numeral **10** and the lower array by the numeral **12**. The upper array **10** forms in integral part of an hour of day section **14** for the programmer while the lower array **12** forms an integral part of the programmer's day of week section **16**.

The upper array **10** includes a plurality of normally open switches **18**, one for each hour of the day. The switches are arranged in a circle and are connected to a common lead **20** and each to a different one of a plurality of stationary contacts **22**, also arranged in an evenly spaced circular array. Each switch **18** includes a movable switch arm **24** which may be manually moved from side to side to selectively open and close the switch.

Generally speaking, the hour section **14** of the pro-

grammer resembles a clock, both in outward appearance and in operation, and, to this end, includes a constant speed drive motor **26** connected to a clock gear work **28** including coaxial, second hand, minute hand and hour hand drive shafts **30**, **32** and **34** (see FIGURES 2 and 5). The hour hand drive shaft **34** carries a plastic hour hand **36** visible from the front of the programmer, and a plastic support member **38** for a movable electric contact **40**. Thus arranged, the movable contact **40** turns slowly with the hour hand drive shaft **34** to successively engage the plurality of stationary contacts **22** at one hour intervals. Therefore, each different stationary contact **22** may be associated with a different hour of the day and referred to as an hour contact, such as the one o'clock contact, the two o'clock contact, and so on. Corresponding terminology may be applied to the switches **18** connected to the contacts **22** which may be referred to as hour switches, such as the one o'clock switch, the two o'clock switch, and so on.

The minute hand drive shaft **32** carries a plastic minute dial **42**, visible from the front of the programmer and an electrical switch arm **44** for moving together with rotation of the minute shaft. The minute dial **42** and switch arm **44** are related to the hour hand **36** and movable contact **40** such that they make one complete revolution while the movable contact moves between successive hour contacts **22**.

Once each revolution of the switch arm **44**, it engages an input terminal **46** connected to an electrical power source, here a 24-volt A.C. supply. Preferably, input terminal **46** is stationed at 12 o'clock such that the switch arm **44** engages the input terminal to momentarily supply electrical power to the hour section **14** when the movable contact **40** successively engages the hour contacts **22**.

The circuit arrangement for the day section **16** of the programmer is somewhat similar to the hour section **14**. In particular, the lower array **12** includes fourteen normally open switches **48** connected to a common lead **50** and each to a different one of a plurality of evenly spaced stationary contacts **52** arranged in a circle within the lower array. Each of the switches **48** includes a movable switch arm **54** which may be manually moved from side to side to selectively open and close the switch.

In the lower array **12**, the switches **48** and the stationary contacts **52** are grouped in pairs, each corresponding to a different day of the week. For example, that stationary contacts **52'** and **52''** are associated with and denoted as Sunday a.m. and Sunday p.m. contacts, respectively, and successive pairs of stationary contacts, in a clockwise direction around the array, associated with and denoted as Monday a.m. and Monday p.m. contacts, Tuesday a.m. and Tuesday p.m. contacts, and so on. In a like manner the switches **48** connected to the contacts **52** may be considered as Sunday a.m. and Sunday p.m. switches, Monday a.m. and Monday p.m. switches and so on.

To complete the electrical circuitry of the programmer, a control switch **56** is connected between the common leads **20** and **50** of the hour and day sections **14** and **16**, and the day section includes a movable contact **58** carried by a plastic support member **60** for turning in a circular path to successively engage different ones of the day contacts **52**. The movable contact **58** is electrically connected to an output terminal **62**.

The operation of the day section **16** of the programmer is under the control of a drive mechanism **64** (see FIGURES 2 and 8). Generally speaking, the drive mechanism **64** is adapted to move the movable contact **58** between successive day contacts once each complete revolution of the movable contact **40**. That is, once each twelve hours, and preferably at 12 o'clock midnight and 12 o'clock noon, when the switch arm **44** is engaging the input terminal **46**.

To schedule and start the programmer, the operator first determines the hours of the day and days of the week he wishes a particular electrically controlled apparatus to be started. He then closes the corresponding hour and day switches and manually sets the hour hand **36** and minute dial **42** to correspond to the actual time of day, much as he would an ordinary clock. The operator then closes the control switch to set the programmer into automatic operation.

In operation, the switch arm **44** rotates with the minute dial **42** to engage the input terminal on each hour. The movable contact **40** moves with the hour drive shaft to successively engage the hour contacts **22**. Once each complete revolution of the contact **40**, and preferably just before the hour, the drive mechanism **64** moves the movable contact **58** between successive day contacts **52**. When the movable contact **40** engages an hour contact **22** associated with a closed hour switch **18** and the switch arm **44** engages the input terminal **46**, an electrical circuit is completed from the source through the switch arm, movable contact, and the closed hour switch to the control switch **56**. If the movable contact **58** is engaging a day contact **52** associated with a closed day switch **48**, an electrical circuit is completed through the closed day switch, the movable contact **58** to the output terminal **62** to supply electrical power therto for the time the switch arm is in contact with the input terminal. By controlling the size of the switch arm **44** and the input terminal **46**, the duration of the output signal may be controlled to be just sufficient to start the electrically controlled apparatus connected to the output terminal. When the output terminal **62** is connected to a timer, such as that described in the copending patent application entitled "Timer," Ser. No. 465,958, filed on even date herewith, an output signal duration of about a minute is all that is required to reliably start the timer.

In the programmer of the present invention, the circuit just described is carried on the back of a front panel **66** adapted for mounting in a wall to station the programmer within easy reach of its operator. Preferably the front panel **66** is formed of an insulating material such as plastic and the circuit is formed by plating the back of the front panel with a metal, such as copper, chrome or nickel, and then etching off all but the portions required to form the desired printed circuit. In this manner the front panel acts as the base of the printed circuit and reduces the over-all cost of the programmer.

The front panel **66** also carries the controls for manually setting the programmer to produce starting signals at predetermined hours of predetermined days. The controls include a plurality of slidable, plastic, pins **68**, one for each switch arm of the switches (**18**, **48**, **56**) of the programmer, the hour hand **36**, the minute dial **42**, and a plastic, day of week dial **70**.

As represented most clearly in FIGURE 1, the arrangement of the controls on the front panel **66** for both the hour and day sections of the programmer somewhat resembles the front of a clock face. In particular, for the hour section **14**, the front panel **66** carries a scale **72** around the minute dial **42** divided into five minute or hour increments, similar to an ordinary clock face. The pins **68** for the hour section **14** are arranged in a circular array around the scale **72** in general radial alignment with the five minute or hour indications of the scale. Each pin is connected to the movable switch arm **24** of a corresponding hour switch **18** to open and close the switch with manual sliding movement of the pin. Thus, the pin at the 12 o'clock indication is connected to the switch arm for the 12 o'clock switch **18**, the pin at the 1 o'clock indication to the movable switch arm for the 1 o'clock switch, and so on.

As illustrated most clearly in FIGURE 9, the head of each pin **68** is shaped for easy grasping between the fingers of the operator with the shank of the pin passing through horizontal elongated slot **74** in the front panel **66**. With hand movement, the head of the pin rides over a pair of parallel rails **76** extending from the front panel **66** on either sides of its associated slot **74**. Behind the

front panel, the pin passes through a metal cup-shaped washer 78 forming the movable switch arm for the associated switch, a rubber washer 80, and a metal push nut 82. The push nut 82 resembles a small metal washer having a plurality of spaced radial cuts around its central opening to accommodate a pin of larger size than the central opening and to tightly engage the shank of the pin. The push nut compresses the washer 80 against the switch arm to force the switch arm tightly against the back of the front panel 66 thereby insuring good electrical contact between the switch arm and the printed circuit with movement of the switch arm.

As previously indicated, the hour hand 36 and minute dial 42 for the hour section 14 are connected to and turn with the hour and minute drive shafts of the clock gearworks 28 similar to the hands of a conventional electric clock. In particular, during operation the hour hand 36 and minute dial 42 rotate over the face of the hour section 14 of the programmer to indicate the position of the electrical switch arm 44 and the movable contact 40. When the minute dial is pointing at the numeral 12, the switch arm 44 is engaging the input terminal 46, the hour hand 36 is pointing at the hour, and the movable contact 40 is engaging a corresponding hour contact 22. Also, both the minute dial and the hour hand may be manually moved in either a clockwise or counterclockwise direction to set the hour section 14 of the programmer to correspond to the actual hour of the day before starting its operation without damaging the gearworks 28 or motor 26.

To provide such a clock drive for the minute dial 42, hour hand 36, the movable contact 40, and switch arm 44, the drive shafts of gearworks 28 are coaxially arranged with the second shaft 32 being the inner shaft and the hour shaft 34 being the outer shaft, and extending forward from the gearworks 28 through an opening 86 in the front panel 66 centrally located within the array of pins 68. A second hand 88 is screwed to the front end of the second-hand drive shaft 30 for turning therewith. In the illustrated form of the programmer, however, the second hand 88 is not employed, but is included in the design to render the programmer adaptable to a setting where it is desired to program the generation of starting pulses at given minutes.

The forward end of the minute hand drive shaft 32 is generally rectangular in shape and is adapted for reception in a similarly shaped central opening 90 in the minute dial 42. The minute dial 42 is thus connected to and turns with the minute drive shaft over the face of the front panel 66, much as the minute hand of a clock.

The hour hand 36 is connected to rotate with the hour hand drive shaft 34 by means of the support 38 for the movable contact 40 of the hour section 14 of the programmer. The support member 38 generally takes the form of a smooth, circular cam 92 having a V-shaped notch 94 in its periphery and a collar 96 extending forward from the cam around the central opening 98 (see FIGURES 2, 4, 5, 6 and 8). The forward end of the collar 96 includes a pair of diametrically opposite rectangular ears 100 for tightly and axially receiving the hour hand 36 which includes a similar opening 102. As best seen in FIGURE 6, the central opening 98 in the cam 92 has a flat surface 104 for mating with a similar flat surface 106 on the hour drive shaft 34. Thus, the cam 92 turns with the hour drive shaft 34 to produce a turning of the hour hand 36 over the face of the front panel 66 to visually indicate the hour of the day and the position of the movable contact 40 around the circular array of hour contacts 18.

The gearworks 28 for driving the second, minute and hour-hand drive shafts is most clearly illustrated in FIGURE 5 and includes a second gear 108, a minute gear assembly 110, an hour gear 112 and two idler gear assemblies 114 and 116 journaled between forward and rear support plates 118 and 120 for the constant speed motor 26. The motor 26 is connected to the rear plate 120 which in turn is connected to the front plate 118 by a plurality of spacers 122. The front plate 118 is connected to the back of the front panel 66 by a plurality of tubular posts 124 receiving screw members (not shown) which pass through the front panel and into the posts.

The output shaft 126 of the motor 26 mates with a large gear 128 of the idler gear assembly 114 to turn the second gear 108 and second hand shaft 30. A pinion gear 130 of the idler gear assembly 114 turns with the large gear 128 to drive a relatively large gear 132 of the minute gear assembly 110. The gear 132 is supported for free rotation about the minute shaft 32 and is urged by a leaf spring 136 against a pinion gear 134 connected to the minute shaft to turn the minute shaft. The pinion gear 134 meshes with a large gear 138 of the idler gear assembly 116 to turn a pinion gear 140 which drives the hour gear 112 to turn the hour drive shaft 34. Thus, rotation of the motor drive shaft 126 produces a simultaneous rotation of the second shaft, minute shaft and hour shaft to turn the second hand, minute dial and hour hand over the face of the front panel 66 to indicate the actual time of day.

Furthermore, the loose connection of the minute gear 132 around the minute shaft 32, and the leaf spring 136 allows the minute dial 42 and hour hand 36 to be manually turned in either a clockwise or a counterclockwise direction without damaging the gear works 28 or the motor drive 26. In particular, a manual turning of the minute shaft 32 turns the pinion gear 134 to drive the hour shaft 34. The friction contact between the pinion gear 134 and large minute gear 132, however, is insufficient to drive the minute gear 132, which is connected to the motor drive shaft 126 through the idler gear assembly 114. Therefore, manual turning of the minute hand effects a turning of hour hand 36 but does not affect the motor 26.

In addition to turning the minute dial 42, the minute drive shaft 32 also turns the switch arm 44 to repeatedly engage the input terminal 46 once each revolution of the minute dial. Preferably, the switch arm 44 comprises a bent leaf spring (see FIGURE 2) has a generally rectangular opening 142 for receiving the end of the minute shaft 32. The leaf spring is captured between a shoulder 144 on the minute shaft and the minute dial 42, and extends radially outward from the minute shaft, and then rearwardly and again radially outward. At its outermost end, the leaf spring includes a pair of forwardly bent ears 146 for contacting a radial collar 147 of the minute dial 42 which presses a rearward projection 148 carried by the leaf spring tightly against the front panel 66. The projection 148 lies under the pointer 149 of the minute dial and due to the spring action of the ears remains in contact with the face of the front panel 66 except when moving over the hour hand 36. When this occurs, the projection rides over the back of the hour hand and into and out of an opening 150 in the hour hand. The opening 150 allows the projection 148 to make electrical contact with the input terminal 46 even when the hour hand 36 is indicating 12 o'clock.

More particularly, in the form of the programmer illustrated, the input terminal 46 comprises a metal terminal stationed in the front panel 66 and electrically connected by an input lead 152 to the 24-volt source. Preferably, the terminal is seated in the front panel behind the collar 147 of the minute dial 42 in line with the numeral 12. This means that the projection 148 of the switch arm 44 contacts the terminal 46 each time the minute dial rotates through one revolution and is pointing at the numeral 12. The duration of the contact depends, of course, upon the size of the projection 148 and the size of the terminal 46 and can be controlled to produce any desired time duration of contact.

When the switch arm **44** is engaging the input terminal **46**, electrical power is supplied through the switch arm to the minute hand drive shaft **32**. Current therefore flows through the gearworks **28** and the metal housing **154** surrounding the motor **26** to the front support plate **118** and hence to the movable contact **40**.

As previously indicated, the movable contact **40** is carried by the support means **38** connected to the hour drive shaft **34** to turn in a circular path and successively engage the hour contacts **22** at one hour intervals. In the illustrated form, the movable contact **40** takes the form of a pair of rivets **156** and **158** seated in a bore **160** extending axially through the cam **92** with a coil spring **162** stationed between the rivets. The spring **162** presses the rivet **158** against the forward support plate **118** and the rivet against the back of the front panel **66** to ride with the cam **92** in a circle to succesively engage the hour contacts **22**. Thus, when the rivet **156** first engages an hour contact **22**, the electrical circuit from the input terminal **46** is completed to the printed circuit on the back of the front panel and if the rivet is then engaging an hour contact associated with a closed hour switch, current flows through the closed switch to the day section **16** of the programmer. From the day section **16**, the current flows to the output terminal **62**, assuming the movable contact **58** is then contacting a day contact **52** associated with a closed day switch **48**.

In the day section **16** of the programmer, the face of the front panel **66** also resembles a clock arrangement. In particular, a scale **84** is carried by the front panel around the day dial **70** and divided into increments corresponding to a.m. and p.m. periods for the different days of the week. Letters are carried by the front panel **66** to indicate the different days, Sunday through Saturday, and various pins **68** for the day section are arranged in a circular array around the scale in general alignment with the particular days of the week. The pins are connected to the switch arms of the corresponding a.m. and p.m. day switches **48** such that movement of the pins to the right, as indicated by the arrow, closes the day switches.

The day dial **70** is adapted to turn with operation of the hour section **14** to point to the particular day contact **52** then being engaged by the movable contact **58**. In particular, the movable contact **58** is advanced between successive day contacts **52** once for each complete revolution of the hour hand **36** and movable contact **40** of the hour section **14** of the programmer. This is accomplished through the drive mechanism **64**, most clearly illustrated in FIGURES 2 and 8.

As represented, the drive mechanism **64** includes the cam **92** with its V-shaped notch **94**, as well as a plastic, arcuate cam follower **154** having a generally V-shaped projection **156** with a central angle **158** preferably greater than the central angle of the V-shaped notch. The cam follower **154** is pivotally connected by a pin **160**, extending from the back of the front panel **66**, for swinging movement toward and away from the cam **92** with the projection **156** preferably lying along a vertical radius of the cam.

The end of the cam follower **154** opposite the pin **160** includes a slot **162** for receiving a bent wire **164**. The wire **164** is free to pivot within the slot relative to the cam follower with a hooked end **166** adjacent the cam follower connected to the end of a coil spring **168**. An opposite end **170** of the coil spring **168** is connected to the back of the front panel as indicated, to produce a clockwise rotation of the wire **164** about its connection to the cam follower **154** and to continuously urge the projection **156** against the outer surface of the cam **92**.

An opposite end **172** of the wire **164** is in tangential driving engagement with a ratchet wheel **174**. The ratchet wheel **174** comprises the support **60** for the movable contact **58** of the day section **16** of the programmer and is carried by a tubular shaft **176** journaled to the front

panel **66**. The coil spring **168** causes the wire **164** to pivot about the cam follower **154**, press against the outer edge of the ratchet wheel **174**, and to move with the cam follower toward and away from the cam **92** with movement of the projection **156** into and out of the notch **94**.

This movement is illustrated in FIGURE 8 by the solid and phantom outlines of the cam **92**, cam follower **154**, and wire **164** with the projection **156** moving into and out of the notch **94**. As represented, when the projection **156** moves into the notch **94**, the wire **164** is moved upwardly along the outer edge of the ratchet wheel **174** to the position indicated in phantom outline. As the cam **92** continues to turn, the projection **156** rides along the inclined wall of the notch **94** and out of the notch to again engage the outer circular surface of the cam. As this occurs, the cam follower **154** is pivoted away from the cam **92** to drive the end of the wire engaging the ratchet wheel **174** downwardly against a tooth of the ratchet wheel causing the wheel to turn in a clockwise direction (when viewed from the front of the programmer). This, in turn, rotates the movable contact **58** to engage a different a.m. or p.m. day contact **52** and turns the day dial **70** to appropriately indicate the day contact then being engaged by the movable contact.

Since the cam **92** includes a single notch, the advancing of the ratchet wheel **174** occurs once each revolution of the cam and hence once each 12-hour period. During operation of the programmer, the advancing of the ratchet wheel to move the movable contact **58** preferably occurs just prior to the time the switch arm **44** engages the input terminal **46**, that is just before 12 o'clock midnight and 12 o'clock noon. The same advancing of the movable contact takes place upon a manual turning of the minute dial **42** to turn the cam **92** in either direction. This allows the operator to preset both the hour and day sections of the programmer by turning the minute dial and assures that a manual turning of the minute dial will not damage the day section of the programmer.

In the manner just described, the day dial **70** turns with operation of the hour section **14** of the programmer and rotation of the ratchet wheel **174** in a clockwise direction. In addition, the day dial **70** is connected to the ratchet wheel **174** such that a manual turning of the day dial in a clockwise direction turns the ratchet wheel to enable the operator to set day section to correspond to the actual twelve-hour period of the day of the week before starting the programmer. Also, the connection is such that a turning of the day dial **70** in a counterclockwise direction effectively disconnects the day dial from the ratchet wheel, which is held stationary by a stop means **178**, to allow counterclockwise movement of the dial independent of the wheel.

The rotation connection of the ratchet wheel **174** to the front panel **66** as well as the connection of the day dial **70** to the ratchet wheel is most clearly illustrated in FIGURES 2 and 7. As represented, the tubular shaft **176** of the ratchet wheel extends forward into a collar **180** surrounding an opening **182** in the front panel **66**, centrally located within the array of hour contacts **52**. The front end of the shaft **176** is spiral-shaped, spiralling forward in a clockwise direction with a diametric shoulder **184** connecting the beginning and ends of the spiral. The spiral-shaped end of the shaft **176** engages and mates with a similarly spiral-shaped end **186** of a sleeve **188** extending forward from the day dial **70**. The sleeve **188** is stationed for rotation within the opening **182** with its spiral-shaped end spiralling forward in a clockwise direction and a daimetric shoulder **190** connecting the beginning and end of the spiral.

A flatheaded bolt **192** extends through a central opening **194** in the dial **70**, the sleeve **188**, and the tubular shaft **176**. Beyond the ratchet wheel **174**, the bolt **192** passes through a concave spring disk **196**, and a coil spring **198** stationed between a pair of annular spring retainers **200** and **202**.

The spring combination is held in place by a pair of nuts 204 threadedly engaging the end of the bolt 192. The nuts press against a rear spring retainer 202 to compress the coil spring 198 against the back of the ratchet wheel. This, in turn, produces an axial force on the bolt 192 urging the rear end of the dial sleeve 188 tightly against the front end of the shaft 176 to effectively lock the dial 70 to the shaft for turning therewith in a clockwise direction. In particular, when the ratchet wheel is turned in a clockwise direction (when viewed from the front), the shoulders 184 and 190 are pressed tightly against each other to cause the day dial 70 to turn with the ratchet wheel. This positive connection also allows an operator to turn the ratchet wheel and movable contact 58 in a clockwise direction with a like turning of the day dial 70, and to set the day section 16 to correspond to the particular a.m. or p.m. period of the day.

A turning of the day dial 70 in an opposite or counterclockwise direction, however, separates the shoulder 190 from the shoulder 184 of the shaft, which is held in place by the stop means 178 for the ratchet wheel 174. The spiral-shaped end of the sleeve 188 then rides over the end of the shaft 176 and moves axially along the bolt 192 relative to the shaft. The coil spring 198 accommodates such movement and returns the dial into positive connection with the shaft upon the operator's release of the dial. The coil spring thus provides means for automatically reindexing the dial to indicate a proper position of the movable contact 58 of the day section of the programmer despite an improper turning of the dial by its operator.

In the illustrated form of the programmer, the movable contact 58 for the day section 16 takes the form of a pin 206 extending through a hole 208 in the ratchet wheel 174 with one end riding in a circle to successively engage the a.m. and p.m. day contacts 52. An opposite end of the pin 206 extends rearward beyond the back of the ratchet wheel to engage the spring plate 196. The spring plate 196 in turn continuously urges the pin 206 forward to press tightly against the back of the front panel 66 to insure a complete electrical connection between the pin and each day contact 52 as the ratchet wheel 174 turns to advance the pin between successive day contacts.

A similar pin 209 extends through the ratchet wheel 174 and is tightly secured thereto to press against the spring plate 196 opposite the pin 206 to urge the spring plate against the pin 206. The pin 209 is separated and electrically insulated from the back of the front panel 66 by a felt washer 210 extending around the collar 180.

As previously indicated, the movable contact 58 is electrically connected to the output terminal 62 for the programmer. The preferred form of such connection is illustrated most clearly in FIGURES 2 and 8, and includes a bent metal wire 212 looped around and supported by a post 214 of insulating material and attached thereto by a screw 216. The screw presses against the top of the wire 212 and also connects the output terminal 62 to the wire as illustrated.

One end 218 of the wire 212 rides on top of the spring plate 196. An opposite end 220 of the wire is bent to ride along the outer surface of the ratchet wheel 174 and to successively engage the teeth thereof to prevent turning of the ratchet wheel in other than a clockwise direction (when viewed from the front). Thus, the bent wire 212 comprises both an electrical connection from the spring plate 196 to the output terminal 62 and the stop means 178 for limiting rotation of the ratchet wheel to one direction.

By way of summary, consider the over-all electrical and mechanical operation of the programmer for the sequence set by the controls on the face of the timer illustrated in FIGURE 1. As represented, the minute dial 42 and hour hand 36 indicate that it is about 1:10 and that the 2 o'clock switch is closed. On the day section 16 of the programmer, the Monday a.m. switch is closed and the day indicating dial is pointing to Monday a.m., indicating that the movable contact 58 is engaging the Monday a.m. contact 52.

As the motor operates, the minute dial 42 and hour hand 36 turn in a clockwise direction. When they indicate that it is 2 o'clock, the switch arm 44 engages the input terminal 46 to complete an electrical circuit from the 24-volt source through the closed 2 o'clock switch 18 and the closed control 56 switch to the day section 16. In the day section, the current flows through the closed Monday a.m. switch 48 and the movable contact 58 to the output terminal 62 to supply starting power to the electrically controlled apparatus associated with the programmer. Continued turning of the minute dial 42 moves the switch arm 44 from the input terminal 46 to break contact therebetween and to terminate the starting signal.

No further starting signals are developed by the programmer until the 2 o'clock Monday a.m. of the following week. During that time interval, every twelve hours, the ratchet wheel 174 and day dial 70 are advanced in the manner previously described.

From the foregoing, it is appreciated that the present invention provides an improved programmer for generating relatively short starting signals to start electrically controlled apparatus at predetermined and selectively controllable times. The programmer provides such control for an entire week and is simple in design, lightweight, relatively inexpensive and in practice has proven extremely reliable in operation.

While a particular form of programmer has been described in detail herein, changes and modifications, of course, may occur to those skilled in the art without departing from the spirit of the invention. It is therefore intended that the present invention be limited in scope only by the terms of the following claims.

I claim:

1. A programmer for starting electrically controlled apparatus at predetermined and controllable times, comprising:

a first plurality of stationary contacts;

a first plurality of normally open switches connected to a first common lead and each to a different one of said first plurality of stationary contacts;

a first movable contact;

drive means for moving said first movable contact to successively engage said contacts of said first plurality of stationary contacts at first predetermined time intervals;

means for momentarily applying electrical power to said first movable contact when engaging each contact of said first plurality of stationary contacts including normally open switch means connected to a source of electrical power and to said first movable contact and responsive to movement of said first movable contact for momentarily closing as said first movable contact engages each contact of said first plurality of stationary contacts;

a second plurality of stationary contacts;

a second plurality of normally open switches connected to a second common lead and each to a different one of said second plurality of stationary contacts;

a control switch between said first and second common leads;

a second movable contact;

an output terminal connected to said second movable contact;

and means for moving said second movable contact to successively engage said contacts of said second plurality of stationary contacts at second predetermined time intervals different than said first time intervals.

2. The programmer of claim 1, wherein said means for moving said second movable contact includes means connected to and driven by said drive means for moving said second movable contact to successively engage the

contacts of said second plurality of stationary contacts.

3. A programmer for starting electrically controlled apparatus at predetermined and controllable times, comprising:

a constant speed drive means;

a first plurality of stationary contacts spaced in a circular array;

a first plurality of normally open switches connected to a first common lead and each to a different one of said first plurality of stationary contacts;

a first movable contact;

a first support means connected to said drive means and carrying said first movable contact in a circle to successively engage said contacts of said first plurality of stationary contacts at first predetermined time intervals;

means for momentarily applying electrical power to said first movable contact when engaging each contact of said first plurality of stationary contacts;

a second plurality of stationary contacts spaced in a circular array;

a second plurality of normally open switches connected to a second common lead and each to a different one of said second plurality of stationary contacts;

a second movable contact;

second support means carrying said second movable contact in a circular path to successively engage said contacts of said second plurality of stationary contacts;

an output terminal connected to said second movable contact;

means connected to and driven by said drive means for turning said second support means to move said second movable contact between contacts of said second plurality of stationary contacts at second predetermined time intervals different than said first time intervals;

and a control switch between said first and second common leads.

4. A programmer for starting electrically controlled apparatus at predetermined and controllable times, comprising:

a constant speed drive means;

a first plurality of stationary contacts spaced evenly from each other in a circular array;

a first plurality of normally open switches connected to a first common lead and each to a different one of said first plurality of stationary contacts;

a first movable contact;

first support means connected to said drive means and carrying said first movable contact in a circle to successively engage said contacts of said first plurality of said stationary contacts at predetermined time intervals, said first support means including a generally smooth and circular cam having a recess in its outer surface;

a cam follower having a projection thereon;

pivot means connecting said follower for pivotal movement toward and away from said cam;

means continuously urging said projection against said cam to follow the contour thereof and to ride into and out of said recess with a turning of said cam;

means for momentarily applying electrical power to said first movable contact when engaging each contact of said first plurality of stationary contacts;

a second plurality of stationary contacts spaced evenly from each other in a circular array;

a second plurality of normally open switches connected to a second common lead and each to a different one of said second plurality of stationary contacts;

a second movable contact;

second support means carrying said second movable contact in a circular path to successively engage said contacts of said second plurality of contacts, said second support means including a ratchet wheel;

a ratchet drive arm connected to said cam follower with one end in tangential driving contact with said ratchet wheel to turn said ratchet wheel in one direction with movement of said cam follower toward and away from said cam to advance said second movable contact between successive ones of said second plurality of stationary contacts;

an output terminal connected to said second movable contact;

and a control switch connecting said first and second common leads.

5. The programmer of claim 4 including means engaging said ratchet wheel for limiting rotation of said wheel to said one direction.

6. The programmer of claim 4 wherein said recess in said cam is generally V-shaped, and wherein said projection on said cam follower is generally V-shaped with a greater central angle than said V-shaped recess.

7. The programmer of claim 6 wherein said ratchet driving arm is pivotally connected at a point spaced from one end thereof to said cam follower with an opposite end in tangential driving contact with said ratchet wheel to turn said ratchet wheel with movement of said cam follower toward and away from said cam into and out of said recess and wherein said means for continuously urging said projection against said cam follower includes the spring means connected to said one end of said ratchet driving arm for pivoting said opposite end of said arm against said wheel and urging said cam follower against said cam.

8. The programmer of claim 3 wherein:

said programmer includes a front panel of insulating material;

said first and second plurality of stationary contacts and said first and second common leads are bonded to the back of said front panel;

said first and second plurality of normally open switches and said control switch are carried on the back of said front panel and each includes a movable switch arm for closing its associated switch; and

said programmer includes manually movable means connected to each switch arm and extending through an opening in said front panel for moving its associated switch arm to open and close its associated switch.

9. The programmer of claim 8 wherein each manually movable means includes a pin of insulating material carrying a switch arm against the back of said panel, a resilient washer around said pin, and a push nut around said pin and compressing said rubber washer against said switch arm to press tightly against the back of said panel.

10. A programmer for starting electrically controlled apparatus at predetermined and controllable times, comprising:

a front panel of insulating material;

an electrical circuit carried on the back of said front panel and including a first plurality of stationary contacts spaced evenly from each other and in a circular array, a first plurality of normally open switches connected to a first common lead and each to a different one of said first plurality of stationary contacts, a second plurality of stationary contacts spaced evenly from each other in a circular array, a second plurality of normally open switches connected to a second common lead and each to a different one of said second plurality of stationary contacts, and a control switch between said first and second common leads, each switch including a movable switch arm for closing its associated switch;

manually movable means connected to each switch arm and extending through an opening in said front panel for moving its associate switch arm to open and close its associated switch;

a constant speed drive means;

a movable contact;

first support means connected to said drive means and carrying said movable contact in a circle to successively engage said contacts of said first plurality of stationary contacts at predetermined time intervals, said first support means including a generally smooth circular cam having a recess therein;

means for momentarily applying electrical power to said first movable contact when engaging each contact of said first plurality of stationary contacts;

a cam follower having a projection thereon;

pivot means connecting said follower for pivotal movement toward and away from said cam;

a metal pin;

second support means carrying said pin in a circular path to successively engage said contacts of said second plurality of stationary contacts, said second support means including a ratchet wheel of insulating material supported for rotation over said second plurality of stationary contacts with said pin extending through said wheel to successively engage said contacts;

first spring means continuously urging said pin against the back of said panel;

an output terminal connected to said first spring means;

a ratchet wheel drive arm pivotally connected at a point spaced from one end to said cam follower with an opposite end in tangential driving engagement with said ratchet wheel to turn said ratchet wheel in one direction with movement of said cam follower toward and away from said cam, into and out of said recess with a turning of said cam;

and second spring means connected to said one end of said arm for pivoting said opposite end of said arm against said wheel and urging said follower against said cam.

11. The programmer of claim **10** wherein said first spring means includes a spring disc over said wheel and wherein said programmer includes a contact arm connected to said output terminal and having one end riding on said spring disc and an opposite end engaging said ratchet wheel to prevent rotation of said wheel in other than said one direction.

12. A programmer for starting electrically controlled apparatus at predetermined and controllable times, comprising:

a front panel of insulating material;

an electrical circuit carried on the back of said front panel and including a first plurality of stationary contacts spaced evenly from each other and in a circular array, a first plurality of normally open switches connected to a first common lead and each to a different one of said first plurality of stationary contacts, a second plurality of stationary contacts spaced evenly from each other in a circular array, a second plurality of normally open switches connected to a second common lead and each to a different one of said second plurality of stationary contacts, and a control switch between said first and second common leads, each switch including a movable switch arm for closing its associated switch;

manually movable means connected to each switch arm and extending through an opening in said front panel for moving its associated switch arm to open and close its associated switch;

a constant speed drive means;

a first movable contact;

first support means connected to said drive means and carrying said movable contact in a circle to successively engage said contacts of said first plurality of stationary contacts at predetermined time intervals, said first support means including a generally smooth circular cam having a recess therein;

means for momentarily applying electrical power to said first movable contact when engaging each contact of said first plurality of stationary contacts;

a cam follower having a projection thereon;

pivot means connecting said follower for pivotal movement toward and away from said cam;

a second movable contact;

second support means carrying said second movable contact in a circular path to successively engage said contacts of said second plurality of stationary contacts, said second support means including a ratchet wheel of insulating material supported for rotation over said second plurality of stationary contacts with said second movable contact extending through said wheel to successively engage said contacts;

an output terminal connected to said second movable contact;

a ratchet wheel drive arm pivotally connected at a point spaced from one end to said cam follower with an opposite end in tangential driving engagement with said ratchet wheel to turn said ratchet wheel in one direction with movement of said cam follower toward and away from said cam, into and out of said recess with a turning of said cam;

and spring means connected to said one end of said arm for pivoting said opposite end of said arm against said wheel and urging said follower against said cam.

13. A programmer for starting electrically controlled apparatus at predetermined and controllable times, comprising:

a front panel of insulating material;

an electrical circuit carried on the back of said front panel and including a first plurality of stationary contacts spaced evenly from each other in a circular array, a first plurality of normally open switches connected to a first common lead and each to a different one of said first plurality of stationary contacts, a second plurality of stationary contacts spaced evenly from each other in a circular array, a second plurality of normally open switches connected to a second common lead and each to a different one of said second plurality of stationary contacts, and a control switch between said first and second common leads;

a constant speed drive means;

a first movable contact;

first support means connected to said drive means and carrying said first movable contact in a circular path to successively engage said contacts of said first plurality of stationary contacts at predetermined time intervals;

means for momentarily applying electrical power to said first movable contact when engaging each contact of said first plurality of stationary contacts;

a second movable contact;

second support means carrying said second movable contact and including a forwardly extending shaft centrally located within said circular array of second plurality of stationary contacts and journaled to said front panel for turning said second movable contact in a circular path to successively engage said contacts of said second plurality of stationary contacts;

means connected to and driven by said drive means for turning said second support means to move said second movable contact between contacts of said second plurality of stationary contacts at second predetermined time intervals different from said first mentioned time intervals;

a pointer connected to said shaft for turning therewith over said front panel to point toward the contact of said second plurality of stationary contacts then engaged by said second movable contact;

and clutch means between said pointer and said shaft for positively driving said pointer with said shaft in a first rotational direction and for effectively releasing said pointer from said shaft to permit turning

of said pointer in an opposite rotational direction independent of said shaft, said clutch means including a collar extending from said pointer and including a spiral-shaped end with a diametric connecting wall between the ends of said spiral, an end of said shaft facing said collar and including a spiral-shaped surface mating with said spiral-shaped end of said collar and including a diametric wall between the ends of said spiral, and spring means normally urging said spiral-shaped ends toward each other.

14. A programmer for starting electrically controlled apparatus at predetermined and controllable times, comprising:

a front panel of insulating material;

an electrical circuit carried on the back of said front panel and including a first plurality of stationary contacts spaced evenly from each other in a circular array, a first plurality of normally open switches connected to a first common lead and each to a different one of said first plurality of stationary contacts, a second plurality of stationary contacts spaced evenly from each other in a circular array, a second plurality of normally open switches connected to a second common lead and each to a different one of said second plurality of stationary contacts, and a control switch between said first and second common leads;

a constant speed drive means including a drive shaft;

a first movable contact;

first support means for carrying said first movable contact in a circular path to successively engage said contacts of said first plurality of stationary contacts at first predetermined time intervals;

a slip clutch between said first support means and said drive shaft for connecting said first support means to turn with said drive shaft in a first direction and for effectively disengaging to permit turning of said first support means in an opposite direction independent of said drive shaft;

a manually turnable pointer connected to said first support means for turning therewith over said front panel to point toward the contact of said first plurality of contacts then engaged by said first movable contact;

means for momentarily applying electrical power to said first movable contact when engaging each contact of said first plurality of stationary contacts;

a second movable contact;

second support means carrying said second movable contact in a circular path to successively engage said contacts of said second plurality of contacts;

an output terminal connected to said second movable contact;

and means connected to said drive means for moving said second movable contact between contacts of said second plurality of stationary contacts at second predetermined time intervals different than said first time intervals.

15. The programmer of claim **1** wherein said normally open switch means comprises:

an input terminal connected to said source of electrical power;

a movable arm electrically connected to said first movable contact; and

means connecting said movable arm to said drive means for movement therewith to momentarily engage said input terminal as said first movable contact engages each contact of said first plurality of stationary contacts.

16. The programmer of claim **3** wherein said means connected to and driven by said drive means for turning said second support means includes a linkage between said first support means and said second support means for turning said second support means in response to predetermined degrees of rotation of said first support means in either direction.

References Cited

UNITED STATES PATENTS

2,825,020	11/1953	Johnson	200—37
3,231,691	1/1966	Sherman	200—37

BERNARD A. GILHEANY, *Primary Examiner.*

G. MAIER, H. E. SPRINGBORN, *Assistant Examiners.*