Aug. 4, 1953 C. R. BILBREY 2,647,517

PEN OR PENCIL HOLDER

Filed June 22, 1949 2 Sheets-Sheet 1

Fig. 1

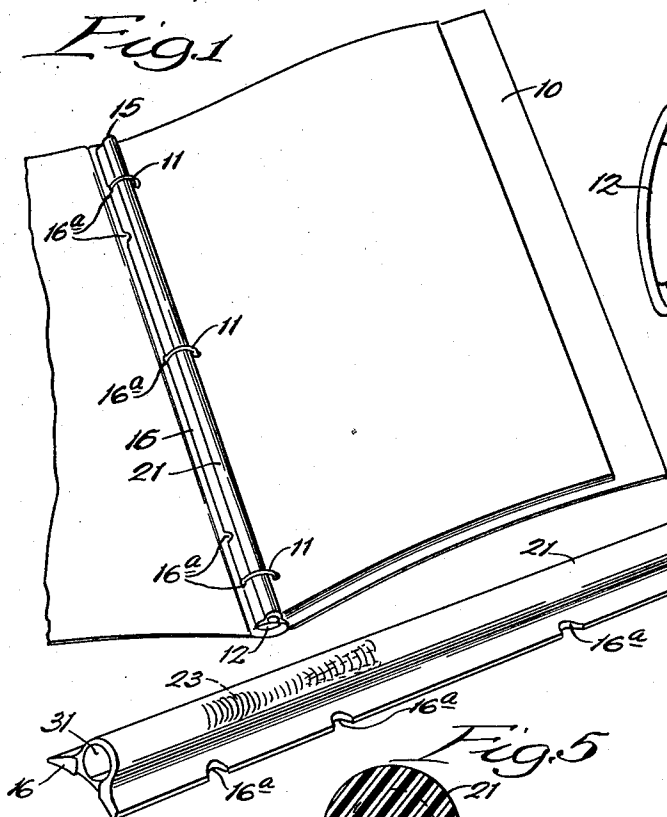

Fig. 2

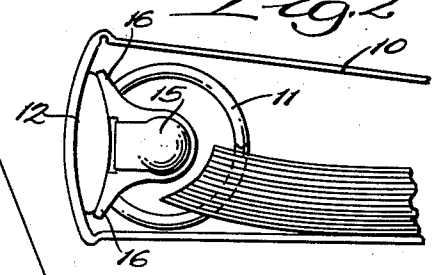

Fig. 3

Fig. 5

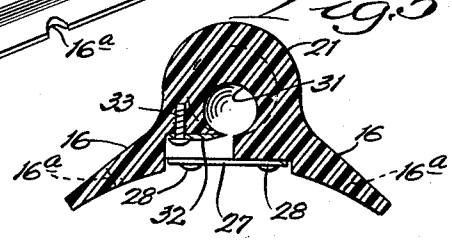

Fig. 6

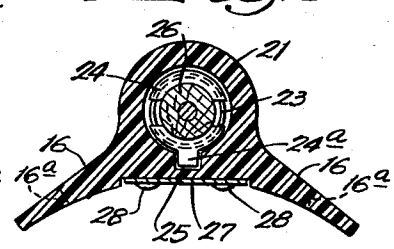

Fig. 4

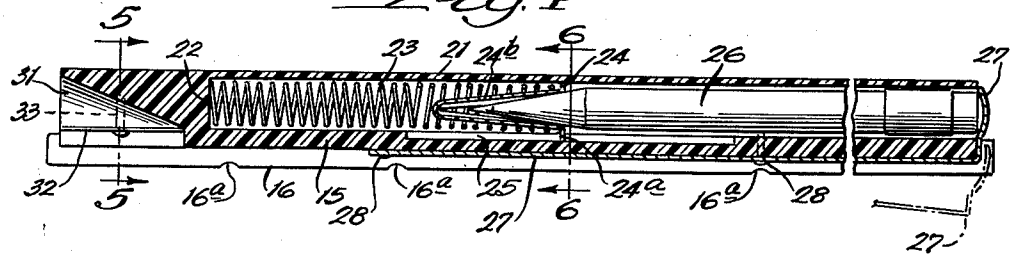

INVENTOR:
Charles R. Bilbrey,

BY Dawson, Ooms, Boothe and Spangenberg,
ATTORNEYS.

Aug. 4, 1953 C. R. BILBREY 2,647,517

PEN OR PENCIL HOLDER

Filed June 22, 1949 2 Sheets-Sheet 2

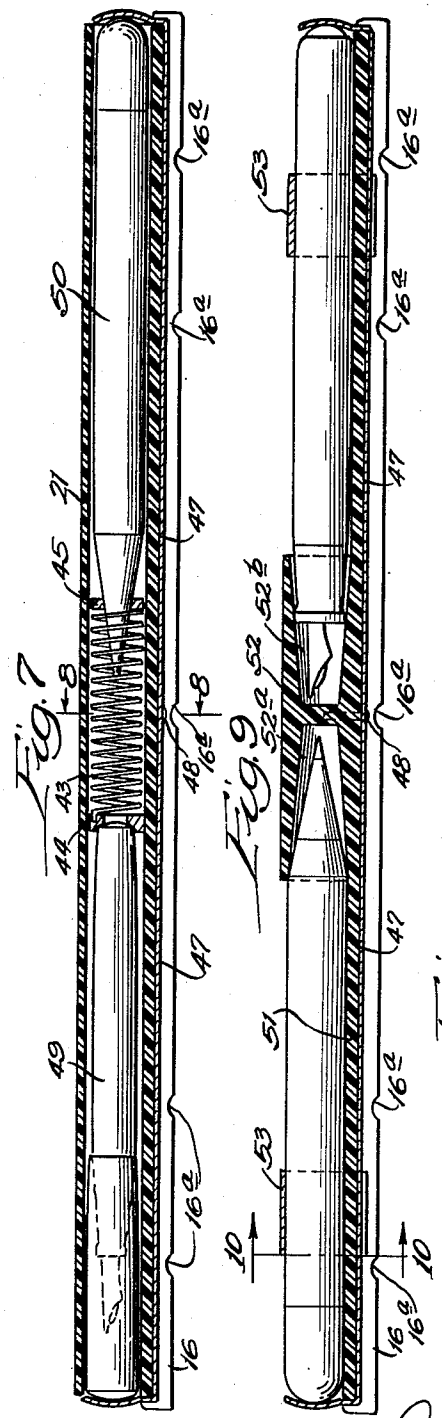

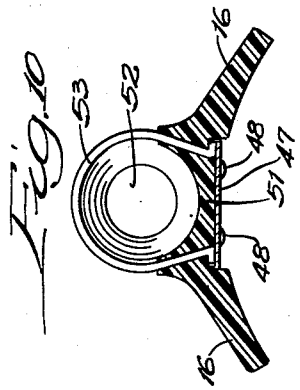

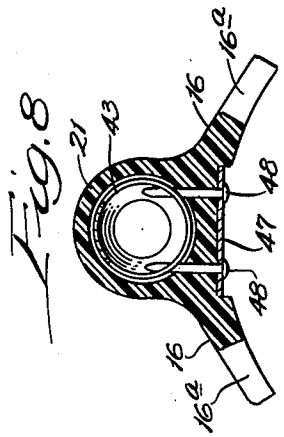

INVENTOR:
Charles R. Bilbrey,
BY Dawson, Orrick, Bottum & Spangenberg,
ATTORNEYS.

Patented Aug. 4, 1953 2,647,517

UNITED STATES PATENT OFFICE

2,647,517

PEN OR PENCIL HOLDER

Charles R. Bilbrey, Chicago, Ill.

Application June 22, 1949, Serial No. 100,673

3 Claims. (Cl. 129—1)

1

This invention relates to a pen or pencil holder; in particular, it relates to a device adapted to be received within the snap rings of a conventional loose-leaf notebook and adapted to carry therein a pen, pencil, or other writing tool.

The provision of a convenient, safe, and readily accessible place for carrying a writing tool is a problem which always confronts students, attorneys, and other persons who are accustomed to doing research in libraries. One generally used but highly unsatisfactory expedient is the pocket clip; its disadvantages are numerous. For one thing, a pencil carried in the pocket can be depended on to mark up the clothing of the wearer, and the sharp point frequently tears clothing. Moreover, the point of a pencil carried in a pocket is very likely to be broken.

Other disadvantages of carrying pencils in pockets include marring of personal neatness and the fact that women's clothes almost never provide any pockets suitable for accommodation of writing instruments. Women usually must carry such devices in their purses where they compete for space with a very large number of other articles.

It is an object of this invention to provide a pencil or pen-carrying attachment insertable in a loose-leaf notebook (which is an ever-present part of the working equipment of anyone using a library for study or research).

Another object of my invention is to provide a device, insertable and carryable in a loose-leaf notebook, which will hold one or more pencils secure against vibration and which will protect their points from breakage.

Still another object of my invention is to provide a holder device, mountable in the snap rings of a loose-leaf notebook, wherein means are provided for holding a pencil or pen securely yet removably.

A still further object of my invention is to provide a holder for a writing instrument which can be mounted within the snap rings of a loose-leaf notebook and securely held in place thereby, although removable on opening of the snap rings.

A still further object of my invention is to provide a pencil holder, mountable within a loose-leaf notebook, which provides both a carrying receptacle for the pencil and a built-in pencil sharpener.

Other objects and advantages of my invention will appear as the specification proceeds.

My invention is illustrated, in illustrative embodiments, in the appended drawing, of which Figure 1 is a perspective view of a conventional loose-leaf notebook showing a writing instrument holder according to my invention mounted within the snap rings; Fig. 2, a fragmentary detail view of the notebook of Fig. 1, said view showing the cover and binder mechanism of the notebook as viewed along the axis of the snap rings; Fig. 3 is a perspective view of an illlustrative embodiment of my invention as it appears when removed from the notebook in which it is normally carried; Fig. 4, is a sectional view of the embodiment of Fig. 3, the section being a vertical one along the principal axis; Fig. 5 is a transverse sectional view of the embodiment of Fig. 3, the section being taken along the line 5—5 of Fig. 4; Fig. 6 is another transverse sectional view of the embodiment of Fig. 3, the section being taken along the line 6—6 of Fig. 4; Fig. 7 is a vertical sectional view, taken along the principal axis, of a modified form of my invention; Fig. 8 is a transverse sectional view of the Fig. 7 embodiment, the section being taken along the line 8—8 of Fig. 7; Fig. 9 is a sectional view of a third form of my invention, the section being a vertical one taken along the main axis; and Fig. 10, a transverse sectional view of the embodiment of Fig. 9, the section being taken along the line 10—10 of Fig. 9.

2

Referring to Figs. 1 and 2, the notebook 10 therein shown is of the conventional snap-ring type having three snap rings 11. As will be seen best from Fig. 2, the snap rings are carried in and supported by a metal backing plate 12 which, as is customary, is provided with a rounded smooth forward surface. The writing instrument holder which constitutes my invention is carried within the snap rings and is denoted 15. It will be observed that it is of generally tubular form and provided with a pair of outwardly and downwardly extending flanges 16, the under surfaces of which are provided with concave curvature to conform substantially to the convex curvature of backing member 12.

Each of the wing flanges 16 has a plurality of notches 16*a* arranged symmetrically along the length thereof; these notches are intended for registration and co-operation with the snap rings 11. Since note-books vary one from another in the number and position of the snap rings, as many pairs of notches 16*a* may be provided as desired; those which are not received within snap rings serve no function with respect to a particular notebook, but, as will be obvious, they increase the versatility and usefulness of any given holder device 15.

As will be noted by reference to Figs. 3–10 inclusive, the wing flanges 16 and notches 16*a* are common to all the embodiments of my invention therein illustrated. Accordingly, those reference numerals will be employed throughout this specification to denote those elements.

A typical embodiment of my invention is shown in considerable detail in Figs. 3–6 inclusive. An elongated tubular body 21, which may be formed of metal, plastic, or any other suitable material,

is provided with the wing flanges 16 and notches 16a already mentioned. The wing flanges may, if desired, be molded or otherwise formed integrally with the barrel or body member 21; if desired, the wing flanges may be formed of a separate piece and suitably secured to the barrel member by bolting, welding, riveting, or other means.

Barrel member 21 is hollow throughout the greater part of its length; the hollowed out inner portion, however, terminates in a base 22 which forms a seat for a coil spring 23. The coil spring 23 is of diameter slightly less than the inner diameter of the hollow portion of barrel 21. The magnitude of that inner diameter should normally be somewhat greater than the diameter of the writing instrument to be carried therewithin; if an ordinary wooden pencil is to be carried, the inner diameter of barrel member 21 might be about three-eighths of an inch.

The end of coil spring 23 opposite seat 22 is controlled by a stop member 24 having a downwardly extending projection 24a, as best shown in Fig. 6. Projection 24a rides in an axial slot or recess along the inner surface of barrel 21, thus permitting to coil spring 23 a considerable range of movement but limiting both its expansion and compression. In the embodiment shown the stop member 24 is provided with an extension 24b of roughly conical shape extending within the coil spring 23. This inward extension 24b is intended as a socket to receive and protect the point end of pencil 26 inserted within the barrel 21. The extension 24b is a refinement which, while desirable, is not essential to the operation of my invention, and it may be dispensed with if desired. If extension 24b is not employed, then stop member 24 should be provided with a central aperture of sufficient size to receive the tapered point end of pencil 26. The interior of barrel member 21 is open at its end opposite seat 22, and a movable closure member for the open end of barrel 21 is provided by a leaf spring 27, the principal length of which is mounted axially along the under side of barrel 21 midway between the wing flanges 16. Pins or rivets 28 may be employed to hold spring member 27 in proper position on the under side of barrel member 21.

The end of leaf-spring member 27 adjacent the open end of barrel 21 is provided with an upwardly extending portion bent at right angles to the main body of the spring which is secured to the under side of barrel 21. This orthogonally disposed portion of leaf spring 27 covers the open end of barrel member 21 and serves as a closure therefor. If desired, the closure portion of leaf spring 27 may be provided with a curved shape which is slightly concave on the surface facing barrel 21, to provide a seat for the end of pencil 26.

When removal or insertion of pencil 26 is required, a touch of a finger on spring member 27 will cause it to be depressed as indicated in dotted lines on Fig. 4, thus opening the interior of barrel 21 to permit insertion or removal of pencil 26.

In the embodiment of my invention shown in Figs. 3–6 inclusive, I have provided, as an added convenience, a pencil sharpener mounted within the end of barrel 21 opposite the open end through which the pencil is inserted or removed. The pencil sharpener may be of any desired type; in the embodiment illustrated I have provided a conventional type having a conical receiving chamber and a knife-edge disposed thereon. The receiving chamber of the pencil sharpener is denoted on the drawings with the numeral 31, and the shearing or cutting knife is denoted 32. The knife may be secured in place by one or more screws or pins 33.

In the operation of the embodiment shown in Figs. 3–6, the snap-ring notebook which is to receive my invention is first opened flat and the snap rings sprung apart. Under these conditions my pencil holder can readily be inserted within the rings, the wing flanges 16 and notches 16a co-operating to hold the instrument in contact with the rings and thus secured against axial movement. The rings are then snapped shut, and the notebook can thereupon be used normally without any inconvenience resulting from the presence of my pencil holder.

Insertion of the pencil into the open end of barrel member 21 is accomplished by depressing leaf spring 27. The pencil is then pressed into the interior of barrel member 21 until it is entirely enclosed; normally this will involve considerable compression of coil spring 23. When pencil 26 is entirely within barrel 21, leaf spring 27 is released and the pencil is then held securely against vibration or movement by the co-operative action of springs 23 and 27. Whenever removal of the pencil is desired, spring 27 may be depressed with the finger and spring 23 will thereupon cause the pencil 26 to "pop" out into the waiting hand of the user.

Any time sharpening of the pencil is desired, it can be accomplished by the use of the sharpener portion 31 at the opposite end of barrel 21.

From the foregoing description, it will be seen that my invention provides a pencil holder which can be removably carried within the rings of a looseleaf notebook and which insures the availability of a sharp pencil, securely carried against vibration and resultant damage, at all times.

While, in the foregoing description of the embodiment of the invention illustrated in Figs. 3–6, I have assumed that the instrument to be carried within my holder device would be a conventional wooden pencil, the usefulness of my invention is by no means confined to carrying such pencils. If desired, my invention will be adapted for the secure storage and transportation of any type of writing instrument, including fountain pens or mechanical pencils. In Figs. 7 and 8 I have illustrated a form of my invention which is well adapted for carrying a fountain pen and a mechanical pencil. In that form of my invention, barrel member 21 is, as in the other embodiments, provided with wing flanges 16 and notches 16a. In the Fig. 7 embodiment, however, barrel 21 is hollow throughout its length and is thus provided with an aperture at each end. A coil spring 43 is supported within barrel 21 at substantially its midpoint; stop or seat members 44 and 45 are provided at the respective ends of spring 43. A leaf spring 47, similar in function to the spring 27 of the Fig. 3 embodiment, extends along the entire under side of barrel 21 and is provided with orthogonally disposed closure portions at each end. Pins 48, on the under side of barrel 21 midway between its ends, serve the double function of securing spring 47 to the under side of barrel 21 and also anchoring coil spring 43 in its proper place within the interior of barrel 21.

As may be seen from Fig. 7, accommodation for two writing instruments is thus provided by this form of my invention. If desired, a fountain pen 49 may be inserted in one end of barrel 21 and secured in place against vibration or other

movement by the co-operative action of springs 43 and 47.

At the same time, a pencil 50, which may be either a wood pencil or a mechanical type, may be carried within the other end of barrel 21 and similarly secured by springs 43 and 47 against escape or vibration.

Still another modification of my invention is illustrated in Figs. 9 and 10. In this form of my invention barrel 21 is replaced by a partially open support member 51 having a cylindrical central portion 52 provided with axial recesses 52*a* and 52*b* for receiving writing instruments. The under side of member 51 is provided with a double-ended leaf spring 47 identical in structure to that shown in the Fig. 7 embodiment; this leaf spring is anchored to the support member 51 at its midpoint by pins or screws 48.

Near each of the ends of support member 51, in slots provided therein, is mounted a spring sleeve or clamp 53. The precise manner of mounting of member 53 is not important, and it is understood that I am not limiting myself to the particular mounting style shown.

In the operation of this form of my invention, the writing instrument, normally a fountain pen or mechanical pencil, is passed through sleeve member 53 and thereupon inserted into recess 52*a* or 52*b*, as the case may be. The action just described is accomplished while the appropriate end of leaf spring 47 is being held down manually. After the writing instrument has been seated within recess 52*a* or 52*b*, leaf spring 47 is released and its orthogonally disposed portion thereupon engages the end of the writing instrument and holds it securely seated. As in the other forms of my invention, removal of the writing instrument is accomplished by depression of leaf spring 47. Since the resilient coil spring of the other embodiments has been dispensed with in this form of my invention, this embodiment is particularly adapted for use with fountain pens or mechanical pencils, the length of which remains constant. In the other forms, the coil spring assures firm seating of wooden pencils varying substantially one from another in length.

While I have in this specification described in considerable detail certain embodiments of my invention for purposes of illustration, it is understood that numerous variations in matters of detail can be made therein by persons skilled in the art without departing from the spirit and underlying principles of my invention. I accordingly desire that the scope of my invention shall not be limited to the particular embodiments herein shown and described but shall be determined by reference to the appended claims.

I claim:

1. In a writing instrument holder adapted to be removably carried in a snap-ring notebook, a tubular body member having an open end for receiving a writing instrument, a spring seat in said body member spaced from the open end thereof, said tubular body member providing interiorly thereof an elongated recess terminating at one end a spaced distance from said spring seat and terminating at the other end a substantial distance from the open end of said body member, an elongated coil spring within said body member and engaging at one end said seat while the other end of the spring is free to move axially within said body member, an annular stop member having a laterally-extending portion received in said recess and being axially slidable within said body member within the limits of said recess, said stop member providing a seat for the free end of said spring and having a centrally-aligned opening therein adapted to receive the pointed end of a writing instrument, and a leaf spring disposed longitudinally of said body member and being secured thereto and equipped with a laterally-extending closure portion adapted to extend over the open end of said body member, said leaf spring normally holding said closure portion in closure position and being manually movable to open said body member, said recess being related to said coil spring so that the stop member holds the spring in slightly compressed condition when the laterally-extending portion of the stop member engages the terminal end of the recess nearest the open end of said body member.

2. The structure of claim 1 wherein said tubular body member is equipped with laterally-extending wing flanges having a plurality of longitudinally-spaced notches adapted to align with the snap rings of a notebook for securing said holder therein.

3. In a writing instrument holder adapted to be removably carried in a snap-ring notebook, an elongated body member having a longitudinally-extending passage therein and an open end for receiving a writing instrument, a spring seat in said passage and spaced from the open end of said body member, said body member providing interiorly thereof an elongated recess in open communication with said passage and terminating at one end a spaced distance from said spring seat and terminating at the other end a relatively long distance from the open end of said body member, an elongated coil spring within said passage and engaging at one end said spring seat while the other end of the spring is free to move axially within said passage, a stop member slidably mounted within said passage and having a laterally-extending portion slidably received within said recess, said stop member providing a seat for the free end of said spring and having a centrally-aligned opening therein adapted to receive the reduced end of a writing instrument, and a leaf spring disposed longitudinally of said body member and being secured thereto and equipped with a laterally-extending closure portion adapted to extend over the open end of said body member, said leaf spring being biased to normally hold said closure portion in closure position and being manually movable to open the end of said body member, said recess being related to said coil spring so that the stop member holds the spring in slightly compressed condition when the laterally-extending portion of the stop member engages the terminal end of the recess nearest the open end of said body member.

CHARLES R. BILBREY.

References Cited in the file of this patent

UNITED STATES PATENTS

Number	Name	Date
199,253	Barrows et al.	Jan. 15, 1878
642,498	Smith	Jan. 30, 1900
854,507	Klipfel	May 21, 1907
1,107,644	Beidler	Aug. 18, 1914
2,184,823	Vernon	Dec. 26, 1939

FOREIGN PATENTS

Number	Country	Date
20,285	Great Britain	of 1905