US00D328552S

United States Patent [19]

Lee

[11] Patent Number: Des. 328,552

[45] Date of Patent: ** Aug. 11, 1992

[54] **HAND-OPERATED JUICER OR SIMILAR ARTICLE**

[76] Inventor: **Ming-Hsiang Lee**, No. 2, Hsin-Jen Rd., Tainan City, Taiwan

[**] Term: **14 Years**

[21] Appl. No.: **466,689**

[22] Filed: **Jan. 17, 1990**

[52] **U.S. Cl.** **D7/666**

[58] **Field of Search** ..... D7/372-374, D7/665, 666; 99/501-506; 100/98 R, 107, 213

[56] **References Cited**

U.S. PATENT DOCUMENTS

D. 150,308 7/1948 Mariani D7/666
D. 304,141 10/1989 Li D7/666

Primary Examiner—Terry A. Pfeffer
Attorney, Agent, or Firm—Christensen, O'Connor, Johnson & Kindness

[57] **CLAIM**

The ornamental design for hand-operated juicer or similar article, as shown and described.

DESCRIPTION

FIG. **1** is a perspective view of hand-operated juicer or similar article showing my new design;
FIG. **2** is a front elevational view thereof;
FIG. **3** is a rear elevational view thereof;
FIG. **4** is a left side view thereof;
FIG. **5** is a right side view thereof;
FIG. **6** is a top plan view thereof; and,
FIG. **7** is a bottom plan view thereof.

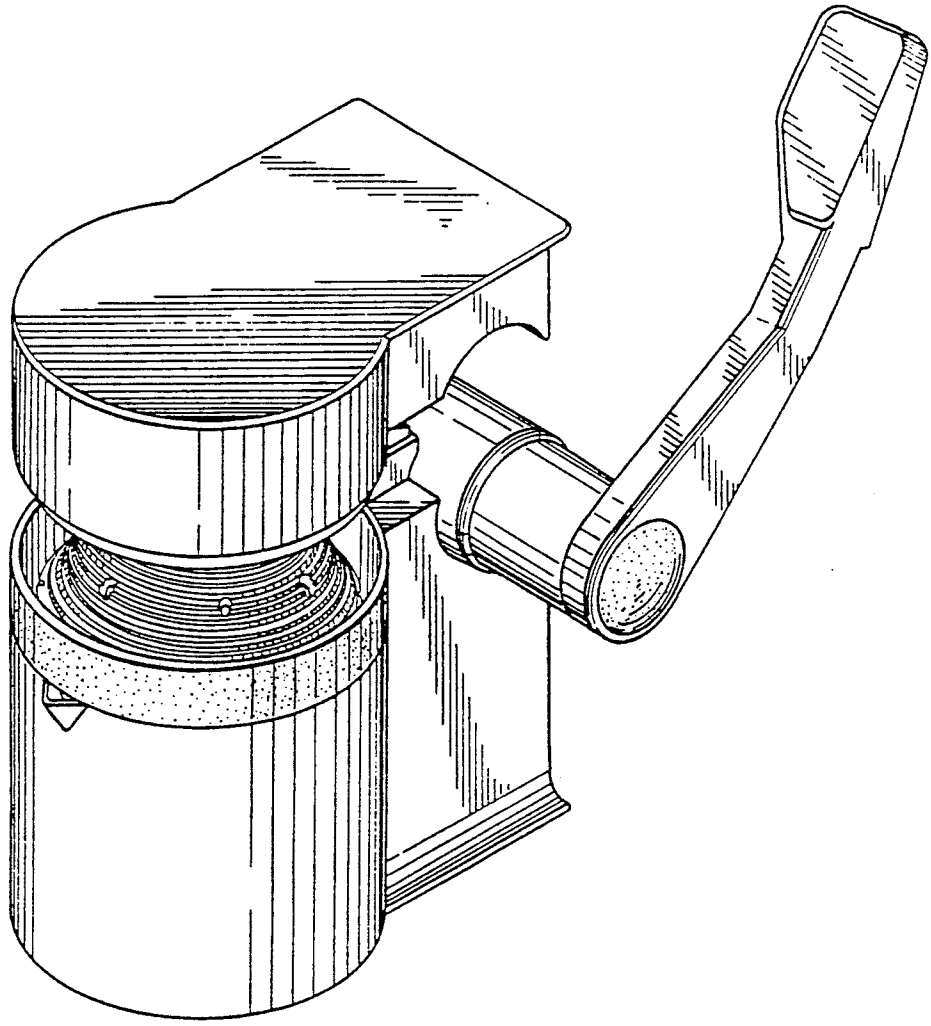

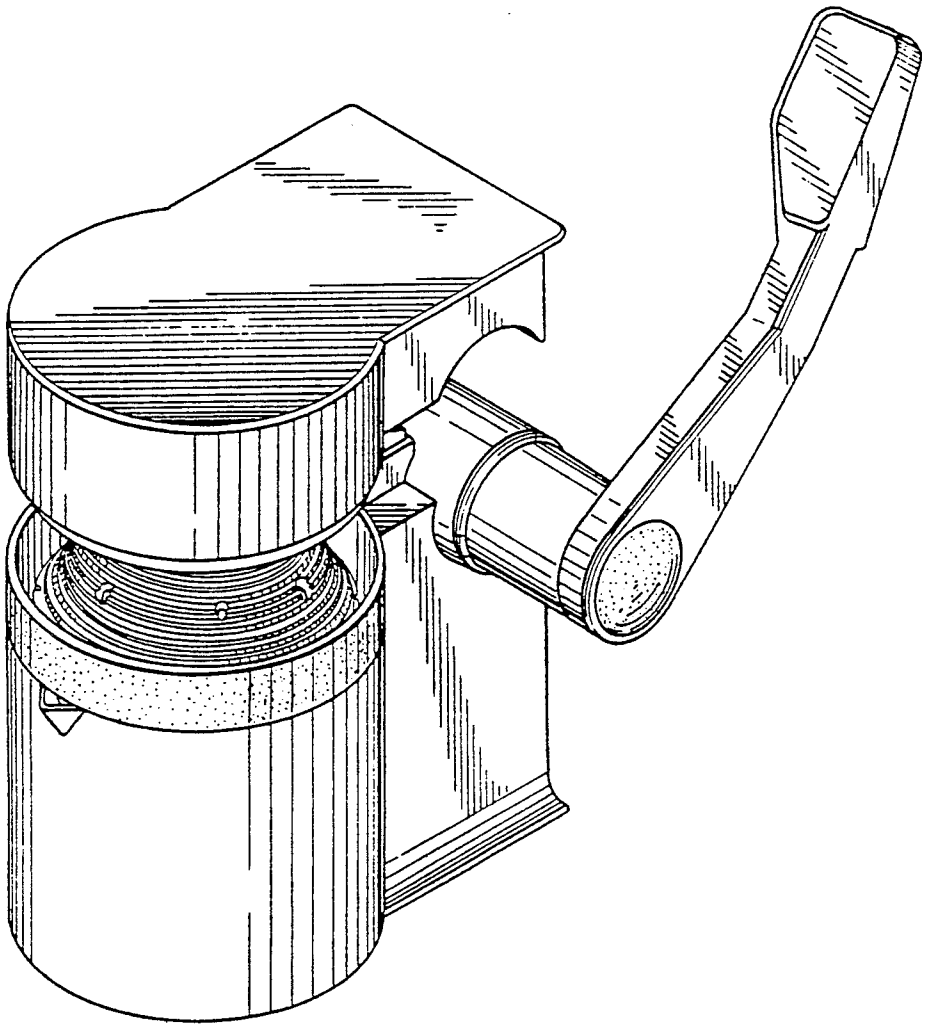

FIG. 1

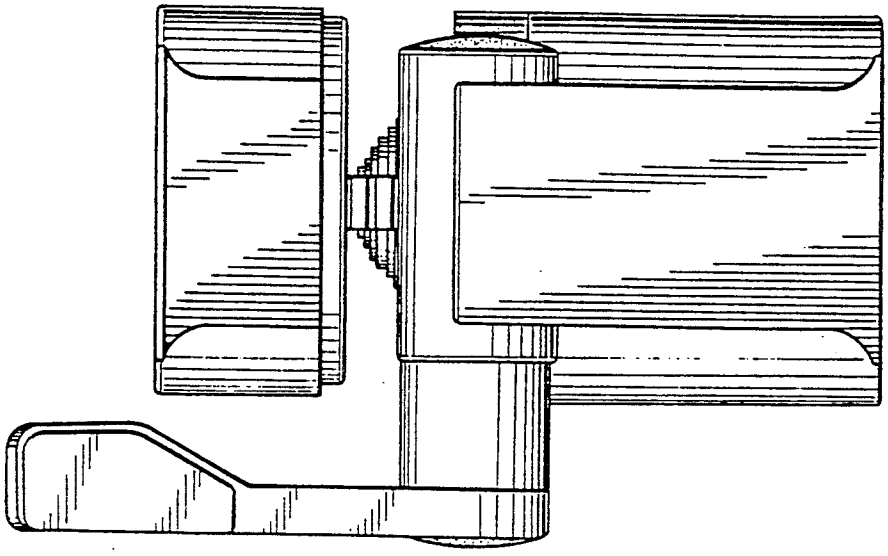

FIG. 3

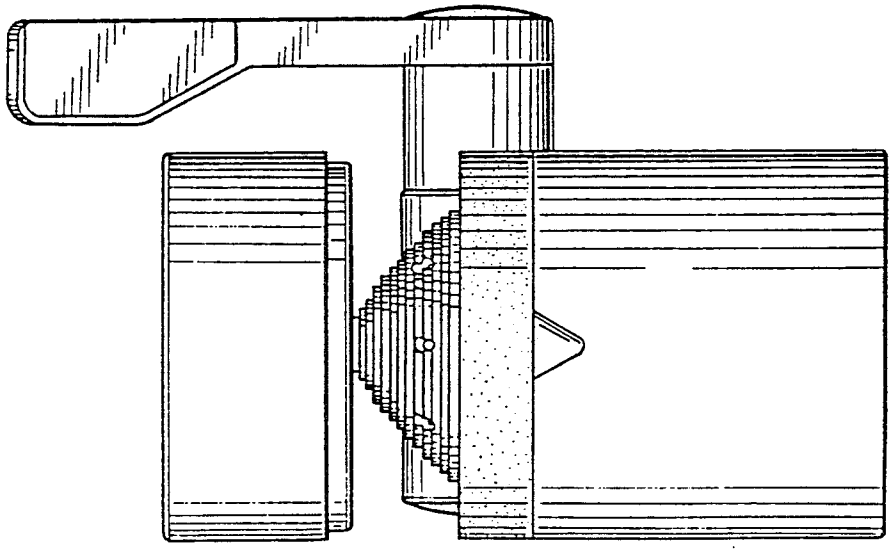

FIG. 2

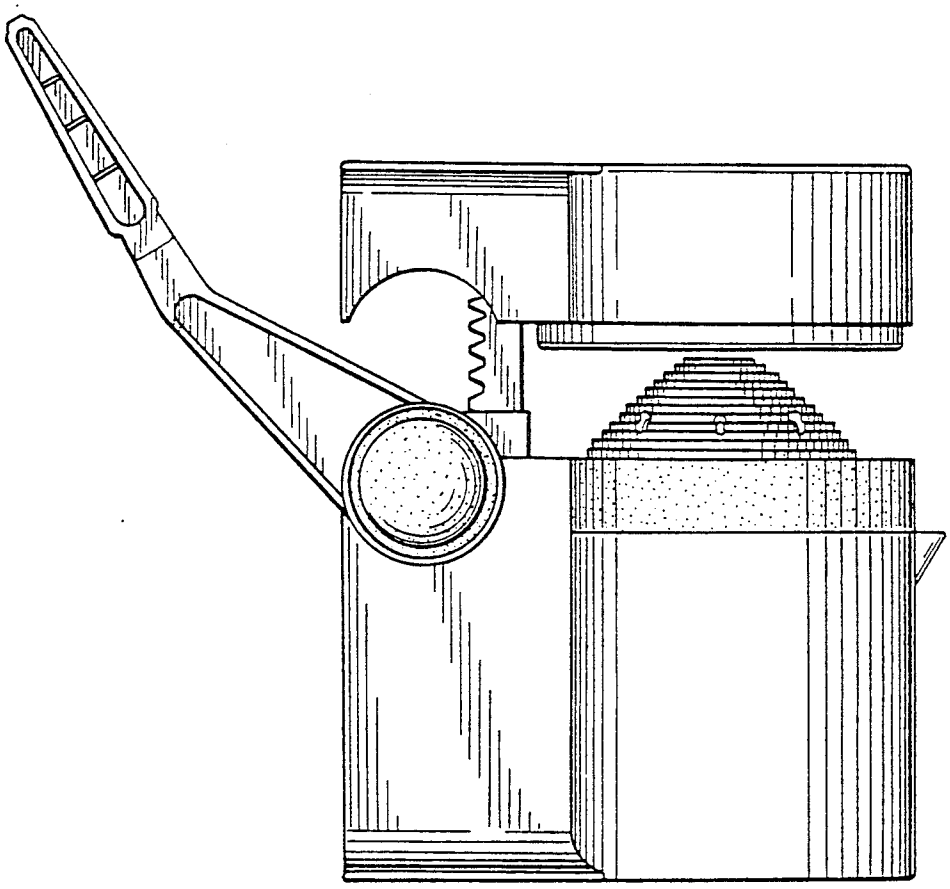

FIG. 4

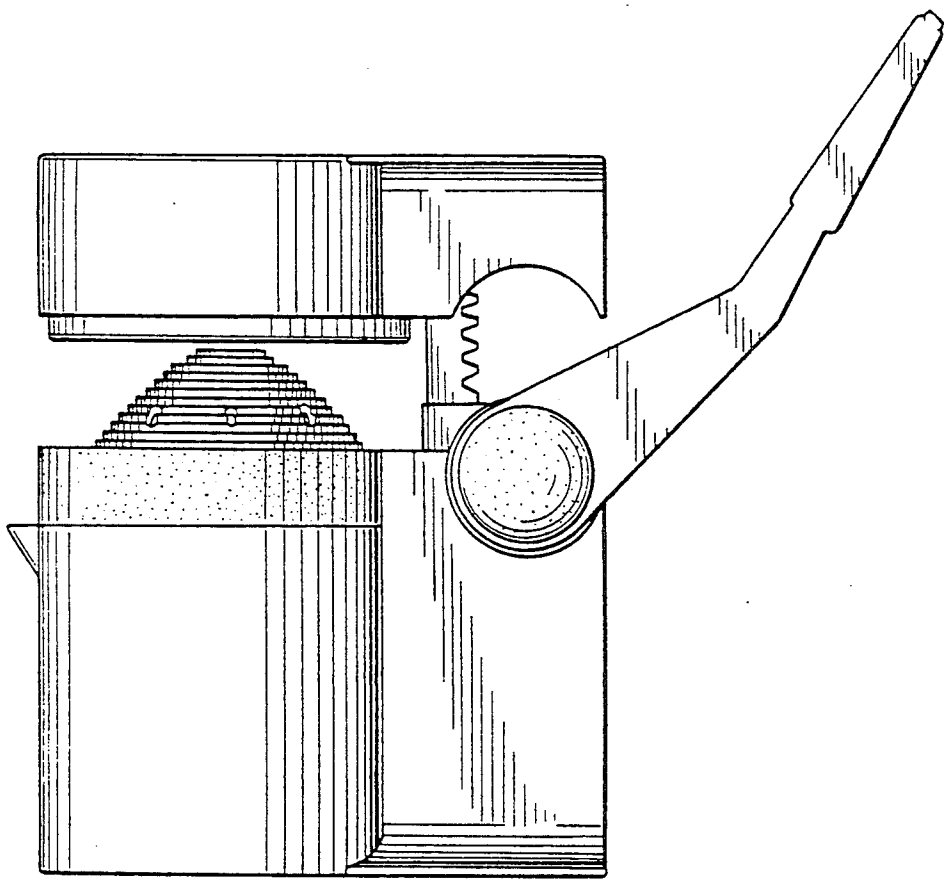

FIG. 5

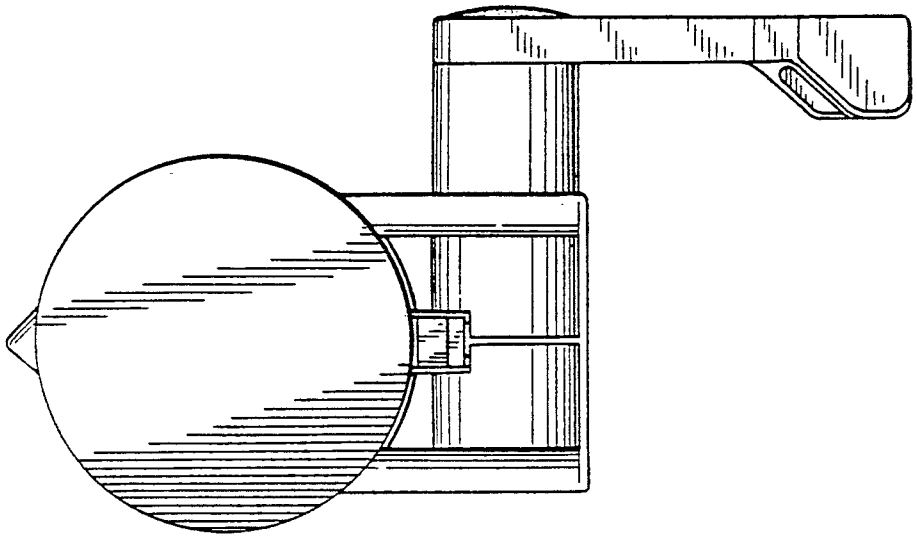

FIG. 7

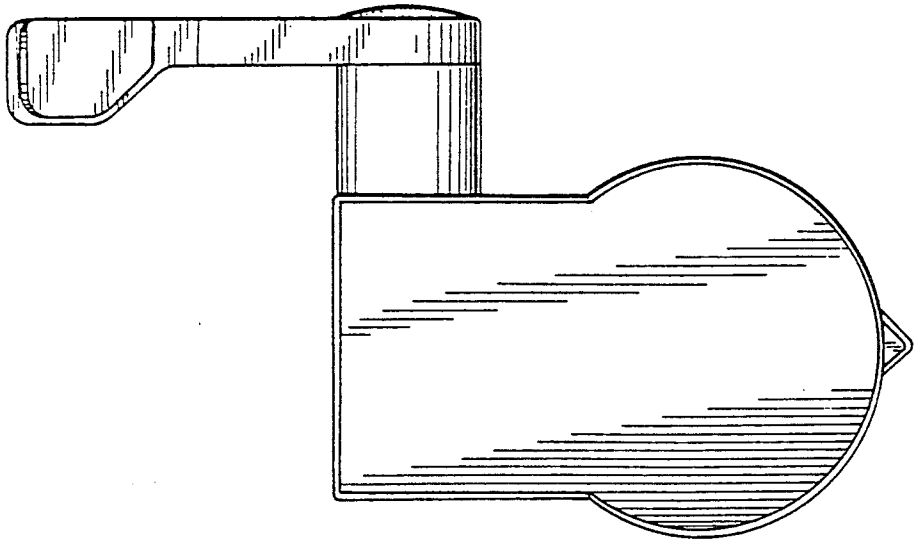

FIG. 6