(12) INTERNATIONAL APPLICATION PUBLISHED UNDER THE PATENT COOPERATION TREATY (PCT)

(19) World Intellectual Property Organization
International Bureau

(43) International Publication Date
13 April 2023 (13.04.2023)

WIPO | PCT

(10) International Publication Number
WO 2023/057208 A1

(51) International Patent Classification:
*G01B 11/25* (2006.01) *G06T 5/20* (2006.01)
*G06T 5/00* (2006.01) *G06T 7/521* (2017.01)

(21) International Application Number:
PCT/EP2022/076182

(22) International Filing Date:
03 October 2022 (03.10.2022)

(25) Filing Language: English

(26) Publication Language: English

(30) Priority Data:
21200661.3 04 October 2021 (04.10.2021) EP

(71) Applicant: **VOXELSENSORS SRL** [BE/BE]; Rue Pierre Decoster, 96, bte 1, 1190 Forest (BE).

(72) Inventors: **VAN DER TEMPEL, Ward**; Piervenshoek 19, 3140 Keerbergen (BE). **PEETERS, Johannes Willem**; Volkstraat 20, bus 201, 2000 Antwerpen (BE). **MIODEZKY, André Bernard**; Rue Edith Cavell 96, Boite 1, 1180 Uccle (BE). **MOURAD, Christian**; Avenue de la Faisanderie 8, 1332 Genval (BE).

(81) Designated States *(unless otherwise indicated, for every kind of national protection available)*: AE, AG, AL, AM, AO, AT, AU, AZ, BA, BB, BG, BH, BN, BR, BW, BY, BZ, CA, CH, CL, CN, CO, CR, CU, CV, CZ, DE, DJ, DK, DM, DO, DZ, EC, EE, EG, ES, FI, GB, GD, GE, GH, GM, GT, HN, HR, HU, ID, IL, IN, IQ, IR, IS, IT, JM, JO, JP, KE, KG, KH, KN, KP, KR, KW, KZ, LA, LC, LK, LR, LS, LU, LY, MA, MD, MG, MK, MN, MW, MX, MY, MZ, NA, NG, NI, NO, NZ, OM, PA, PE, PG, PH, PL, PT, QA, RO, RS, RU, RW, SA, SC, SD, SE, SG, SK, SL, ST, SV, SY, TH, TJ, TM, TN, TR, TT, TZ, UA, UG, US, UZ, VC, VN, WS, ZA, ZM, ZW.

(84) Designated States *(unless otherwise indicated, for every kind of regional protection available)*: ARIPO (BW, GH, GM, KE, LR, LS, MW, MZ, NA, RW, SD, SL, ST, SZ, TZ, UG, ZM, ZW), Eurasian (AM, AZ, BY, KG, KZ, RU, TJ, TM), European (AL, AT, BE, BG, CH, CY, CZ, DE, DK, EE, ES, FI, FR, GB, GR, HR, HU, IE, IS, IT, LT, LU, LV, MC, ME, MK, MT, NL, NO, PL, PT, RO, RS, SE, SI, SK, SM, TR), OAPI (BF, BJ, CF, CG, CI, CM, GA, GN, GQ, GW, KM, ML, MR, NE, SN, TD, TG).

(54) **Title:** THREE DIMENSIONAL IMAGING SYSTEM

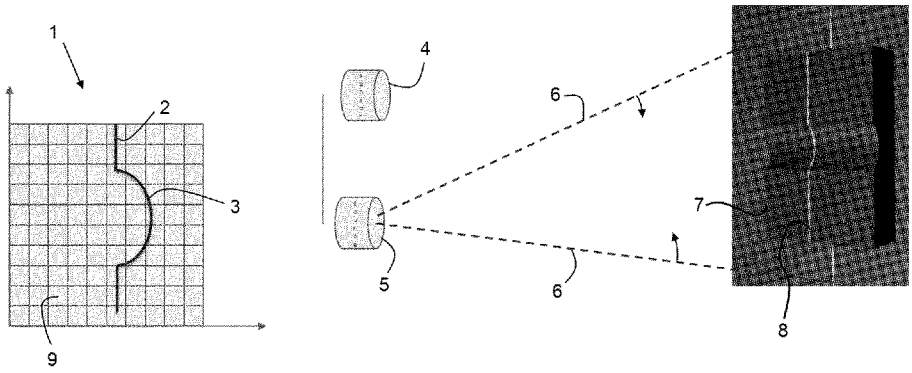


**Figure 1**

(57) **Abstract:** Depth imaging system implementing the method of any of the previous claims comprising: a. an imaging device (4) comprising a matrix of pixels (1) each pixel comprising a photodetector (9) capable of detecting single photons impinging thereon and optics able to make an image of the field of view on the matrix of pixel (1), said single photon detector having a binary logic status of true when a photon is detected and a logic status of false when no photon is detected in a timeframe; b. a projector (5) able to project a pattern in a time window of less than 10µsec, preferably less than 1 µsec; c. a controller synchronising the projector (5) time window and the imaging device timeframe; d. a logic determining, in use, the presence, during the timeframe, of contiguous pixels (11) in the true state, and calculating the depth profile corresponding to said contiguous pixels (11).

WO 2023/057208 A1

*[Continued on next page]*

**Declarations under Rule 4.17:**

— *of inventorship (Rule 4.17(iv))*

**Published:**

— *with international search report (Art. 21(3))*

# Three dimensional imaging system

## Field of the invention

[1] The present invention is related to a three dimensional imaging system.

## Background

[2] One of the state-of-the-art implementations of depth imaging system is based on structures or lines projected on the scene, which are imaged by an imaging system.

[3] In industrial applications, for example in conveyer-based systems, a fixed line is projected on a conveyor belt and the objects to be scanned are passing through the laser curtain. A high-speed imaging system (order of 1kps frame rate) is monitoring the distortions of the projected line and deducting the depth profile of the object where the line is projected.

[4] For conveyor systems, the speed of the scan along the object is defined by the speed of the conveyor which is typically slow with respect to the imaging system framerate.

[5] The same type of sensors are not suitable when the laser line is scanning a scene, for example by a 1D MEMS system projecting a moving laser line on the scene. Assuming a refresh rate of 100Hz, and a lateral resolution of 800 laser lines, the sensor system would need to image each line in 12.5us, meaning a framerate of 80kHz. This is above the technical capabilities of typical systems today.

[6] A solution to this was implemented by the first generation RealSense cameras designed by Intel. Instead of imaging each line independently, each imaging frame is looking at a collection of lines projected on the scene. With a MEMS laser scanning device sweeping the scene with a laser line at 10kHz for example, the line is passing the field of view 100 times each 10ms. The laser line power is modulated or pulsed in such a way that the illumination device is projecting a set of lines which are imaged together.

[7] A downside is that the sensing speed and delay is no longer defined by the illumination but still by the sensor system which imposes the framerate to the system.

[8] Additionally, sufficient illumination power is needed to operate this system in strong ambient light conditions such as outdoor environments.

[9] This invention formulates an optimized sensor to maximize performance of the laser line scanning system, by being able to image a line using an exposure of only 10's of nanoseconds while minimizing the optical power requirements even in ambient light conditions.

## Summary of the invention

[10] A first aspect of the present invention is related to a method for determining the depth profile of a field of view comprising the steps of:

- projecting by means of a projector (5) at least one light pattern onto the field of view, the projection occurring in a time window of less than 10µsec, preferably less than 1µsec ;
- imaging the projected pattern by means of a camera sensor (4) and optics, synchronised with the projection of the pattern during at least one observation window within said time window, said camera sensor comprising a matrix of pixels (1), each comprising a photodetector, said pixels (9) being in a false status when no light is detected by the corresponding photodetector, and in a true status when light is detected by the corresponding photodetector thereby obtaining a first binary matrix of pixels representing the field of view;
- separating the projected pattern from an ambient light noise (10) on the binary matrix of pixels by considering only pixels in the true status having at least one neighbour pixel also in the true status on the matrix of pixel (1) obtained in one observation or a combination of the at least two observations within said time window thereby obtaining a second binary matrix of pixels representing the projected pattern;

- based on triangulation between the projector (5) position, the camera (4) position and the second binary matrix of pixel calculate the depth profile corresponding to the projected pattern;
- scan the projected pattern by repeating steps a to d on the entire field of view for determining the depth profile on the entire field of view;

wherein each isolated elements of the pattern is extending in the binary representation on at least two contiguous pixels.

[11] Preferred embodiments of the method of the invention comprise one or a suitable combination of more than one of the following features:

- the projected pattern comprises at least one continuous line, the step of separating the projected pattern from the ambient noise by only considering true pixels forming at least one continuous line;
- more than one continuous lines are projected simultaneously;
- the projected continuous line is a straight line, sequentially scanned on the entire field of view or on a partial part of it forming a region of interest;
- the straight line is oriented in a predetermined direction, the step of separating line from the ambient noise using the predetermined direction for analysing a probability of a neighbour pixel being part of the projected straight line;
- the probability of a pixel being part of the projected pattern is determined by a trained neural network;
- the displacement of the projected pattern between two successive projections is corresponding to less than one pixel width, the depth resolution being improved by interpolation of the determined depth between successive line scans.
- the projected line is produced by moving at least one laser beam on the field of view;
- each photodetector comprises a single photon detector.

[12] A second aspect of the invention is related to a depth imaging system implementing the method of the invention:

- an imaging device comprising a matrix of pixels each pixel comprising a photodetector able to detect single photons impinging thereon and optics

able to make an image of the field of view on the matrix of pixel, said single photon detector having a binary logic status of true when a photon is detected and a logic status of false when no photon is detected in a timeframe;

- a projector able to project a pattern in a time window of less than 10µsec, preferably less than 1 µsec;
- a controller synchronising the projector time window and the imaging device timeframe;
- a logic determining, in use, the presence, during the timeframe, of contiguous pixels in the true state, and calculating the depth profile corresponding to said contiguous pixels.

[13] Preferably, the projector is arranged to project the lines in a predetermined direction for improving line detection by the logic.

[14] Advantageously, the matrix of pixel comprises a first layer comprising the single photon detector and a second layer comprising a neighbourhood testing circuit, the neighbourhood testing circuit being arranged so that the output of the second layer circuit being true only if the corresponding single photon detector and at least one adjacent single photon detector are simultaneously in true status, thereby determining which pixels have at least one contiguous pixel in the true logic status.

## Brief description of the figures

[15] Figure 1 represents an ultra-fast line scanner according to the invention.

[16] Figure 2 a to d represents lines can pixelisation in line scan spatial dithering conditions.

[17] Figure 3 represents the results of interpolation of the position of the line scan of figure 2 along the line A-A.

[18] Figure 4 represents results of random spatial dithering to estimate subpixel resolution.

[19] Figure 5 represents results of estimate subpixel resolution by known dot movement.

[20] Figure 6 represents line scan interleaved motion.

[21] Figure 7 and 8 represents projections of different patterns instead of a simple line.

[22] Figure 9 represents a two layer imaging sensor.

Figure keys

1. Image sensor (pixel matrix)
2. Laser line
3. Deformed laser line
4. Camera (including sensor and optics)
5. Laser projector
6. Laser beam (limits of the linsescan)
7. Object to be scanned
8. Projected line
9. Individual pixel
10. Pixel detecting noise from ambient light

300. Time window for spatial dithering
301. X direction spatial range of dithering (projector)
303. X direction pixelization
312. Real line position
314. hit distribution (sum of instantaneous measured positions over time scan)
315. average position of the measured position
322. Spatial distribution of moving dot
324. hit distribution
325. average position of the measured position
400. Field of view
401. Dot pattern
402. Dot pattern
403. Cross pattern
404. Circle pattern
411. pattern projector
412. Light source
413. imaging plane such as a diffraction grating
414. mirror

**Detailed description**

[23] The invention described below proposes a system that is able to image a 3 dimensional scene at high speeds. To that aim, the system projects a light pattern such as a line on the scene at high frequency, the pattern being displaced between each shot to be able to reconstruct the entire scene.

[24] As an example, let's assume a 1-axis oscillating MEMS projecting a laser line, sweeping this laser line across the field of view (FoV) at 1kHz to 10kHz, meaning that in a period of 100us to 1ms the complete scene or FoV is sensed.

[25] With as an example 1000 line pulses per oscillation period, each line needs to be imaged with the imaging system each meaning 100ns to 1us per line (Tline)

[26] To achieve a sensor or imaging system that is capable of imaging a line in the scene each Tline in the presence of ambient light, a sensor system was used.

[27] The invention is related to depth imaging system comprising a sensor, said sensor comprising an array of pixels, each pixel being capable of detecting single photons, for example by means of single-photon avalanche diode (SPAD).

[28] The sensor is preferably synchronised with a pulsing laser line (or pattern), so that the sensor knows when to expect photons from each projected laser line. The pixels are activated during a short observation window, preferably ranging from one nanosecond to 100s of nanoseconds. During this observation window, the single photon detector pixels trigger or change state when a photon is detected. Photons detected will not only originate from the laser line energy, but also from ambient light present in the scene.

[29] To identify the location of the laser line, a coincidence imaging method is proposed, which only considers the triggering of a pixel a valid trigger, when neighboring pixel or pixels have also triggered during the observation window. Because ambient light will trigger all the pixels in a statistical manner, the chance of neighbouring pixels firing during the short observation window due to ambient light can be minimized, while the pulsed optical energy of each laser line can be designed in such a way that neighbouring pixels, connected along the line, have a high probability of firing together. In such a way the laser line can be easily isolated in the noisy binary image.

[30] In a first embodiment, shown in fig. 2 the region of interest (ROI) is read out column by column or row by row, and the pixel map is built to identify

the location and shape of the line. Since we know the line is continuous and piece-wise continuous, this can be used as a constraint to identify which pixels are part of the line. For example, an isolated pixel event is likely not part of a piece-wise continuous structure. Additionally, another constraint can be that when considering a vertical line as projected structure, in the detected ROI map, 2 separate events in the same row, must be either adjacent - in which case the line is detected on the boundary of or partially covering the adjacent pixels, in which case we can apply some super-resolution - or in the case the detected events are not adjacent, only 1 of the pixels will have a line-connected event and the other pixel will have a random event. By looking at the events in the next or previous row, 1 can get additional information as to which event was the true event, since we expect true events to be connected in piece-wise linear fashion in the vertical dimension - since we are projecting a vertical line.

[31] A similar description can be built in the other dimension where we are projecting a horizontal line.

[32] By constraining the projected line to a vertical or horizontal shape, it becomes easier to define an expected region of interest to be read out, reducing the number of pixels to be read and analysed each line-shot. The ROI is then defined by the maximum disparity one wants to allow in the system.

[33] Of course, any orientation of the line could be applied if one does not have this limitation, for example this is applicable in massively parallel connected processing in the case of stacked systems, where the pixel plane is connected in a parallel fashion to the processing layer, rather than by busses such as typically is the case in image sensors.

[34] A second aspect of the invention is related to a stack devices, whereby a first layer includes the photon detectors such as the SPAD array as well as some optional electronics to control the SPAD array and pixels, possibly quenching resistors or circuits, and whereby a second layer, parallelly connected to the first layer by means of 1 or more electrical connections per detector or detector group. The second layer processes the information coming the first layer. In a first variation, the coincidence imaging as well as the line detection is performed by logic in the second layer.

[35] In another variation, a massive parallel connection connects the SPAD array with a neural network which computes the location of the line segments in the raw data image, whereby the neural network is trained to distinguish between noise and line information.

[36] Figure shows a sequence of lines in the case of horizontal resolution of 10 lines each oscillation period of the line scanner. At T0 to T4 the laser line is moving from left to right, which we can call the sweep-right lines, while from T5 to T9 the laser line is moving from right to left, the sweep-left lines, in this figure in an interleaved fashion, creating a resolution of 10 in the horizontal direction each period of the line scanner.

[37] Other embodiments can be created where the positions of the lines of the sweep-left and sweep-right coincide, reducing the horizontal resolution of the depth image but increasing the temporal resolution on those line samples.

[38] In case of 500 sweep-right lines and 500 interleaved sweep-left lines, or vice-versa, the full line resolution per period becomes 1000.

[39] This means that each 100us, 1000 lines need to be constructed, and thus approximately every 100 nanoseconds the ROI needs to be read. When combined with a SPAD pixel array or a quanta image sensor with limited bit depth, this requirement is feasible.

[40] Alternatively, the pixel array in its entirety or a region of interest of the array, is connected in parallel to a process plane. For example in stacked sensor devices, the pixel array or sensor array which is sensitive to the optical input can be positioned on a first plane, with each pixel connected by means of an interconnect method to the processing layer physically located on a second plane of the sensor.

[41] In this case, we can describe a processing element or neural network that is connected to the active ROI or complete pixel array and is capable of finding the line or piece-wise lines in a noisy image with random events or pixels data and events or pixel data connected to the line of interest.

[42] Coincidence can be applied on the ROI after reading out each individual pixel, or in the pixel area itself.

[43] The line will be moving each timestep at subpixel resolution as shown in drawing 2. By analyzing the triggered pixel positions of the previous detected lines, a better estimate can be obtained at given timestamps by subresolution. This impose of course constraints on the spatial frequency of the object we are detecting.

[44] It however creates a method for superresolution by considering the temporal behaviour of the line movement.

**Super resolution by special (structural) dithering, to increase depth accuracy**

[45] In traditional dot-pattern active stereovision systems, the dots are static in space. If the scene is not moving the dots have a fixed position on the scene and thus in the image. The spatial quantization by sampling the scene with an imager with certain spatial resolution, imposes limitations on the depth estimation. In the article "Noise in Structured-Light Stereo Depth Cameras: Modeling and its Applications" by A. Chatterjee et Al. ( https://arxiv.org/pdf/1505.01936.pdf) the noise of a stereo system is described

$$\frac{\partial D}{\partial Z} = -\frac{fB}{Z^2} \quad \Rightarrow \quad \frac{\partial Z}{\partial D} = -\frac{Z^2}{fB}$$

[46] The delta depth is linear with the delta disparity. This means that the quantization of the disparity limits the accuracy of the depth estimation.

[47] In this invention, the limitation of the disparity quantization because of pixel pitch is mitigated, by means of a spatial dithering. By constructing the depth estimation from a collection of neighboring, related measurements at slightly different locations in the scene, the depth estimation can be improved. This idea is similar to the idea of quantization with a 1-bit AD convertor and dithering. If the dithering noise is white and surpass the quantization, by means of averaging of the end results, a better estimate can be created. The same applies to this spatial dithering concept, whereby the pixel is quantizor and the moving dot is the spatial dither. If the spatial dither surpass the pixel quantization in terms of amplitude, and the distribution of the dither is known (it is, because

the system controls the light) a more accurate subresolution measurement can be obtained.

[48] The invention builds further on the possibility of extremely fast sensing - almost continuous - , whether it is a line, a dot or a dot pattern.

[49] The idea is to impose on the illumination a known spatial probability.

[50] In the case of a single point or dot, or dot pattern - multiple points projected in parallel. For the sake of clarity I will focus on a single point, but this method extends to any projected structure :

[51] If we are able to track the position of the dot (or structure) with very high speed, we can built super-resolution by spatial dithering.

[52] We impose a known spatial probability distribution on the location of the dot in for example the horizontal direction. This can be a uniform probability distribution, or gaussian, or any other function, but preferably a smooth distribution.

[53] Figure 4 shows a location dithering method.

[54] In figure 4(a) the dot position is changed - dithered - across a certain location range 301 during a time window 300. Accumulating the probability distribution of the location x of the dot during this time window 300, a probability density function 312 can be found.

[55] The pixel array will sample this function on discrete moments in time using pixels 303 with finite size creating a quantization. This quantization creates a histogram 314. By monitoring the dithered x location during a period of time 300, an average location 315 can be computed from the histogram 314, which is more accurate than if the dot with a static location would be observed by the quantizing pixels. In such a way, the accuracy of the average dot location can be obtained with greater resolution.

[56] The principle can be extended to for example quite simple spatial dithering or distributions such as in Figure 5

[57] A third aspect of the invention is related to a method for determining the depth profile of a field of view, similar to the method according to the first aspect. However, step c (separating) is optional, since the method of determining the depth profile may also be performed with other filtering steps as understood by the skilled person. A fourth aspect of the invention is related to a method for determining the depth profile of a field of view, similar to the method according to the first aspect. However, step b comprises imaging by means of two cameras, each having a matrix of pixels, and step d comprises triangulation based on the positions of the two cameras and the two matrices of pixels. The skilled person appreciates that triangulating data of two cameras or of one camera and one light source is conceptually similar. A fifth aspect of the invention is related to a depth imaging system, preferably implementing the method of the third and fourth aspects.

[58] Preferably, the projector projects a simple structure such as an ellipsoid or circular dot onto the scene and scans the scene in a raster, Lissajous or another pattern.

[59] Preferably, each camera is adapted to track the position of the dot in each of the image planes and output a stream of (x, y, t) data where x, y are coordinates in the image plane (pixel dimension) and t is the timestamp of the detection. This is advantageous in allowing to output such streams with a temporal resolution up to 10 nanoseconds. For example, Fig. 10 shows the laser-based illumination continuously sweeps the world in fast strokes. A Lissajous pattern is generated based on a fast 2D MEMS mirror. Two or more sensors snapshot the position of the laser dot at a very fast rate (up to 100 MHz). Each sensor sends out the laser dot position, after which a simple triangulation algorithm allows to compute precise 3D shape, position, contour, and motion at said very fast rate.

[60] The methods and systems of this invention are advantageous for a few reasons as summarized below. The first advantage is related to power. Here, a single dot (or a set of dots) is projected at a time, bundling all the energy to sample a certain location in the scene in the shortest time possible, obtaining the best immunity to ambient light for the lowest photon budget. The required photon budget to be able to sense the dot however depends on the sensing technology

used. For example, it is possible to detect a dot with just 12 photons, distributed on 2 pixels (6 photons/pixel). Furthermore, the shorter the time needed to produce a return of 6 photons per pixel, the better the immunity to ambient light. Therefore, this system preferably uses short high power pulses.

[61] Additionally, because power can be varied rapidly while scanning, it is possible to create a frame where the laser power is dynamically allocated. For example, distant or dark objects can be illuminated with greater laser intensity, while objects close at hand can be illuminated with lower laser power. This can be modulated within a scan and can be optimized to maintain class-1 eye safe limits while optimizing system range, power consumption, and scan density.

[62] In another example, in nearfield regions, the system can increase pulse density and reduce pulse intensity to achieve a more precise mesh. In more distant regions, the system can reduce pulse density and increase pulse intensity to achieve a useable signal. The product of pulse density and intensity can be maintained under class-1 eye safe constraints if desired, or could be further reduced at times when power consumption concerns outweigh scan density needs. The scan pattern does not need to be altered to produce these varying-density scans.

[63] A second advantage of this invention is related to bandwidth. Scanning depth sensing systems offer a unique advantage in the way the depth data is represented and transmitted. The depth data can be represented as a series of x, y, z points, as expected from any point cloud representation. However, chronologically, the points in the point cloud are created along a defined laser beam trajectory. As such, the points along the trajectory are typically 'connected' in a certain way, influenced by the scene itself. The fact that the points or samples are connected along a trajectory can be leveraged in the data representation. Instead of outputting each sample individually, the trajectory can be described with a limited set of coefficients and 2 points describing the start and stop of the polynomial descriptor. This enables 'live' compression, greatly reducing the bandwidth requirements from sensor to system as well as memory and compute requirements for further processing.

[64] A third advantage of this invention is related to immunity. Laser beam scanning based systems using the sensors of this invention offer best-in-class immunity to concurrent active systems. Using a laser beam scanning approach, the depth information is obtained by triangulating single point pairs in the respective image spaces tracking the dot. As such, the introduction of additional systems in the environment will create additional dots scanning the scene. When the sensors used to track the dot are capable of tracking multiple dots, the additional optical information created by the additional scanning dot, will just contribute to the depth data being obtained as another point pair that can be triangulated.

[65] Laser beam scanning systems have also immunity to flood systems (active stereo, mono NIR with flood, iToF). The system is capable of suppressing the influence from ambient light by imposing requirements on the photon statistics and behaviour of the projected dot. Flood illumination resembles in terms of statistics and behaviour to ambient light: it does create high peak flux (energy/pixel/time) and requires typically several hundreds of microseconds to milliseconds to get some integrated signal in the pixels, while not having any spatio-temporal structure. For example, the system uses a combination of photon statistics, beam shape, and beam spatio-temporal movement to distinguish signal from ambient /flood sources and optical signal origination from the laser beam scanning system itself.

[66] Laser beam scanning systems have also immunity to dot pattern projectors. Two elements distinguish a Structured Light system using dot patterns from dynamic Laser beam scanning structured light. Firstly, the dot pattern is static and will not have any moving behaviour or trajectories. Secondly, the available optical power is spread between 10k or so dot in parallel, meaning that the allocated peak power per dot is significantly less than the allocated peak power in the Laser beam scanning system. Thirdly, the structured light projectors are designed to work together with global shutter imagers, which have typical exposure times in the order of 100s of microseconds. The energy required to see the dots is thus spread in the exposure window.

[67] A fourth advantage of this invention is related to latency. The system uses a fully serialized sensing method, where the data is produced serially as the beam scans the field of view. The time needed between the optical sampling of the scene (projection of a dot on a certain surface) and the production of the depth data corresponding to that sample is very short, since the method relies purely on the following. First, the sensing of the dot location in the different image spaces: using this system of this invention can be in the order of 10 nanoseconds. Second, the transfer of the coordinates to the sensing host: N clock-cycles, typically 100's of nanoseconds. Third, filtering method using historical data and triangulation of the point in space, which can be pipelined math operations in 100's of nanoseconds.

[68] The resulting latency from optical sample to depth measurement is thus extremely short. Of course, to obtain a sample of the complete scene, the laser beam still needs to scan the desired field of view with a desired density. Depending on the scan speeds of the Laser beam scanning and the desired density for the application, a certain data aggregation window can be considered. In contrast to frame-based sensors, there are no frame buffers to consider which add to the overall sensing latency.

[69] An interesting feature of laser beam scanning sensing technology is that an application-customized trade-off can be selected with optimal density versus refresh rate. This is entirely due to the sequential nature of the system, as sensing data is produced sequentially. Depending on the data aggregation window applied on the data stream, the scanning dot will have created a sparse or dense pattern of scan lines during the window.

[70] Algorithms requiring fast update rates (500Hz) using sparse data can run in parallel from algorithms requiring normal update rates (50Hz) using dense data, utilizing the same data stream as input. Figs. 11 – 14 show the aggregated scan lines using 2 millisecond, 5 millisecond, 10 millisecond, 20 millisecond aggregation windows applied to the same data stream. The LBS frequency pair for the 2D oscillating MEMS structure used to obtain the simulated scan lines are (8174Hz, 5695Hz).

[71] Using SPADs in the pixels is advantageous because it is sensitive to a single photon, which means that the active projected structure will need a minimum amount of energy since the detector is single photon sensitive. Another advantage is sub-ns response time, meaning the photon is detected and encoded into a digital signal in nanoseconds.

[72] The system is able to filter out the false positives created by thermal noise and ambient light impinging on the sensor area. Fig. 15 shows (a) the ground truth, (b) raw detections, and (c) filtered detections. A first filtering step is happening inside the pixel plane, meaning this filter operates in parallel on each of the pixels. Typically this filter exhibits either a spatial filtering method, a temporal filtering method, or a combination thereof. These filters can be implemented using transistor level, RTL, more complex compute architectures, neural networks or other.

[73] The system relies on two basic principles for filtering in the pixel plane. The first principle is spatial. By imposing a certain shape on the projected dot we can constrain the pixel to only flag a valid detection when the impose kernel was detected within a specified time. For example, a 2x1 kernel can be imposed, meaning that the projected dot must span at least 2x1 pixels. When shooting optical pulses of length tp, the constraint imposed on the pixels will be that a cluster of 2x1 pixels must fire within tp in order to consider the detected photons to come from the active projection. This principle is referred to as coincidence.

[74] A second principle is spatio-temporal. We can impose that the trajectory of the dot is continuous, provided the pulse repetition frequency is higher than the dot displacement velocity. For example, in case of 1ns pulses repeated every 40ns, a temporal window of 41ns will be able to catch 2 pulses. By imposing that the pixel (or pixel cluster) must see at least 2 pulses in the 41ns window we can filter out a significant portion of the detected ambient photons, since the ambient light photon statistics have a low chance to generate 2 consecutive detections in s 42ns window. This principle is referred to as persistence. By applying a combination of both coincidence and persistence, a

powerful filtering strategy is created which is quite efficient in terms of hardware implementation.

[75] After the in-pixel-plan filtering, the fastest way to output the array data is to compress it, for example by means of projection onto the axis of the imager. In order to support multi-dot scanning and to reduce the aliasing after projection, the imager is first divided, for example, into 16x16 tiles of 64x64 pixels whereby each of the tiles can output its projections to the digital logic typically on the periphery of the device. The projection operation creates 2 vectors (times NxN tiles), 1 vector each for the row and the column projections.

[76] It is to be noted that the creation of the vectors based on the projection data is the step which takes the data from the asynchronous domain inside the pixel array to the synchronous domain at the periphery. While the inpixel filtering can be implemented synchronously, it is not required. As such, the vectorization of the projections is discretizing the data in time, for instance every 10ns a new vector is created based on the projection events coming in during those 10ns.

[77] As shown in Fig. 16, when plotting these vectors over time, a new image is formed, which starts showing the trajectory of the projected dot or structure (d, e). This 'image' can again be processed and filtered to create a filtered projection-time dataset (d', e') for each of the projections. These directly yield then x, y data for each timestep (x, y, t).

[78] Further embodiments and relevant disclosure can be found in patent applications nr. PCT IB2021 054688 "Pixel sensor system", # PCT EP2021 087594 "Neighborhood-gated switching pixel sensor", PCT/IB2022/000323 "Pixel array with dynamic lateral and temporal resolution", and PCT/IB2022/058609 "Persistence filtering in SPD arrays", the disclosures of which are incorporated by reference.

[79] As discussed above, the displacement of the projected pattern between two successive projections is corresponding to less than one pixel width, the depth resolution being improved by interpolation of the determined depth between successive line scans. However, this is not to be understood as limited to line scans, as said interpolation can work equally well when using dot scans.

## Claims

1. Method for determining the depth profile of a field of view (7) comprising the steps of
    a. projecting by means of a projector (5) at least one light pattern onto the field of view, the projection occurring in a time window of less than 10µsec, preferably less than 1µsec ;
    b. imaging the projected pattern by means of a camera sensor (4) and optics, synchronised with the projection of the pattern during at least one observation window within said time window, said camera sensor comprising a matrix of pixels (1), each comprising a photodetector, said pixels (9) being in a false status when no light is detected by the corresponding photodetector, and in a true status when light is detected by the corresponding photodetector thereby obtaining a first binary matrix of pixels representing the field of view;
    c. separating the projected pattern from an ambient light noise (10) on the binary matrix of pixels by considering only pixels in the true status having at least one neighbour pixel also in the true status on the matrix of pixel (1) obtained in one observation or a combination of the at least two observations within said time window thereby obtaining a second binary matrix of pixels representing the projected pattern;
    d. based on triangulation between the projector (5) position, the camera (4) position and the second binary matrix of pixel calculate the depth profile corresponding to the projected pattern;
    e. scan the projected pattern by repeating steps a to d on the entire field of view for determining the depth profile on the entire field of view;

    wherein each isolated elements of the pattern is extending in the binary representation on at least two contiguous pixels.
2. Method according to claim 1 wherein the projected pattern comprises at least one continuous line, the step of separating the projected pattern from

the ambient noise by only considering true pixels forming at least one continuous line.

3. Method according to claim 2 wherein more than one continuous lines are projected simultaneously.
4. Method according to claim 2 or 3 wherein the projected continuous line is a straight line (8), sequentially scanned on the entire field of view or on a partial part of it forming a region of interest.
5. Method according to claim 4 wherein the straight line is oriented in a predetermined direction, the step of separating line from the ambient noise using the predetermined direction for analysing a probability of a neighbour pixel being part of the projected straight line (8).
6. Method according to any of the previous claims wherein the probability of a pixel (9) being part of the projected pattern is determined by a trained neural network.
7. Method according to any of the previous claims wherein the displacement of the projected pattern between two successive projections is corresponding to less than one pixel width, the depth resolution being improved by interpolation of the determined depth between successive line scans.
8. Method according to any of the claims 2 to 7 wherein the projected line is produced by moving at least one laser beam on the field of view.
9. Method according to any of the previous claims wherein each photodetector comprises a single photon detector (9).
10. Depth imaging system implementing the method of any of the previous claims comprising:
    a. an imaging device (4) comprising a matrix of pixels (1) each pixel comprising a photodetector (9) capable of detecting single photons impinging thereon and optics able to make an image of the field of view on the matrix of pixel (1), said single photon detector having a binary logic status of true when a photon is detected and a logic status of false when no photon is detected in a timeframe;

b. a projector (5) able to project a pattern in a time window of less than 10µsec, preferably less than 1 µsec;

c. a controller synchronising the projector (5) time window and the imaging device timeframe;

d. a logic determining, in use, the presence, during the timeframe, of contiguous pixels (11) in the true state, and calculating the depth profile corresponding to said contiguous pixels (11).

11. Depth imaging system according to claim 10 wherein the projector (5) is arranged to project the lines (8) in a predetermined direction for improving line detection by the logic.

12. Depth imaging system according to claim 10 or 11 wherein the matrix of pixel (1) comprises a first layer comprising the single photon detector and a second layer comprising a neighbourhood testing circuit, the neighbourhood testing circuit being arranged so that the output of the second layer circuit being true only if the corresponding single photon detector and at least one adjacent single photon detector are simultaneously in true status, thereby determining which pixels have at least one contiguous pixel in the true logic status.

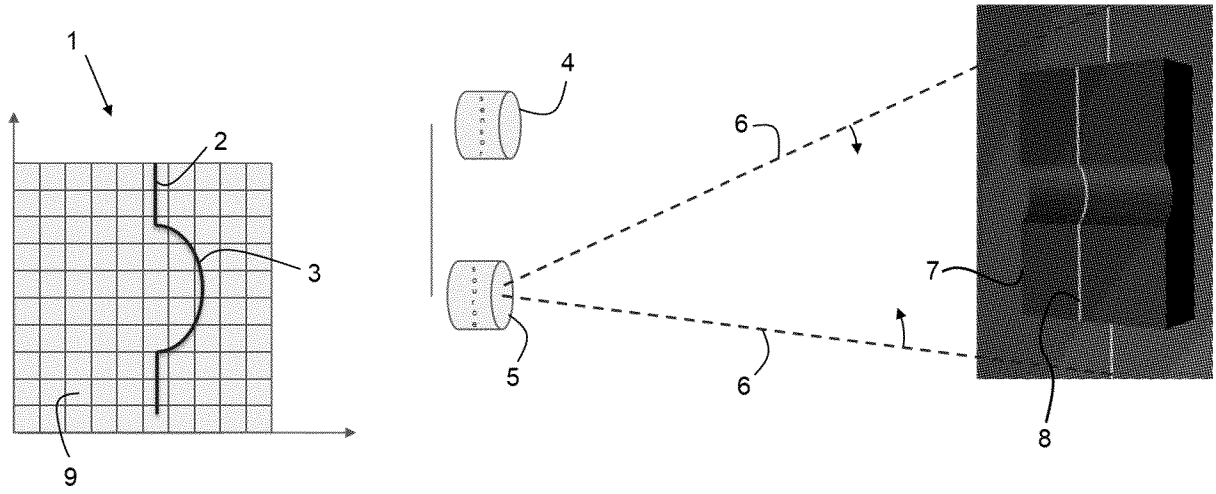


Figure 1

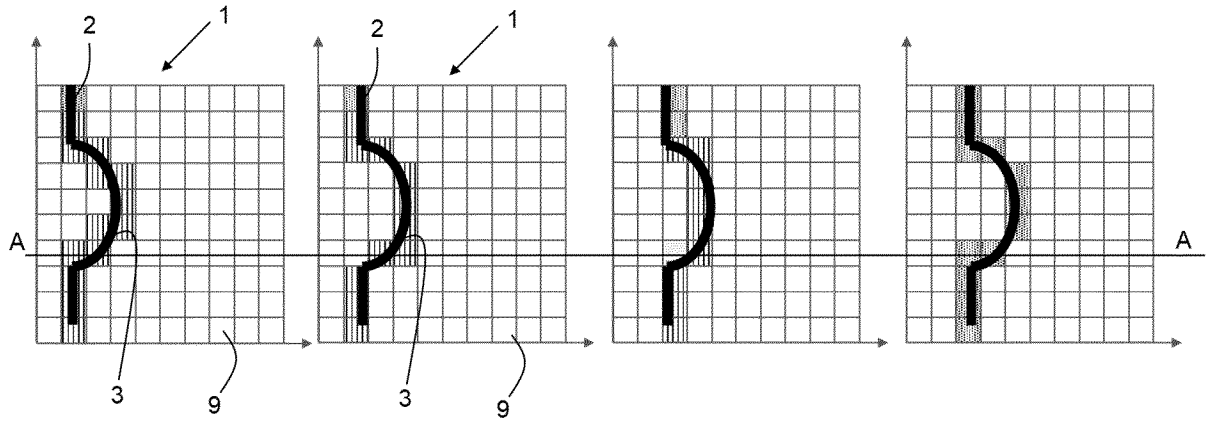


Figure 2

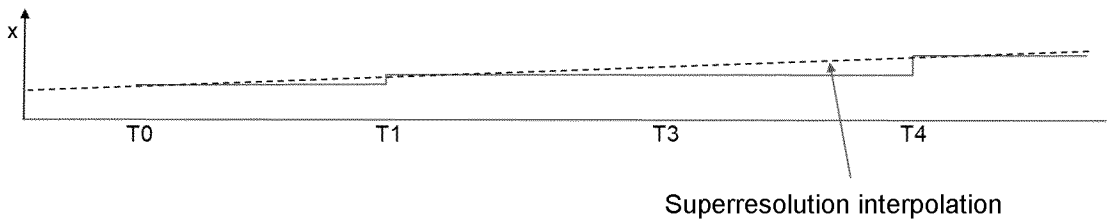


Figure 3

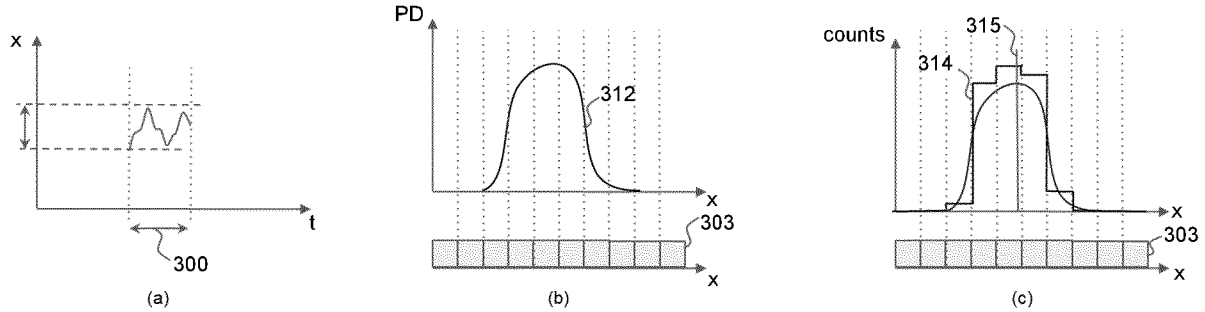


Figure 4

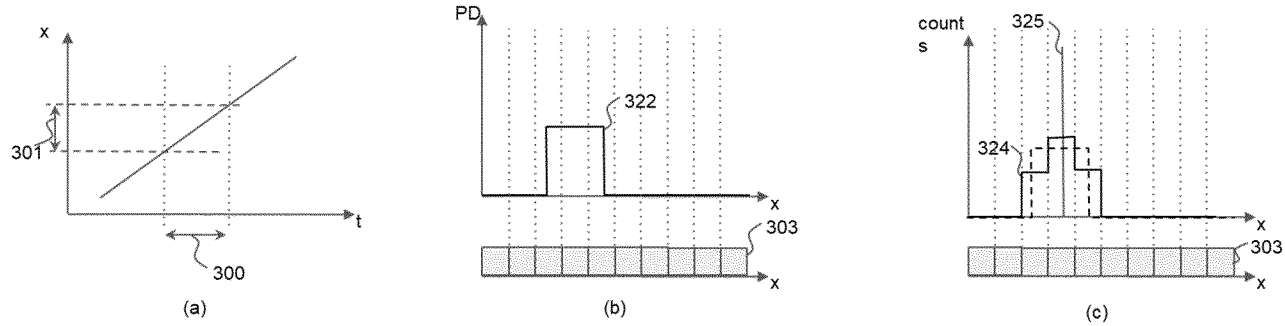


Figure 5

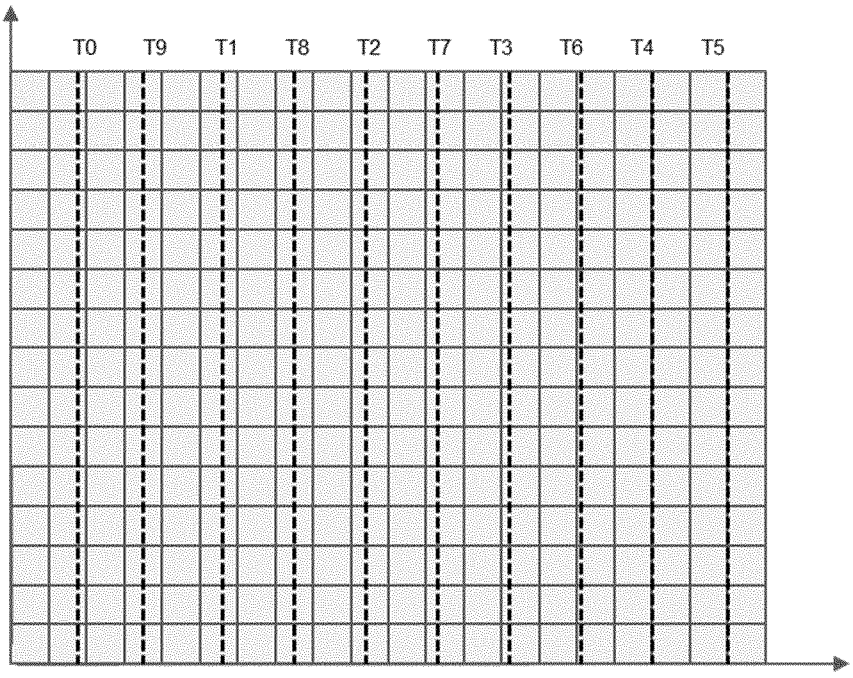


Figure 6

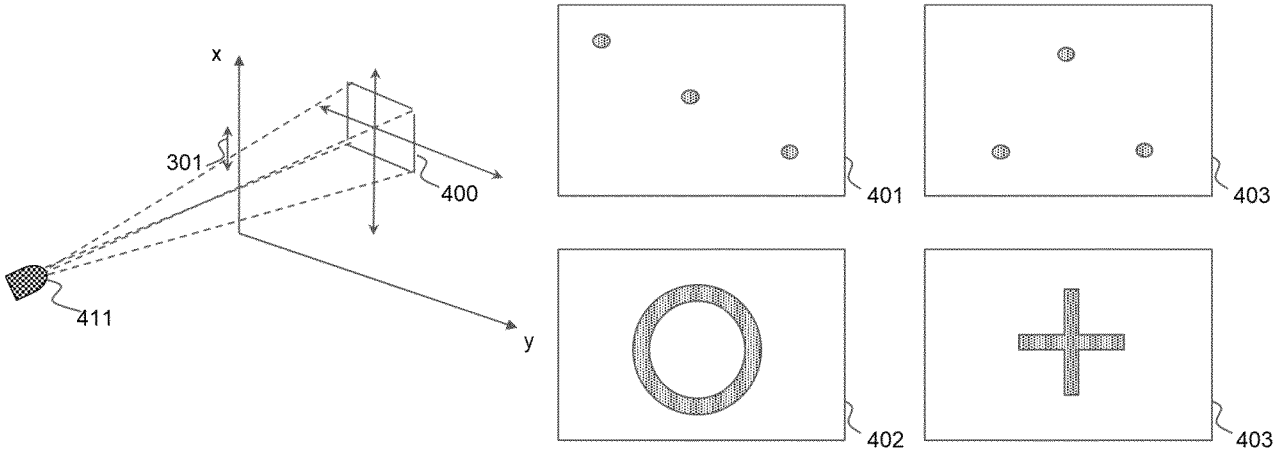


Figure 7

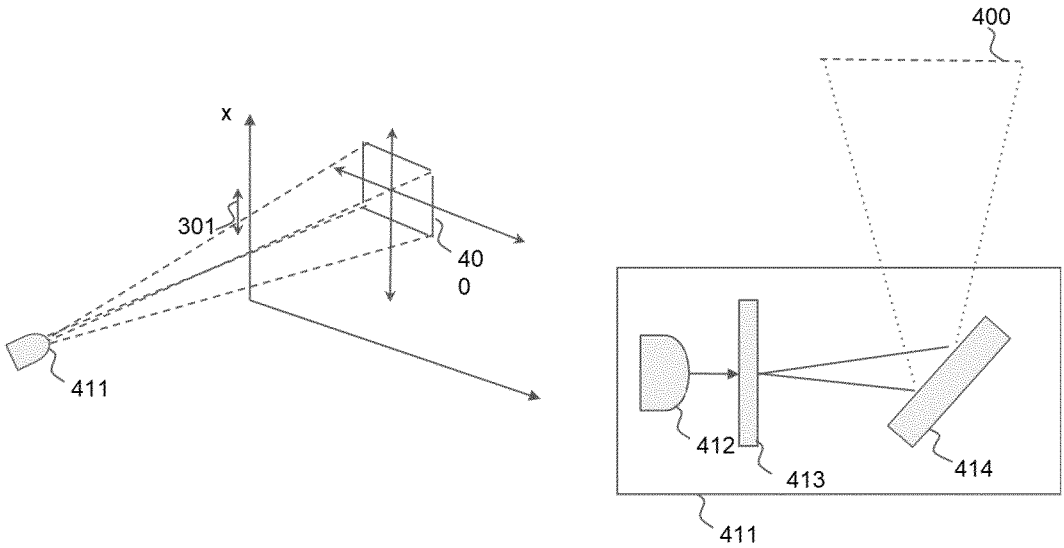


Figure 8

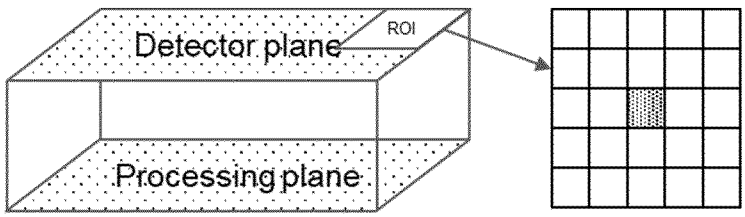


Figure 9

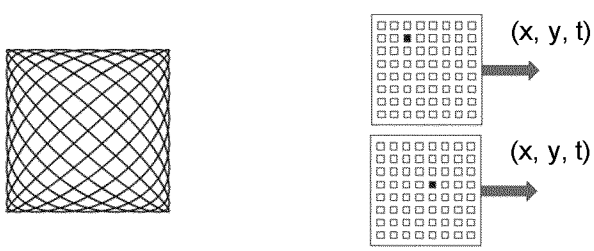


(a) (b) (c)

Figure 10

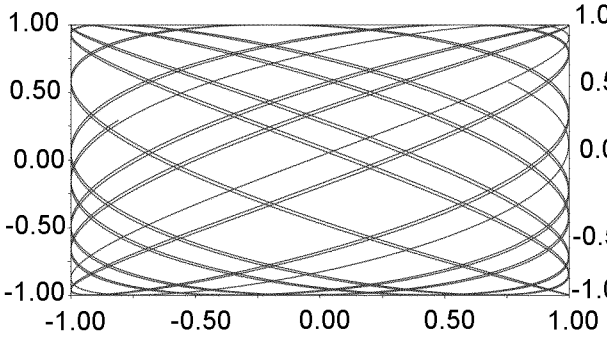


Figure 11

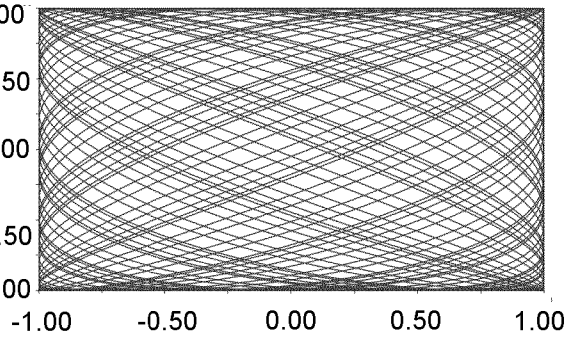


Figure 12

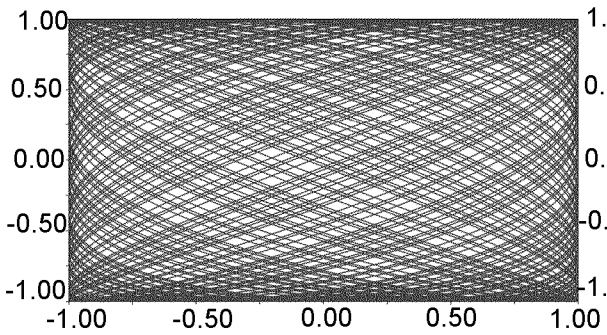


Figure 13

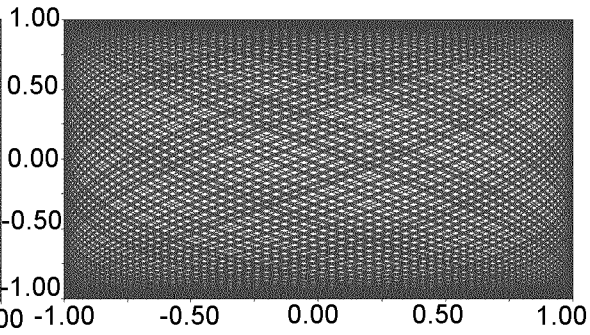


Figure 14

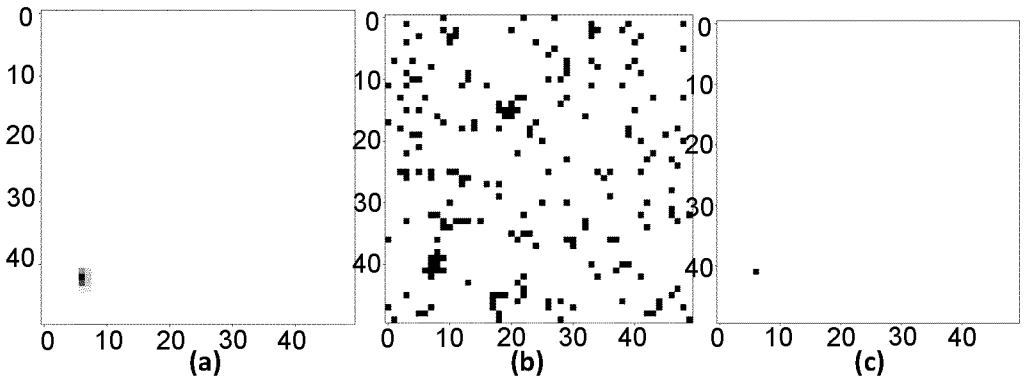


Figure 15

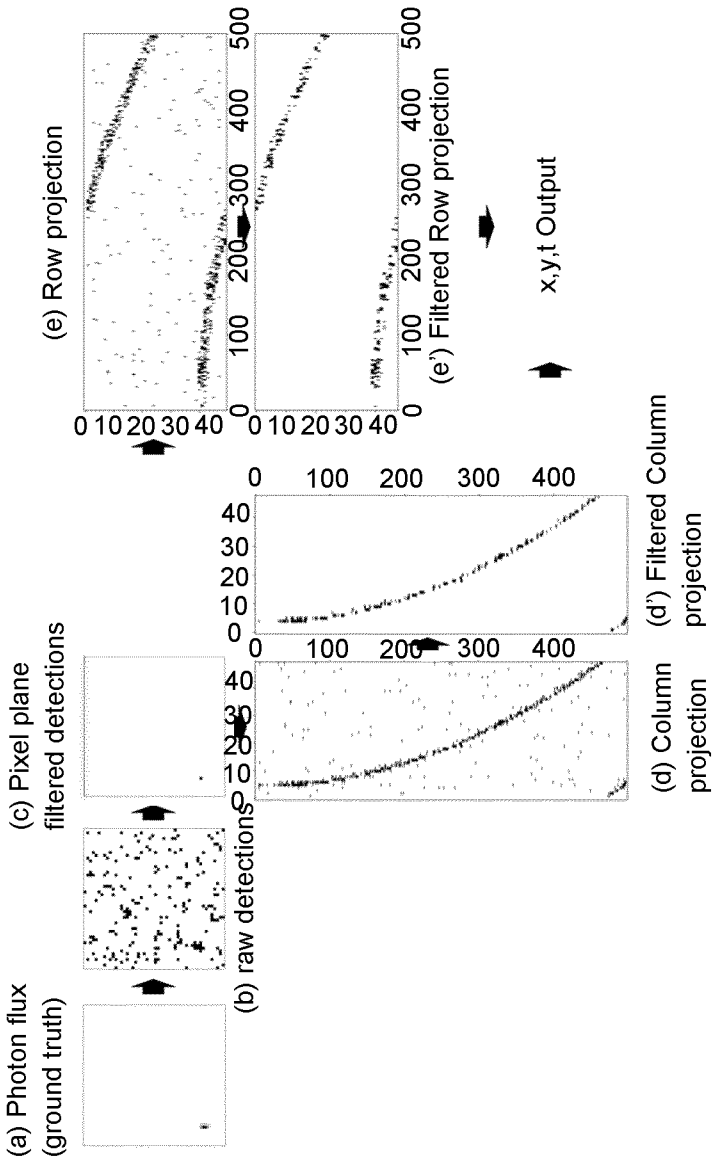
(a) Photon flux (ground truth)
(b) raw detections
(c) Pixel plane filtered detections
(d) Column projection
(d') Filtered Column projection
(e) Row projection
(e') Filtered Row projection
x,y,t Output
0 10 20 30 40
0 100 200 300 400 500
0 100 200 300 400
0 10 20 30 40

**Figure 16**

# INTERNATIONAL SEARCH REPORT

International application No
PCT/EP2022/076182

A. CLASSIFICATION OF SUBJECT MATTER
INV. G01B11/25 G06T5/00 G06T5/20 G06T7/521
ADD.

According to International Patent Classification (IPC) or to both national classification and IPC

B. FIELDS SEARCHED

Minimum documentation searched (classification system followed by classification symbols)
G01B G06T

Documentation searched other than minimum documentation to the extent that such documents are included in the fields searched

Electronic data base consulted during the international search (name of data base and, where practicable, search terms used)
EPO-Internal, WPI Data

C. DOCUMENTS CONSIDERED TO BE RELEVANT

| Category* | Citation of document, with indication, where appropriate, of the relevant passages | Relevant to claim No. |
|---|---|---|
| A | EP 3 575 742 A1 (GLOBAL SCANNING DENMARK AS [DK]) 4 December 2019 (2019-12-04)<br>figures<br>claims<br>paragraphs [0080] - [0091] | 1-12 |
| A | US 6 421 132 B1 (BRAJOVIC VLADIMIR M [US]) 16 July 2002 (2002-07-16)<br>figures<br>claims<br>column 5, line 53 - column 6, line 63 | 1-12 |
| A | WO 02/16865 A2 (3SHAPE APS [DK]; DEICHMANN NIKOLAJ [DK]; CLAUSEN TAIS [DK]) 28 February 2002 (2002-02-28)<br>figures 1-15<br>page 21, line 25 - page 39, line 14 | 1-12 |

-/--

[x] Further documents are listed in the continuation of Box C.

[x] See patent family annex.

* Special categories of cited documents :

"A" document defining the general state of the art which is not considered to be of particular relevance

"E" earlier application or patent but published on or after the international filing date

"L" document which may throw doubts on priority claim(s) or which is cited to establish the publication date of another citation or other special reason (as specified)

"O" document referring to an oral disclosure, use, exhibition or other means

"P" document published prior to the international filing date but later than the priority date claimed

"T" later document published after the international filing date or priority date and not in conflict with the application but cited to understand the principle or theory underlying the invention

"X" document of particular relevance;; the claimed invention cannot be considered novel or cannot be considered to involve an inventive step when the document is taken alone

"Y" document of particular relevance;; the claimed invention cannot be considered to involve an inventive step when the document is combined with one or more other such documents, such combination being obvious to a person skilled in the art

"&" document member of the same patent family

| Date of the actual completion of the international search | Date of mailing of the international search report |
|---|---|
| 15 December 2022 | 23/12/2022 |

| Name and mailing address of the ISA/ | Authorized officer |
|---|---|
| European Patent Office, P.B. 5818 Patentlaan 2<br>NL - 2280 HV Rijswijk<br>Tel. (+31-70) 340-2040,<br>Fax: (+31-70) 340-3016 | Moulara, Guilhem |

2

Form PCT/ISA/210 (second sheet) (April 2005)

# INTERNATIONAL SEARCH REPORT

International application No
PCT/EP2022/076182

C(Continuation). DOCUMENTS CONSIDERED TO BE RELEVANT

| Category* | Citation of document, with indication, where appropriate, of the relevant passages | Relevant to claim No. |
|---|---|---|
| A | EP 0 294 577 A1 (LBP PARTNERSHIP [US])<br>14 December 1988 (1988-12-14)<br>figures<br>claims<br>column 7, line 22 - column 16, line 54 | 1-12 |



Form PCT/ISA/210 (continuation of second sheet) (April 2005)

# INTERNATIONAL SEARCH REPORT

Information on patent family members

International application No
PCT/EP2022/076182

| Patent document cited in search report | Publication date | Patent family member(s) | Publication date |
|---|---|---|---|
| EP 3575742 A1 | 04-12-2019 | CN 110542390 A | 06-12-2019 |
| | | EP 3575742 A1 | 04-12-2019 |
| | | US 2019371053 A1 | 05-12-2019 |
| US 6421132 B1 | 16-07-2002 | NONE | |
| WO 0216865 A2 | 28-02-2002 | AT 431541 T | 15-05-2009 |
| | | AU 8176101 A | 04-03-2002 |
| | | AU 8381201 A | 04-03-2002 |
| | | DK 1314000 T3 | 17-08-2009 |
| | | EP 1314000 A1 | 28-05-2003 |
| | | ES 2327212 T3 | 27-10-2009 |
| | | WO 0216865 A2 | 28-02-2002 |
| | | WO 0216867 A1 | 28-02-2002 |
| EP 0294577 A1 | 14-12-1988 | AT 93052 T | 15-08-1993 |
| | | CA 1323698 C | 26-10-1993 |
| | | EP 0294577 A1 | 14-12-1988 |
| | | JP 2547187 B2 | 23-10-1996 |
| | | JP S63284683 A | 21-11-1988 |
| | | US 4846577 A | 11-07-1989 |