(12) INTERNATIONAL APPLICATION PUBLISHED UNDER THE PATENT COOPERATION TREATY (PCT)

(19) World Intellectual Property Organization
International Bureau

(43) International Publication Date
15 July 2004 (15.07.2004)

PCT

(10) International Publication Number
WO 2004/058024 A3

(51) International Patent Classification[7]: E03D 1/00

(21) International Application Number:
PCT/US2003/040897

(22) International Filing Date:
22 December 2003 (22.12.2003)

(25) Filing Language: English

(26) Publication Language: English

(30) Priority Data:
10/328,619 23 December 2002 (23.12.2002) US

(71) Applicant and
(72) Inventor: **PIERCE, Kristi** [US/US]; 41197 268th Avenue, Vergas, MN 56587 (US).

(74) Agents: **DOLAN, John, F.** et al.; Fredrikson & Byron, P.A., 4000 Pillsbury Center, 200 South Sixth Street, Minneapolis, MN 55402-1425 (US).

(81) Designated States *(national)*: AE, AG, AL, AM, AT, AU, AZ, BA, BB, BG, BR, BW, BY, BZ, CA, CH, CN, CO, CR, CU, CZ, DE, DK, DM, DZ, EC, EE, EG, ES, FI, GB, GD, GE, GH, GM, HR, HU, ID, IL, IN, IS, JP, KE, KG, KP, KR, KZ, LC, LK, LR, LS, LT, LU, LV, MA, MD, MG, MK, MN, MW, MX, MZ, NI, NO, NZ, OM, PG, PH, PL, PT, RO, RU, SC, SD, SE, SG, SK, SL, SY, TJ, TM, TN, TR, TT, TZ, UA, UG, US, UZ, VC, VN, YU, ZA, ZM, ZW.

(84) Designated States *(regional)*: ARIPO patent (BW, GH, GM, KE, LS, MW, MZ, SD, SL, SZ, TZ, UG, ZM, ZW), Eurasian patent (AM, AZ, BY, KG, KZ, MD, RU, TJ, TM), European patent (AT, BE, BG, CH, CY, CZ, DE, DK, EE, ES, FI, FR, GB, GR, HU, IE, IT, LU, MC, NL, PT, RO, SE, SI, SK, TR), OAPI patent (BF, BJ, CF, CG, CI, CM, GA, GN, GQ, GW, ML, MR, NE, SN, TD, TG).

Published:
— *with international search report*

[Continued on next page]

(54) Title: CONCEALED TOILET CLEANING SYSTEM

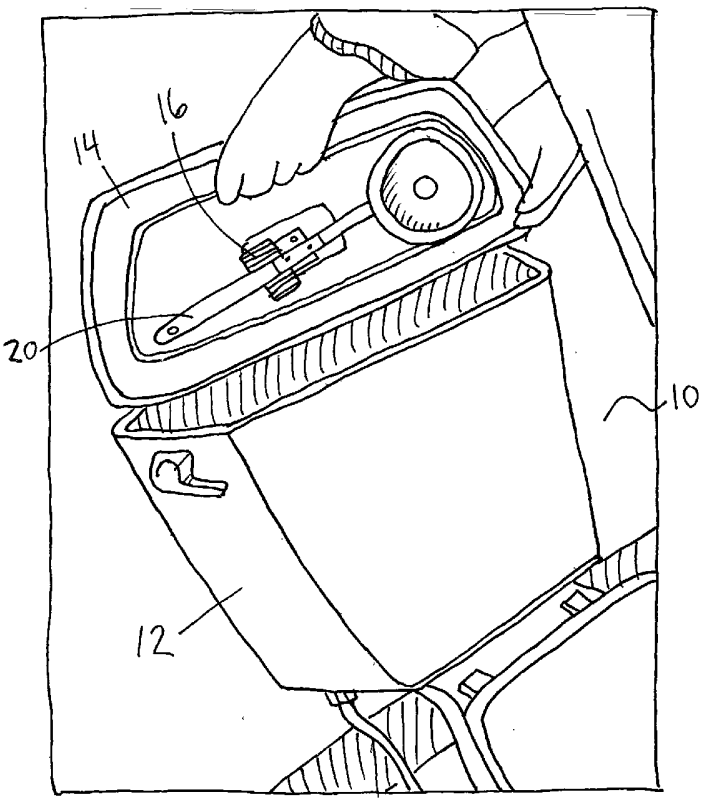

(57) **Abstract:** The present invention relates to a system for concealing a cleaning device such as a toilet plunger within a toilet flush tank. A modified toilet plunger has been designed to include a hinge so that the plunger cup can pivot on the end of the plunger handle, thereby taking up less space. The folded toilet plunger is secured to the inside of the toilet flush tank by a holder, preferably on the toilet flush tank cover, so that the toilet plunger is readily accessible yet out of sight and will drain into the toilet flush tank after use.

WO 2004/058024 A3

(88) Date of publication of the international search report:
28 April 2005

For two-letter codes and other abbreviations, refer to the "Guidance Notes on Codes and Abbreviations" appearing at the beginning of each regular issue of the PCT Gazette.

INTERNATIONAL SEARCH REPORT

International application No.
PCT/US03/40897

A. CLASSIFICATION OF SUBJECT MATTER

IPC(7) : E03D 1/00
US CL : 004/353.000

According to International Patent Classification (IPC) or to both national classification and IPC

B. FIELDS SEARCHED

Minimum documentation searched (classification system followed by classification symbols)
U.S. : 004/353.000

Documentation searched other than minimum documentation to the extent that such documents are included in the fields searched
NONE

Electronic data base consulted during the international search (name of data base and, where practicable, search terms used)
NONE

C. DOCUMENTS CONSIDERED TO BE RELEVANT

Category *	Citation of document, with indication, where appropriate, of the relevant passages	Relevant to claim No.
X --- Y	US 2,701,702 A (DIEDERICH) 08 February 1955 (08.02.1955), See the entire document.	1 and 7 --- 2
Y	US 5,640,722 A (BUI) 24 June 1997 (24.06.1997), See the entire document.	2, 8, 9, 10 and 12
Y	US 6,055,680 A (TOLBERT) 02 May 2000 (02.05.2000), See the entire document.	6
Y	US 4,918,769 A (GANDINI) 24 April 1990 (24.04.1990), See the entire document.	8, 9, 10 and 12

☒ Further documents are listed in the continuation of Box C. ☐ See patent family annex.

* Special categories of cited documents:

"A" document defining the general state of the art which is not considered to be of particular relevance

"E" earlier application or patent published on or after the international filing date

"L" document which may throw doubts on priority claim(s) or which is cited to establish the publication date of another citation or other special reason (as specified)

"O" document referring to an oral disclosure, use, exhibition or other means

"P" document published prior to the international filing date but later than the priority date claimed

"T" later document published after the international filing date or priority date and not in conflict with the application but cited to understand the principle or theory underlying the invention

"X" document of particular relevance; the claimed invention cannot be considered novel or cannot be considered to involve an inventive step when the document is taken alone

"Y" document of particular relevance; the claimed invention cannot be considered to involve an inventive step when the document is combined with one or more other such documents, such combination being obvious to a person skilled in the art

"&" document member of the same patent family

Date of the actual completion of the international search	Date of mailing of the international search report
10 August 2004 (10.08.2004)	27 JAN 2005
Name and mailing address of the ISA/US Mail Stop PCT, Attn: ISA/US Commissioner for Patents P.O. Box 1450 Alexandria, Virginia 22313-1450 Facsimile No. (703) 305-3230	Authorized officer Linda Sholl Telephone No. 703 308 1148

Sheila H. Veney
Paralegal Specialist
Tech. Center 3700

Form PCT/ISA/210 (second sheet) (July 1998)

INTERNATIONAL SEARCH REPORT

PCT/US03/40897

C. (Continuation) DOCUMENTS CONSIDERED TO BE RELEVANT

Category *	Citation of document, with indication, where appropriate, of the relevant passages	Relevant to claim No.
X	US 3,172,415 A (MAUSHUND) 09 March 1965 (09.03.1965), See the entire document.	10 and 11
A	US 2,495,498 A (ALLARD) 24 January 1950 (24.01.1950), See the entire document.	1-13
A	US 2,787,432 A (DIEDERICH) 02 April 1957 (02.04.1957), See the entire document.	1-13
A	US 2,434,399 A (DUCKENFIELD) 13 January 1948 (13.01.1948), See the entire document.	1-13