(No Model.)

J. MOFFET.

ROTARY STEAM PUMP.

No. 276,857. Patented May 1, 1883.

Fig. 5.

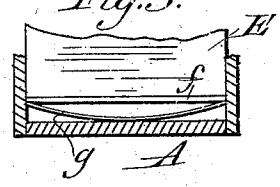

Fig. 1.

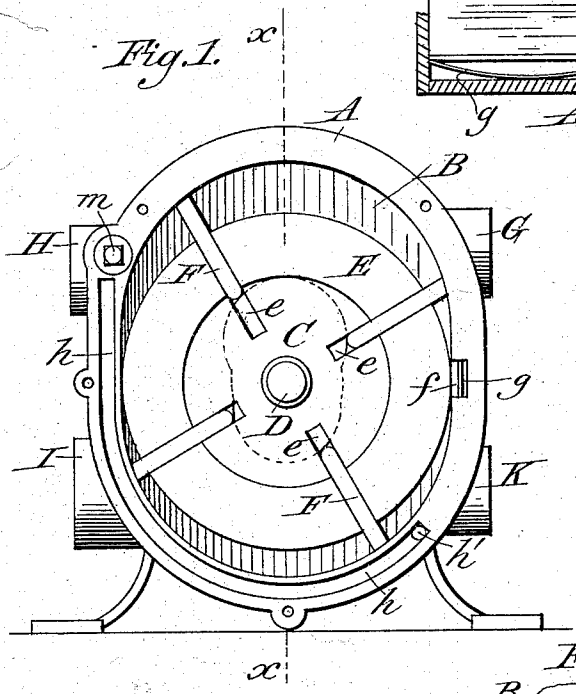

Fig. 2.

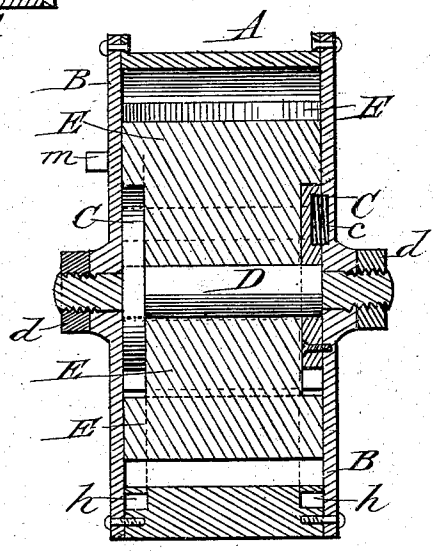

Fig. 6.

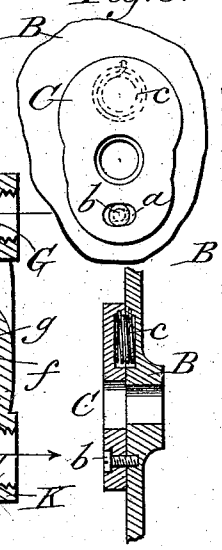

Fig. 3.

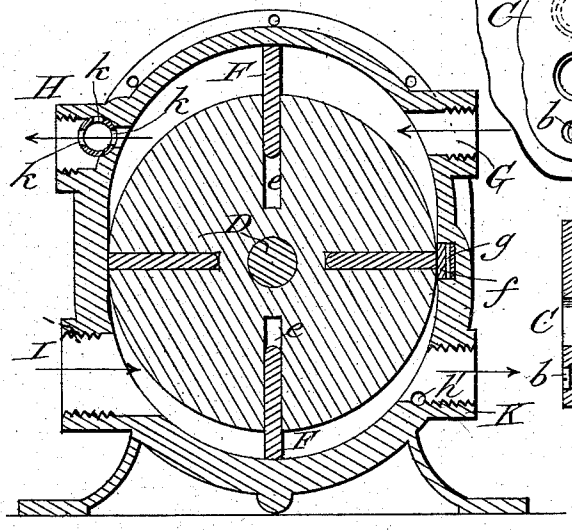

Fig. 4.

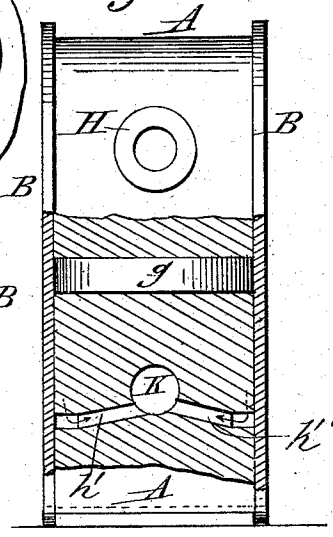

Fig. 7.

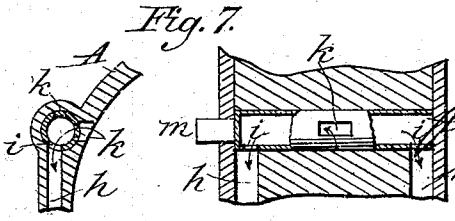

Attest:
F. H. Schott
A. B. Brown.

Inventor:
John Moffet
by J. C. Tasker

N. PETERS, Photo-Lithographer, Washington, D. C.

UNITED STATES PATENT OFFICE.

JOHN MOFFET, OF NEW YORK, N. Y.

ROTARY STEAM-PUMP.

SPECIFICATION forming part of Letters Patent No. 276,857, dated May 1, 1883.

Application filed January 2, 1883. (No model.)

To all whom it may concern:

Be it known that I, JOHN MOFFET, a citizen of the United States, residing at New York, in the county of New York and State of New York, have invented certain new and useful Improvements in Rotary Steam-Pumps; and I do declare the following to be a full, clear, and exact description of the invention, such as will enable others skilled in the art to which it appertains to make and use the same, reference being had to the accompanying drawings, and to the letters and figures of reference marked thereon, which form a part of this specification.

This invention relates to rotary steam-pumps; and it consists in the construction and arrangement of parts, as hereinafter more fully described and claimed.

In the annexed drawings, illustrating the invention, Figure 1 is a side elevation of my improved rotary pump with side plate or cover removed, showing the rotating disk and sliding pistons. Fig. 2 is a transverse sectional elevation taken on the line *x x* of Fig. 1. Fig. 3 is a longitudinal section. Fig. 4 is a sectional end elevation. Fig. 5 is a sectional detail, showing a spring packing-strip. Fig. 6 shows a side view and section of one of the piston-cams. Fig. 7 represents sectional details of the rotary exhaust-valve.

Like letters of reference indicate like parts in the several views.

The letter A represents the pump casing or shell. This shell is nearly oval or vertically elongated, as shown in Figs. 1 and 3, being formed of two semicircles spread apart and connected by tangents. The sides of the shell or casing A are formed by two detachable plates or covers, B B, that are bolted securely to flanges formed on the shell A, as shown in Fig. 2.

On the inner face of each plate B is attached a cam, C. These cams are each provided at or near the lower end with an elongated slot, *a*, through which passes a screw, *b*, for attaching the cam to the plate, the screw being so arranged as to permit the cam to have a slight lateral movement when pressed by the inner edges of the sliding piston. At the upper end of each cam is a circular recess or depression that corresponds with a similar recess formed in the plate B for the reception of a coiled spring, *c*, as shown in Fig. 6, the springs *c c* serving to hold the cams closely against the edges of the pistons, thus packing them effectually.

A shaft, D, passes through the plates B B and cams C C, and is secured at each end by nuts *d d*, as shown in Fig. 2. This shaft supports a rotary disk, E, that is countersunk to receive the cams C C, and is provided with transverse radial slots *e e* for receiving the sliding pistons F F, that abut on their inner edges against the cams, while their outer edges sweep the interior of the shell, their ends passing over the plates B as the disk is rotated.

The shell A is provided with ports at each end, as shown in Figs. 1, 3, and 4, two of these ports being arranged above the center of the rotating disk and two arranged below said center. Steam is admitted to the shell A through the port G, and by expanding against one of the pistons F, said piston or blade being projected beyond the periphery of the disk E, by reason of its inner edge resting against the enlarged parts of the cams C C, will impart a rotary movement to the disk. As the disk rotates, the inner edges of the pistons or blades, being in contact with the cams C C, follow the outlines thereof, and are consequently projected and retracted alternately on opposite sides of the disk. The steam that is admitted to the shell, after passing above the disk E, is exhausted through the port H. Water is admitted to the shell through the port I, and is discharged through the port K by the action of the blades or pistons F, projecting below the rotating disk. It will be observed that the disk E is set out of the center, or is eccentric to the shell A, so that the area of the projecting portions of the pistons or blades F above the disk or in the steam-space is double that of those below the same in the water-space, thereby increasing the power exerted by the rotation of the disk. The shell A is recessed transversely on one side of the rotating disk E for the reception of an oblong packing-strip, *f*, that is held against the periphery of the disk by means of an elliptic spring, *g*, as shown in Figs. 1, 3, 4, and 5.

Instead of allowing the exhaust-steam to escape into the air through the port H, it may

be conducted to the water-discharge port K by means of grooves or channels *h h*, that are formed in the shell, as shown in Figs. 1, 2, 4, and 7. These grooves or channels *h h* are provided at their upper ends with openings that communicate with the shell A through a cylindrical rotary valve, L, Fig. 7. This valve is provided with circular ports *i i*, that may be made to register with the upper ends of the channels or grooves *h h* by simply turning the valve, which also has in its center a series of three elongated ports, *k k k*, that may be made to register in a similar manner with the port H and with the interior of the shell. The direction of the exhaust is thus readily controlled, so as to permit it to pass into the air or divert it into the water-exit, thereby heating the lower portion of the shell and the water in contact therewith. At one end of the valve-cylinder L is a stud, *m*, for the attachment of a wrench, by which it may be turned.

It will be readily seen that by turning the valve L so as to bring two of its elongated ports, *k k*, into the same horizontal line the exhaust-steam will pass directly into the air through the port H, as shown in Fig. 3. When it is desired to divert the exhaust-steam into the water-discharge port K by passing it into the grooves or channels *h h*, the valve L is to be turned so as to bring only one of the ports *k* in communication with the interior of the shell, which causes the ports *i i* to register with the upper ends of the grooves or channels *h h*, as shown in Fig. 7. These grooves or channels *h h* are provided at their lower ends with converging branches *h' h'*, that terminate in the water-discharge port, K, as shown in Figs. 1, 3, and 4. The exhaust-steam is thus made to traverse in contact with the lower portion of the shell A, so as to heat the same as well as the water passing through the shell.

Having thus described my invention, what I claim as new, and desire to secure by Letters Patent, is—

1. In a rotary steam-pump, the combination of the shell A, having suitable ports, the sides or covers B B, the cams C C, having slots *a a*, and connected to said covers by means of screws or pins *b b* passed through said slots, the springs *c c*, supported in recesses between the cams C and side plates, B, and the rotary disk E, having sliding pistons F F, substantially as described.

2. In a rotary steam-pump, the combination, with the shell A, having ports H K and grooves *h h*, connecting with said ports, of the cylindrical valve L, provided with ports *k k k* and *i i*, substantially as described.

3. In a rotary steam-pump, the combination of the shell A, having ports G H I K and grooves *h h*, the rotary disk E, sliding pistons F F, spring-cams C C, spring packing-strip *f*, and rotary cylindrical valve L, having ports *k i*, substantially as described.

In testimony whereof I affix my signature in presence of two witnesses.

JOHN MOFFET.

Witnesses:
PHILANDER ANDERSON,
A. E. REED.