Feb. 25, 1969 A. F. LEHMANN 3,429,493

APPARATUS FOR FEEDING STRIP METAL

Filed July 19, 1967 Sheet 1 of 2

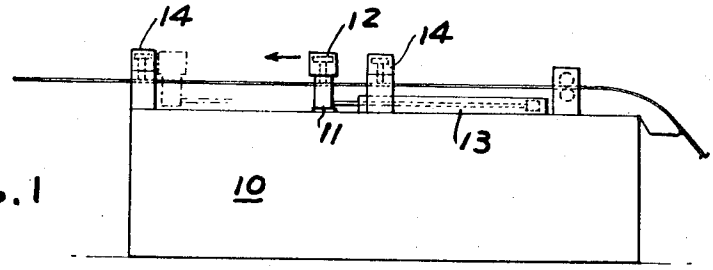

FIG. 1

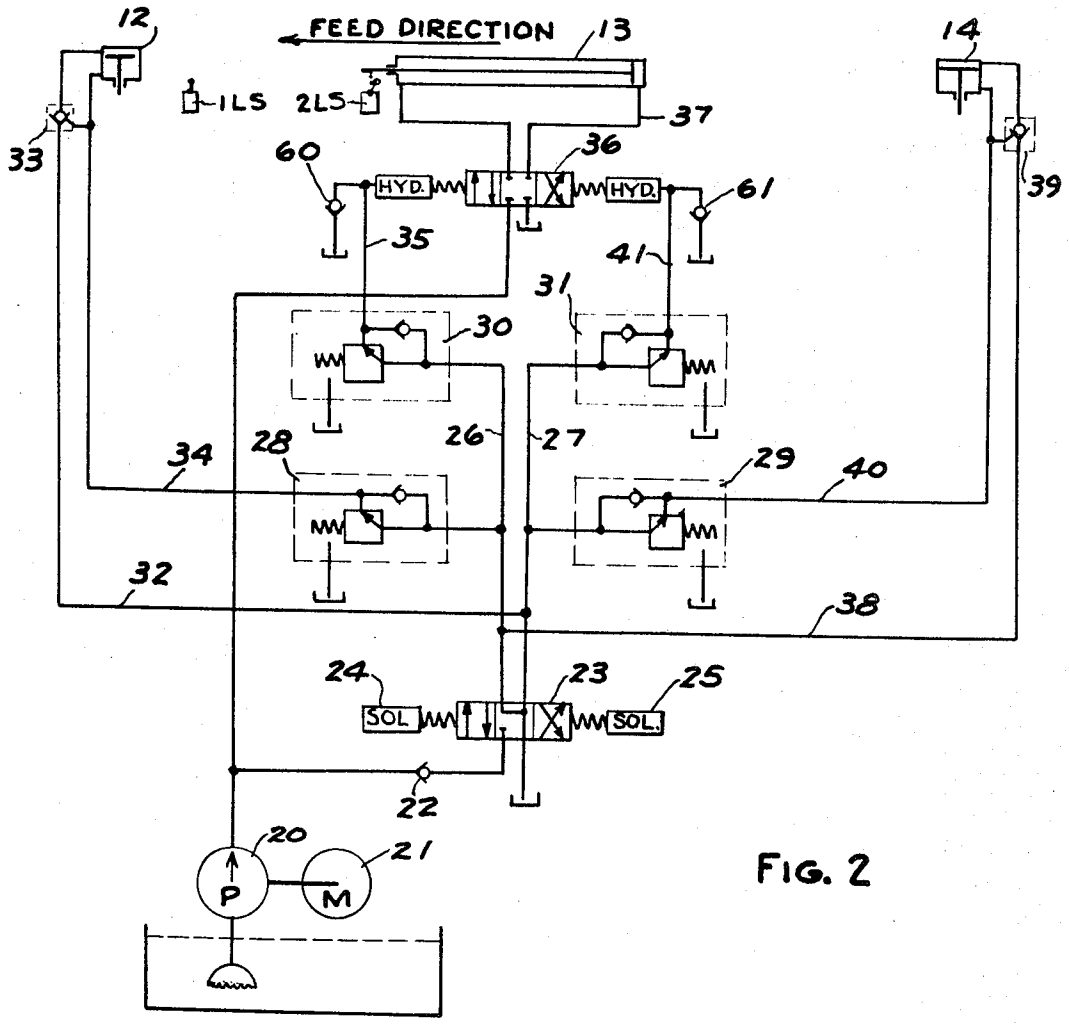

FIG. 2

INVENTOR.
ALBERT F. LEHMANN
BY
Barnes, Kisselle, Raisch & Choate
ATTORNEYS

APPARATUS FOR FEEDING STRIP METAL

Filed July 19, 1967

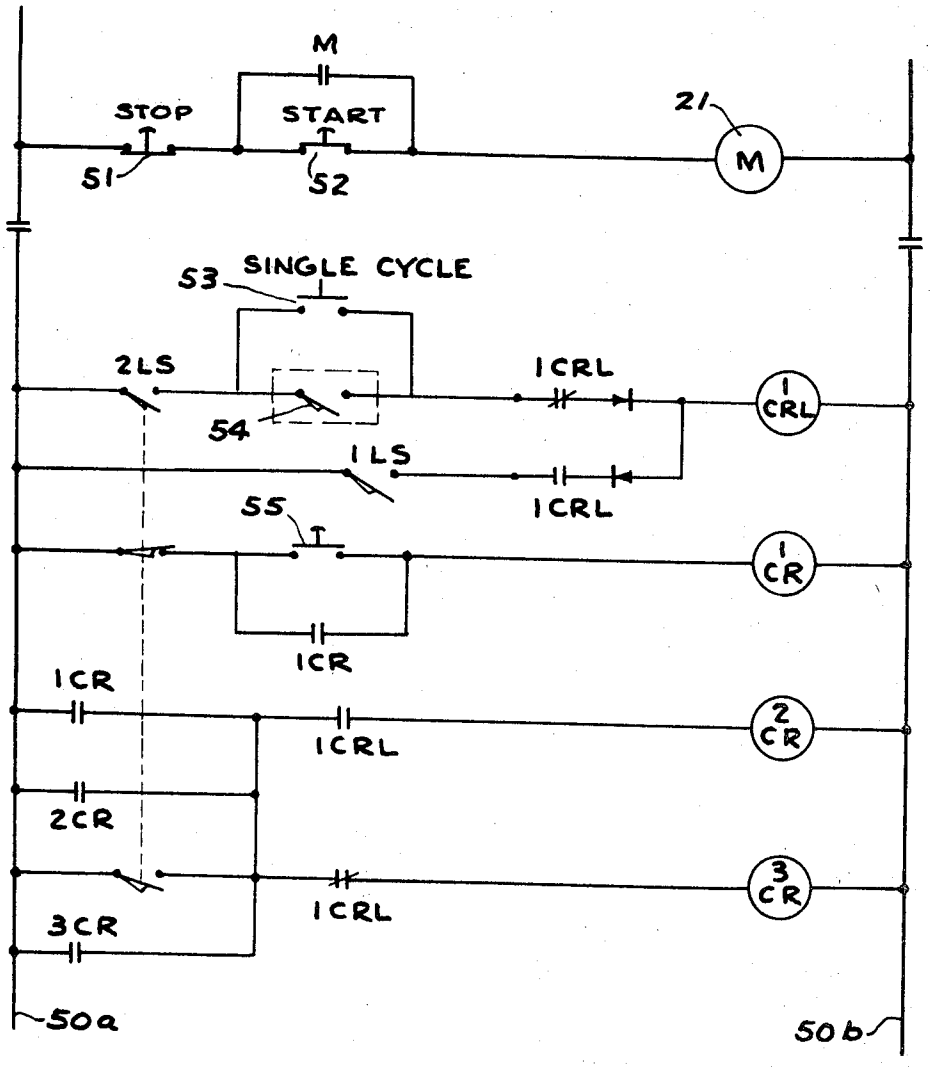

FIG. 3

INVENTOR.
ALBERT F. LEHMANN
BY
Barnes, Kisselle, Raisch & Choate
ATTORNEYS

United States Patent Office

3,429,493

Patented Feb. 25, 1969

1

3,429,493

APPARATUS FOR FEEDING STRIP METAL

Albert F. Lehmann, Dearborn, Mich.
(7800 Dix Ave., Detroit, Mich. 48209)

Filed July 19, 1967, Ser. No. 654,575
U.S. Cl. 226—150 9 Claims
Int. Cl. B65h 17/44, 17/36

ABSTRACT OF THE DISCLOSURE

The apparatus disclosed herein comprises one or more fluid operated gripping cylinders which are movable by a feed cylinder to feed the strip toward the work device such as a press. The apparatus further includes one or more retaining cylinders which grip the strip when the gripping cylinders are retracted to hold the strip in position until the gripping cylinders can be reciprocated to their original position for the beginning of another cycle. The control of the various cylinders is achieved by a hydraulic and an electrical circuit wherein the operation of the feed cylinder is not initiated until the gripping cylinders or retaining cylinders have been actuated to grip the strip. Further, the circuit includes an arrangement whereby in an emergency, the various cylinder movements can be interrupted and locked in position so that the cycle can be re-initiated from the point of stoppage without loss of registry.

This invention relates to apparatus for feeding strip metal preferably from a coil to a press or similar work device.

Background of the invention

In the handling of strip material from a coil and the feeding of the strip to a work device such as a press, it is common to utilize one or more gripping cylinders which are moved by a feed cylinder to feed the strip toward the press. Retainer cylinders are commonly provided to hold the strip after it is released by the gripping cylinders and during the return movement of the gripping cylinders for successive feeding.

Among the objects of the present invention are to provide a novel hydraulic and electrical circuit control for such an apparatus wherein feeding will not be initiated until the gripping or retaining cylinders, as the case may be, are caused to engage the strip; wherein upon emergency stop the various cylinders will be locked in their respective positions so that upon re-initiation of the operation, the cycle of operation will be completed without loss of registry of the strip of material with respect to the device to which it is being fed.

Summary

The apparatus disclosed herein comprises one or more fluid operated gripping cylinders which are movable by a feed cylinder to feed the strip toward the work device such as a press. The apparatus further includes one or more retaining cylinders which grip the strip when the gripping cylinders are retracted to hold the strip in position until the gripping cylinders can be reciprocated to their original position for the begining of another cycle. The control of the various cylinders is achieved by a hydraulic and an electrical circuit wherein the operation of the feed cylinder is not initiated until the gripping cylinders or retaining cylinders have been actuated to grip the strip. Further, the circuit includes an arrangement whereby in an emergency, the various cylinder movements can be interrupted and locked in position so that the cycle can be re-initiated from the point of stoppage without loss of registry.

2

Description of the drawings

FIG. 1 is a diagrammatic view of an apparatus embodying the invention.

FIG. 2 is a schematic diagram of the hydraulic circuit utilized in the invention.

FIG. 3 is a schematic diagram of the electrical circuit utilized in the invention.

Description

Referring to FIG. 1, a typical device embodying the invention comprises a base **10** which has a carriage **11** thereon that supports one or more gripping cylinders **12** that are moved by a feed cylinder **13** to feed the strip toward a work device such as a press (not shown). The apparatus further includes front and rear retainer cylinders **14**, **15** that are operated to grip the strip when the gripping cylinders release the strip and to hold the strip until the gripping cylinders **12** are returned to their original position for another feed stroke.

Referring to the hydraulic circuit shown in FIG. 2, a pump **20** driven by a motor **21** supplies fluid through a check valve **22** to a four-way valve **23** that is operated by solenoids **24**, **25**. The four-way valve **23** selectively supplies fluid to lines **26**, **27** which are connected in parallel thereto sequence valves **28**, **29**, **30**, **31**. Each of the valves are substantially identical, the valves **28**, **29** being set to permit flow therethrough when the pressure reaches one predetermined value, such as 100 pounds per square inch, while the valves **30**, **31** being set to permit flow therethrough at a higher predetermined pressure, such as 200 pounds per square inch. Valve **23** is also connected by a line **32** through a pilot operated check valve **33** with one or more gripping cylinders **12**. Sequence valve **28** is connected by a line **34** to the other side of the gripping cylinders **12**. Thus, when the valve **23** is actuated in one direction to permit fluid to flow to the valve **29**, gripper **12** will close immediately and as soon as the pressure exceeds the setting of the valve, namely, 100 pounds per square inch, fluid is supplied to the retaining cylinder **14** to cause the retaining cylinder to release the strip. Sequence valve **31** is connected by a line **41** to one side of a fluid operated four-way valve **36**. Thus, when the pressure supplied to the sequence valve **31** exceeds the setting of the sequence valve, namely, 200 pounds per square inch, the four-way valve **36** is actuated to supply fluid to one end of the feed cylinder **13** through line **37** to cause the piston of the feed cylinder **13** to move in one direction for feeding the strip.

Similarly, a line **38** connects the valve **23** through a pilot operated valve **39** to one end of one or more retainer cylinders **14**. The sequence valve **29** is connected by a line **40** to the other end of the retainer cylinders **14** so that they are actuated to release the strip when the pressure exceeds the setting of the sequence valve **29**. Sequence valve **30** is connected by a line **35** to the other end of the four-way valve **36** so that when the pressure exceeds the setting of the sequence valve **30**, the valve **36** is actuated to cause the feed cylinder **13** to move in the opposite direction.

Referring to FIG. 3, the circuit for controlling the hydraulic circuit comprises power lines **50*a***, **50*b*** that include stop button **51** connected in series with a start button **52** and the motor **21**. At the limits of its movement, the feed cylinder or the carriage operated by the feed cylinder actuates limit switches **1LS**, **2LS** (FIG. 2). As shown in FIG. 3, when the feed reverse limit switch **2LS** is tripped and when the memory relay **1CRL** is closed, it initiates a cycle of operations as presently described.

Assuming that the feed cylinder **13** has its piston so that the carriage is in its rearmost position, switch **2LS**

will be tripped causing memory relay 1CRL to be ready to receive a signal. This closes contacts 3CR energizing solenoid **24**. In this position, the gripping cylinders **12** are open, the feed cylinder **13** is retracted and the retainer cylinders **14**, **15** are closed or in gripping position.

When a signal to feed forward is received either from single cycle push button **53** or signal switch **54** on the press, memory relay 1CRL is energized. This closes contacts 2CR and energizes solenoid **25** and de-energizes solenoid **24**. The valve **23** is thus shifted permitting fluid to flow in line **27** and line **32**, the latter flow causing gripping cylinder **12** to engage the metal. When the pressure reaches the pressure setting of sequence valve **29**, fluid is supplied to open or retract the retainer cylinder **14**. When the pressure reaches the setting of sequence valve **31**, the sequence valve **31** opens to shift the four-way valve **36** in a direction to cause the feed cylinder **13** to feed the carriage and, in turn, the gripping cylinders **12** forwardly. When the feed cylinder reaches the end of its stroke, switch 1LS is engaged unlatching the memory relay 1CRL to close the contact 3CR and, in turn, de-energize solenoid **25** and energize solenoid **24**. At this point, when fluid is interrupted to the valve **29**, fluid flow through line **38** causes retainer cylinder **14** to immediately close to grip the metal strip. As the pressure builds up to exceed the setting of sequence valve **28**, the gripping cylinders **12** are opened. As pressure further builds up to the setting of sequence valve **30**, the four-way valve **36** is shifted to cause fluid to flow in a direction to retract the feed cylinder **13**. As the feed cylinder reaches the end of its return stroke, it engages switch 2LS so that another cycle can be initiated.

In the event the emergency stop button **51** is actuated, whichever of the solenoids **24**, **25** is energized will immediately become de-energized causing the four-way valve **23** to become centered. The sequence valves **28**, **29**, **30**, **31** are immediately drained and checkvalves **60**, **61** open allowing the four-way pilot valve **36** to center thereby stopping the movement of the feed cylinder **13**. Pilot operated check valves **33**, **39** are utilized to hold the gripping cylinders **12** and retaining cylinders **14** in their positions at the time of the emergency stop.

Memory relay 1CRL is of the type which latches in any position in which it is set so that upon restoring of power and tripping the feed complete button **55**, the cycle will be completed from its point of stoppage without loss of registry.

I claim:

1. An apparatus for feeding strip metal comprising
first fluid operated means for gripping the strip,
fluid operated means for translating said last mentioned means to feed the strip,
and second fluid operated means for gripping the strip after it has been moved by said last mentioned means,
first valve means operable at one pressure to disengage said first mentioned gripping means,
second valve means connected in parallel to said first valve means and operable at a higher pressure to operate said translating means in one direction,
third valve means operable at one pressure to disengage said second gripping means,
fourth valve means connected in parallel to said third valve means and operable at a higher pressure to operate said translating means in the opposite direction,
first means responsive to the position of said first gripping means at one end of said movement of said gripping means for actuating said first gripping means and supplying fluid to said first and second valve means,
second means responsive to the position of said first gripping means at the other end of said movement for actuating said second gripping means and supplying fluid to said third and fourth valve means.

2. The combination set forth in claim **1** wherein said means at each end of the movement of said translating means comprises a switch,
a solenoid operable by each said switch and a valve selectively operated by said solenoid to direct fluid either to said first gripping means and said first and second valve means or said second gripping means and said third and fourth valve means.

3. The combination set forth in claim **1** including each said fluid operating gripping means having a one-way valve in the circuit thereof to hold the gripping means in any position which fluid flow to said valve means is interrupted.

4. The combination set forth in claim **1** including a control relay operable on said second and fourth valve means for controlling the flow of fluid thereto.

5. An apparatus for feeding strip metal comprises
at least one fluid operated cylinder for gripping the strip,
at least one fluid operated cylinder for translating said gripping cylinder,
at least one fluid operated retaining cylinder for engaging said strip,
a first pressure responsive valve operable at one pressure to supply fluid to said gripping cylinder to disengage said strip,
a second pressure responsive valve connected in parallel to said first pressure responsive valve and operable at a higher pressure to supply fluid to said translating cylinder to move said gripping cylinder in one direction,
a third pressure responsive valve operable at one pressure to supply fluid to disengage said retaining cylinder from said strip,
a fourth pressure responsive valve connected in parallel to said third pressure responsive valve and operable at a higher pressure to supply fluid to said translating cylinder to move said gripping cylinder in the opposite direction,
a control valve for selectively supplying fluid either to said gripping cylinder and said first and second pressure responsive valves or to said retaining cylinder and said third and fourth pressure responsive valves,
and means responsive to the position of said gripping cylinder for selectively moving said control valve.

6. The combination set forth in claim **5** wherein said last mentioned means comprises switches and solenoids actuated by said switches to move said control valve.

7. The combination set forth in claim **5** including a one-way valve associated with each said gripping cylinder and retaining cylinder for holding the pistons of said cylinders in any position when fluid flow thereto is interrupted.

8. The combination set forth in claim **5** wherein said last mentioned means comprises switches,
solenoids associated with said control valve,
and a relay controlled by said switches for selectively energizing said solenoids.

9. The combination set forth in claim **8** including a one-way valve associated with each said gripping and retaining cylinder for holding the piston thereof in any position in the event the flow of fluid thereto is interrupted as when the solenoids are simultaneously de-energized.

References Cited

UNITED STATES PATENTS

2,803,335	8/1957	Powers	226—166
3,157,334	11/1964	Bunnell et al.	226—150
3,329,327	7/1967	Scribner	226—162

ALLEN N. KNOWLES, *Primary Examiner.*

U.S. Cl. X.R.

226—162