W. STENDER.

BOTTLE HANDLING APPARATUS.

APPLICATION FILED APR. 13, 1914.

1,117,272.

Patented Nov. 17, 1914.

2 SHEETS—SHEET 1.

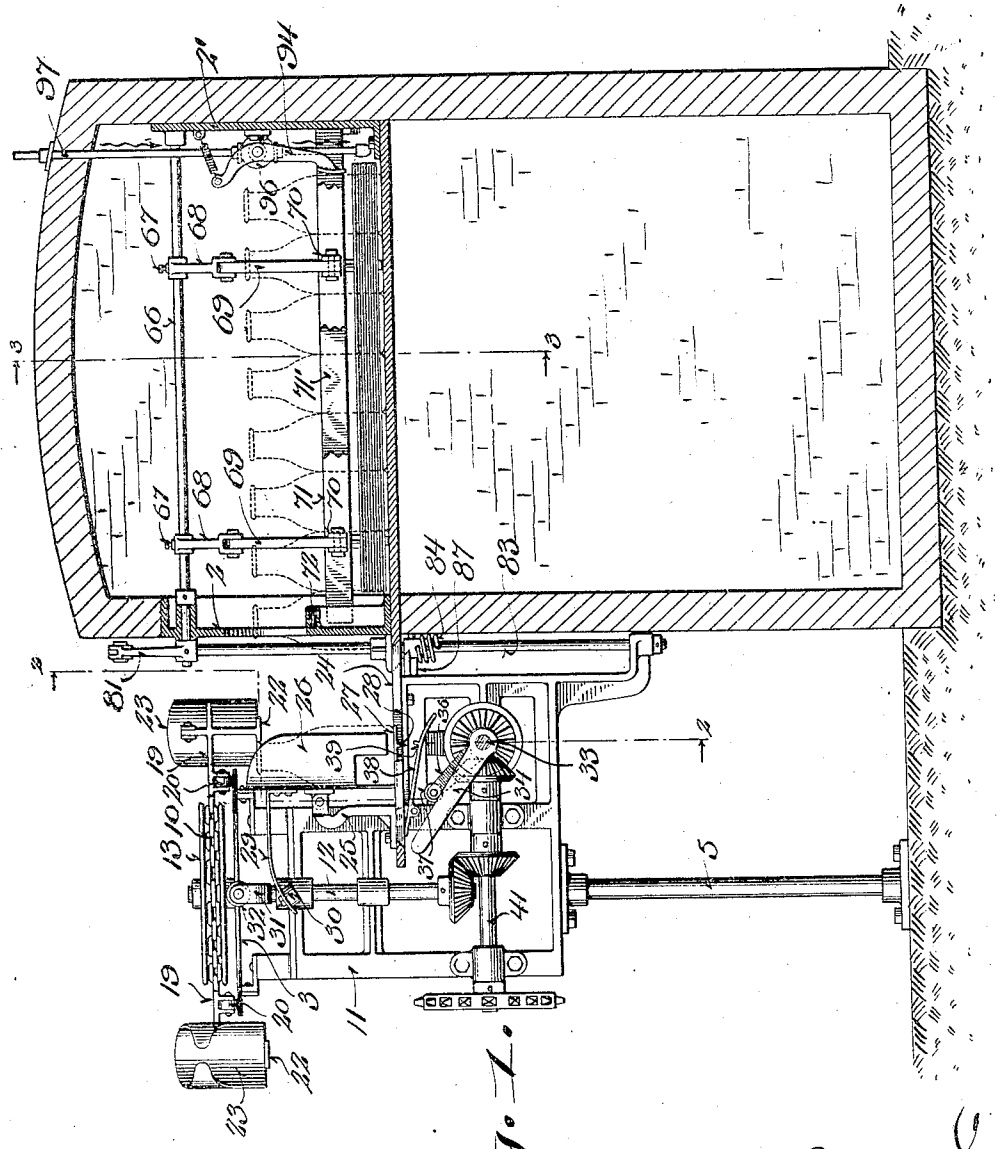

Fig. 1.

Witnesses:
Casanave Young
May Downey.

Inventor:
William Stender
By Oliphant & Young
Attorneys.

W. STENDER.

BOTTLE HANDLING APPARATUS.

APPLICATION FILED APR. 13, 1914.

1,117,272.

Patented Nov. 17, 1914

2 SHEETS—SHEET 2.

Fig. 3.

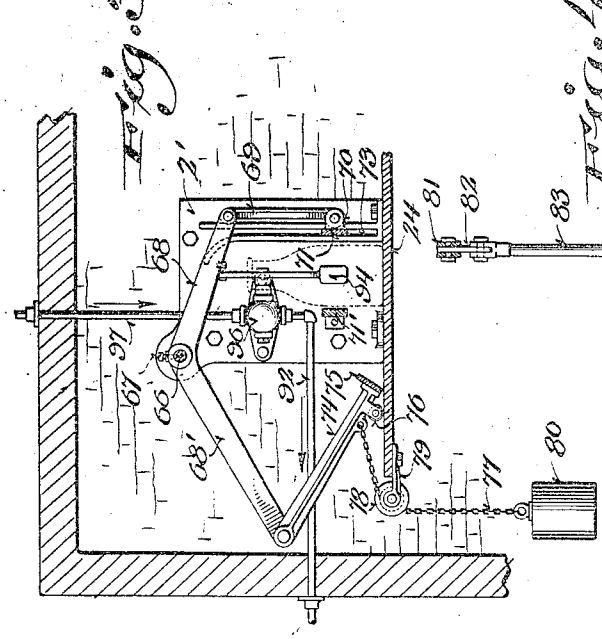

Fig. 4.

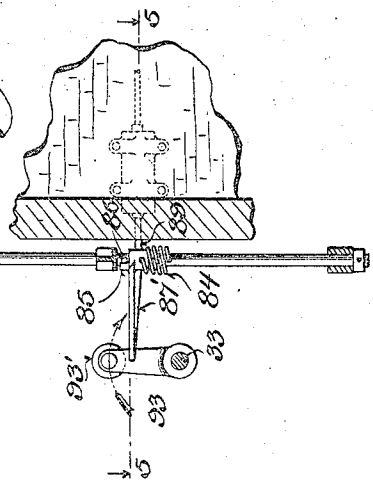

Fig. 5.

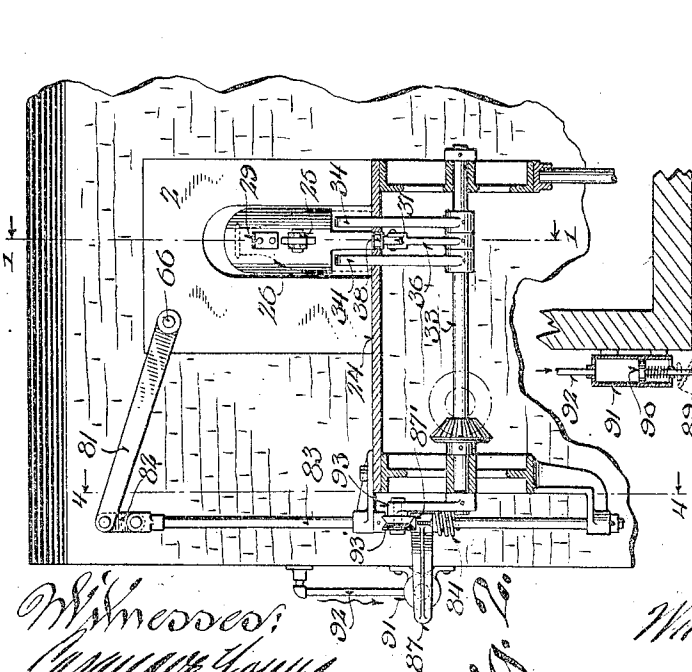

Witnesses:
Clarence Young,
May Downey

Inventor:
William Stender
by Clarence Young
Attorneys.

UNITED STATES PATENT OFFICE.

WILLIAM STENDER, OF MILWAUKEE, WISCONSIN.

BOTTLE-HANDLING APPARATUS.

1,117,272. Specification of Letters Patent. Patented Nov. 17, 1914.

Application filed April 13, 1914. Serial No. 831,444.

To all whom it may concern:

Be it known that I, WILLIAM STENDER, a citizen of the United States, and resident of Milwaukee, in the county of Milwaukee and State of Wisconsin, have invented certain new and useful Improvements in Bottle-Handling Apparatus; and I do hereby declare that the following is a full, clear, and exact description thereof.

My invention has for its object to improve the bottle-handling apparatus to which my Letters Patent No. 1,043,548, of November 5, 1912, relates, and it consists in what is herein particularly set forth with reference to the accompanying drawings and pointed out in the claims of this specification, the novelty in the improved apparatus being an automatic mechanism by which the bottles in rows are intermittently fed forward in an annealing oven, and in details of the mechanism.

Figure 1 of the drawings represents a cross-section view of my improved bottle handling apparatus in connection with an annealing oven also in cross-section, the view being indicated by line 1—1 in Figs. 2 and 3; Fig. 2, an elevation partly in section on the plane indicated by line 2—2 in Fig. 1; Fig. 3, a sectional view indicated by line 3—3 in Fig. 1; Fig. 4, a similar view of a detail of the apparatus indicated by line 4—4 in Fig. 2, and Fig. 5, a horizontal sectional view indicated by line 5—5 in Fig. 4.

Referring by numerals to the drawings, 5 indicates a standard, and 11 a frame rigid on the standard, 12 a vertical shaft for which the frame is provided with bearings, 13 a grooved pulley fast on the shaft, 10 a conveyer-chain that runs on the pulley, 19 brackets in connection with the chain at regular intervals thereof and extending laterally therefrom, 20 a supporting roller hung in connection with each bracket to travel on a track 3. A lower end projection 22 of each bracket constitutes a support, and in hinged connection with each bracket is a holder 23, said bracket and holder constituting a bottle-carrier. Supported in connection with the standard 11 is a bottle receiving table 24 in register with the floor of an annealing oven through an opening in a wall-plate 2 of the same. Fast on the table is a standard 25 and pivotally connected to the standard is a bottle receiving tray 26 having a bottle-supporting seat 27 provided with an underside lug 28. Fast to the back of the tray 26 is an arm 29, and attached to the arm is a counterweight 30 by which said tray is tilted into normal position when clear of a bottle.

Bottles are discharged from the carriers onto the tray 26 by means of a tripping device in the form of a U-shaped bracket 31 mounted on the frame 11 and having rollers 32 hung therein. The bracket 19 of each bottle-carrier passes between the rollers 32, and the holder 23 of said carrier is tilted by said rollers. The bottle in a tilted carrier slides into the tray 26 then in normal position, the result being an overbalancing of the counterweight 30 and a swing of said tray to a vertical position to thereby stand said bottle on the table 24 opposite the entrance to the annealing oven, this position of the bottle being shown by dotted lines in Figs. 1 and 2.

The shaft 10 is in gear with a horizontal shaft 41 for which the frame 11 is provided with bearings, and a driving sprocket-wheel is shown fast on the shaft 41. Another horizontal shaft 33 has its bearings on the frame 11 and is geared to the shaft 41. Fast on the shaft 33 is a pair of arms 34 that are rotated through slots in the table 24 and act to discharge a bottle from the then vertical tray 26 and move said bottle into the annealing oven. Another arm 36 is fast on the shaft 33 between the arms 34 to extend in advance of the same, and an anti-friction roller 37 is carried by the arm 36 in opposition to a spring latch-plate 38 suspended in connection with the table 24 and having formed therewith an upwardly projecting stud 39 that comes into engagement with the lug 28 of the bottle seat 27 of the tray 26, whereby said tray is held in vertical position for a predetermined time after a bottle is discharged therefrom, in order to delay action of the counterweight 30 until said bottle has tray-clearance on the table 24.

Excepting the wall plate 2 of the annealing oven, the general construction, arrangement and operation of parts above specified is similar to what is disclosed in my Letters Patent aforesaid and they are similarly indicated.

The wall plate 2 of the annealing oven and another plate 2′ in said oven are provided with bearings for a rock-shaft 66 that extends through said wall plate. Fastened by set screws 67 or other suitable means on

the rock-shaft are elbow levers, the arms of each lever being of different lengths. Hung in connection with the shorter arms 68 of said levers are links 69 coupled to brackets 70 on a rail 71 for which the plates 2, 2′, are provided with guides 72 and 73 respectively. Pivotally connected to the longer arms 68′ of the levers are bars 74 connected to a rail 75, and hung in connection with the bars are rollers 76 that oppose the floor of the annealing oven. Attached to each of the bars 74 is a chain or other suitable flexible runner 77 supported by a bracket 79 fastened to the underside of the oven floor, and suspended in connection with each chain is a counterweight 80. Fastened to the plates 2, 2′, is a rail 71′, and the bottles are fed to the annealing oven between the stationaary rail and the movable rail 71.

Fast on the rock-shaft 66, outside of the annealing oven, is a crank 81, and a link 82 is coupled to the crank and pull rod 83 for which the frame 11 is provided with guides. Loose on the pull rod is the hub of a bell-crank attached to a spiral supporting spring 84 secured in connection with said rod. The bell-crank hub is provided with a lug 85 and a pin 86 extends through the pull rod 83 to serve as a stop in the path of the lug. One arm 87 of the bell-crank is normally in the path of a button 88 fast on the outer end of the rod 89 of a spring-controlled piston 90 in a cylinder 91 attached to a wall of the annealing oven, and a valve controlled pipe 92 conveys compressed air or other fluid under pressure to the cylinder back of the piston. By an exertion of pressure on the arm 87 of the bell-crank, said crank is turned, against spring-resistance to bring its other arm 87′ in the path of a grooved roller 93′ carried in connection with a crank 93 fast on the shaft 33, whereby motion is imparted to the rock-shaft 66 and the elbow-levers therewith against resistance of the counterweights 80, said arm 87′ of the bell-crank being fashioned to match the groove of said roller.

The innermost bottle of a row between the guide-rails 71 and 71′ actuates a valve lever 94 against resistance of a spring 95 connecting said lever and the plate 2′, the valve being in a casing 96 to which the pipe 92 and a fluid under pressure supply pipe 97 are coupled. The operation of the valve-lever results in the above described operation of the bell-crank lever, and rock-shaft 33, as aforesaid, whereby the rail 71 is elevated by the elbow-levers to clear an adjacent row of bottles and at the same time, the rail 75 is actuated to move said row of bottles forward in the oven ahead of the reciprocative path of said rail 71, the operation of moving the bottles in rows being recurrent. A row of bottles having been moved forward in the oven, the valve-lever is automatically returned to normal position, to cut off fluid under pressure from the cylinder 91, whereupon the piston 90 and the spring-controlled bell-crank automatically return to normal position, and the counterweights 80 operate to return the rail 75, the bars 74, elbow-levers, rock-shaft 33, crank 81 and spindle 83 to their normal positions.

I claim:

1. The combination of an annealing oven, a table in register with the floor of the oven through an opening in a wall of said oven, means for delivery of bottles to the table upright thereon and for pushing the bottles therefrom into the oven, a stationary guide rail and a vertically movable guide rail between which the bottles are alined in a row in the oven, a pusher rail movable on the oven floor back of the bottles, means for reciprocating the movable guide rail and pusher rail, and means in the path of the innermost bottle of said row for starting reciprocation of the movable rails, one of these rails being elevated clear of said bottles when the same are being acted upon by the other.

2. The combination of an annealing oven, a table in register with the floor of the oven through an opening in a wall of said oven, means for delivery of bottles to the table upright thereon and for pushing the bottles therefrom into the oven, a stationary guide rail and a vertically movable guide rail between which the bottles are alined in a row in the oven, a rock-shaft extending from within said oven through a wall of the same, elbow levers fast on the rock-shaft and having arms thereof in link connection with the movable guide rail for which guides are provided, counterweighted bars in pivotal connection with the other arms of said levers, a pusher rail connected to said arms to reciprocate upon the oven floor back of the bottles, means for actuating said shaft against counterweight resistance, and means in the path of a row of bottles between the guide rails for starting the shaft actuating means, the movable guide rail being elevated clear of the bottles operated upon by the pusher rail.

3. The combination of an annealing oven, a table in register with the floor of the oven through an opening in a wall of said oven, means for delivery of bottles to the table upright thereon and for pushing the bottles therefrom into the oven, bottle alining, clearing and pushing mechanism in the oven comprising a rock-shaft extending through an oven wall, a crank fast on the shaft outside the oven, a pull rod coupled to the crank, a spring-controlled bell-crank in rotary adjustable connection with the pull rod, a cylinder provided with a piston having a rod exertive in one direction against an arm

of the bell-crank, a rotary crank operative on the other arm of said bell-crank when swung into its path by said piston, and a spring-controlled valve lever in the path of a row of bottles alined in said oven, said valve lever serving to govern admission of fluid under pressure to said cylinder back of the piston therein.

In testimony that I claim the foregoing I have hereunto set my hand at Milwaukee in the county of Milwaukee and State of Wisconsin in the presence of two witnesses.

WILLIAM STENDER.

Witnesses:

HENRY G. DISCH,

FRED BARTH.