March 15, 1955 S. BLAKE 2,703,933

FABRIC STRIP MEASURING MECHANISM

Filed Dec. 30, 1953

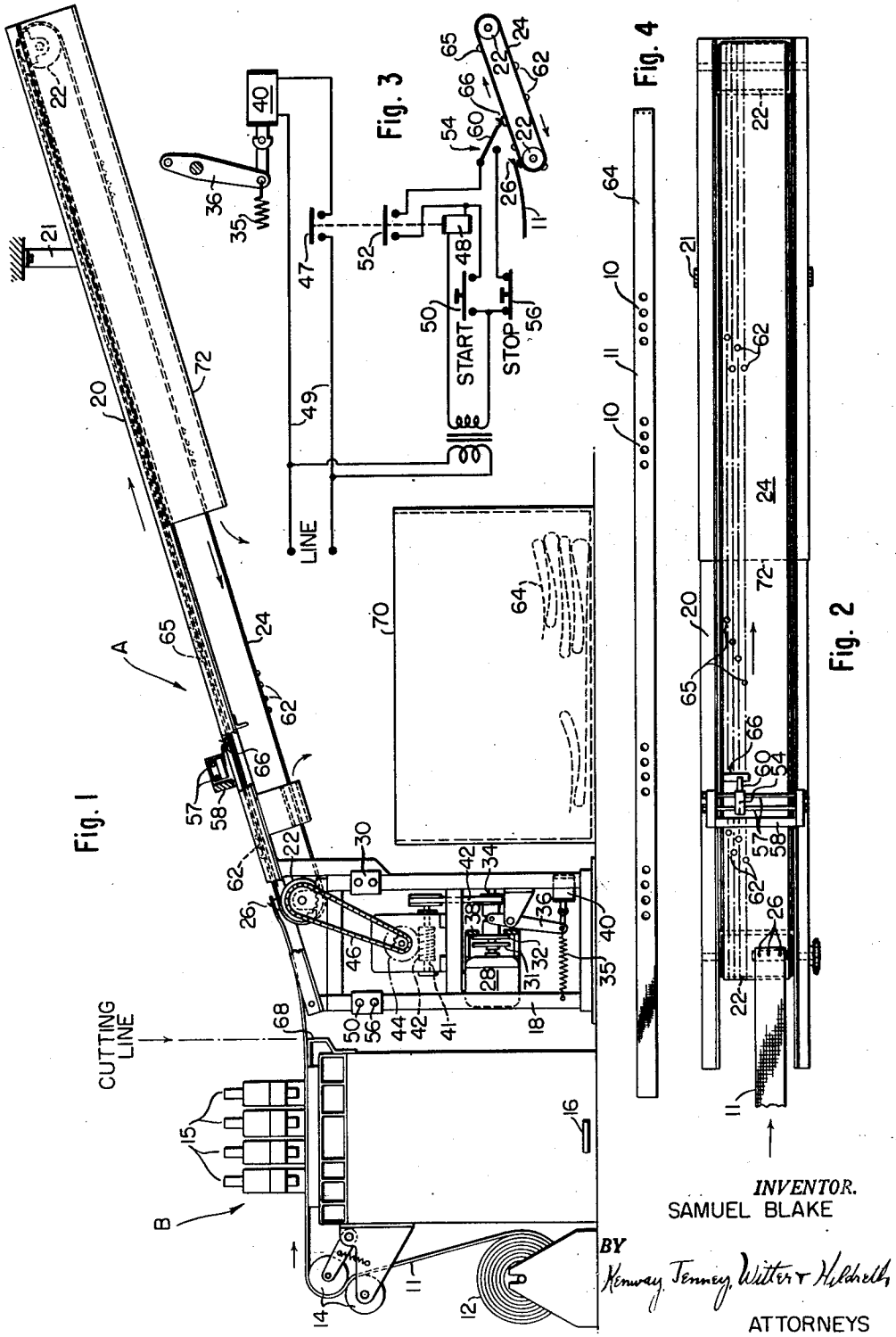

INVENTOR.
SAMUEL BLAKE

BY Kenway, Jenney, Witter & Hildreth

ATTORNEYS

United States Patent Office 2,703,933 Patented Mar. 15, 1955

2,703,933

FABRIC STRIP MEASURING MECHANISM

Samuel Blake, Waban, Mass., assignor to Enterprise-Moakler Co. Inc., East Cambridge, Mass., a corporation of Massachusetts

Application December 30, 1953, Serial No. 401,179

2 Claims. (Cl. 33—132)

This invention relates to novel mechanism for measuring predetermined lengths of fabric strip material, and more particularly to mechanism adapted to cooperate with fabric strip treating machines to draw predetermined lengths of fabric strip therethrough and stop the strip at predetermined locations to be treated.

The invention is especially applicable to use in conjunction with machines for making side wall strips for mattresses. These strips require punching in predetermined locations for the placing of grommets, ventilators and handles, and the employment of my invention with such machines facilitates these operations with great saving of time and increased production and also assures an accurate and superior product.

The invention embodies an endless band having one end adapted to be disposed adjacent to a fabric strip treating machine and provided with means for attaching the free end of the strip to the band. Power means is provided for operating the band to draw the fabric strip through the machine, and automatically controlled means is provided for stopping the band and strip in predetermined locations wherein the strip is to be treated. The production of a mechanism of this nature and for the purpose described comprises the primary object of the invention.

These and other features of my invention will be best appreciated and understood from the following detailed description of a preferred embodiment thereof, selected for purposes of illustration and shown in the accompanying drawings, in which:

Fig. 1 is a front elevation of a mechanism embodying my invention disposed in operating position adjacent to a fabric strip treating machine,

Fig. 2 is a plan view of the mechanism,

Fig. 3 is a wiring diagram of the control mechanism, and

Fig. 4 is a plan view on a reduced scale of a fabric strip treated by the machine.

In the drawings, my novel measuring mechanism A is shown in association with a machine B. The machine B is employed to punch four holes **10** in predetermined locations in a strip of fabric **11**. A roll **12** of the fabric is supported adjacent to the machine B, and the strip is led therefrom between a pair of pressure rolls **14** and thence beneath a plurality of punches **15** under the control of a treadle **16**. A predetermined length of the strip is employed as the side wall of a mattress, and four series of holes **10** are required to be formed in predetermined locations in the strip for receiving handles, grommets and ventilators. The measuring mechanism A is adapted to move the strip along the required length to form these holes and perform such other functions as may be required, as will now be described.

The mechanism A is supported on an upright frame **18** adapted to be placed adjacent to the machine B. Supported on the frame **18** and extending outwardly therefrom, preferably at an upwardly inclined angle, is a relatively long frame **20** also supported at its free end by a bracket **21**. Supported on rolls **22** adjacent to the ends of the frame **20** is an endless band **24** having a top reach extending along the frame **20**. One portion of the band carries a series of teeth **26** adapted to receive and anchor the free end of the strip **11** to the band. When the band is driven in the direction of the arrow, the strip is drawn from the roll **12** and passed beneath the punches **15**.

The band is driven by a motor **28** and the following described mechanism, the motor being under the control of a hand switch **30**. A friction disk **31** driven by the motor is opposed to a disk **32** splined to a shaft **34**. A spring **35** and pivoted lever arm **36** normally hold the disk **32** spaced from the disk **31**, and in engagement with a fixed braking surface **38**. Energizing of a solenoid **40** is adapted to move the disk **32** into engagement with the disk **31**.

A belt **42** connects the shaft **34** with a shaft **41** carrying a worm **42** in mesh with a worm wheel **44**. A chain **46** and sprockets connect the worm wheel with the adjacent roll **22**. The motor is rotated in a direction to drive the band **24** in the direction of the arrow when the solenoid **40** is energized.

The circuit to the solenoid **40** is under the control of a switch **47** operated by a second solenoid **48**. Closing of the hand switch **50** energizes the solenoid **48** from a line circuit **49** which thereupon closes switches **47** and **52** in both solenoid circuits. The circuit through switch **52** includes an automatic control switch **54** and a normally closed manual switch **56**. The switch **54** is mounted on and adjustable along the bars **57** supported on a frame **58** and extending transversely over the top reach of the band **24**. The switch **54** includes an arm **60** normally in contact with the band and is closed when in such contact. Raising of the arm opens the switch and de-energizes the solenoid **48**, whereupon switch **47** opens and de-energizes the solenoid **40**. Opening of the manual switch **56** will also function to de-energize the solenoids.

One portion of the band **24** is provided with a plurality of parallel rows of stop elements **62**, and the switch **54** and arm **60** are adjustable selectively to bring the arm into contact with any one of the rows. Each row contains a plurality of stop elements for raising the arm **60** and stopping the fabric strip, the stops in each row being differently positioned to provide for differently spaced treating operations. When punching the strip piece **64** shown in Fig. 4, the four stops **62** in the row selected will be positioned to stop the machine at locations to be punched as illustrated in Fig. 4. An additional stop element **65** is also provided in each row following the elements **62** for stopping the band at the completion of its cycle of punching operations in each piece. The punched piece is then cut off along a straight edge indicated at **68** and, when the band is again operated, the punched piece will be carried to and dropped into a receiving box **70**. A shield **72** is carried on the outer end of the frame **20** for receiving the punched strip and conducting it to the box.

Following the stop elements **65** is a stop abutment **66** common to all the rows for stopping the band at the starting position illustrated in the drawing. After each piece **64** is cut off, the band is again started by closing the switch at **50** and the abutment **66** thereafter automatically stops the band in the starting position illustrated.

The mechanism is adapted to complete one strip piece **64** at each cycle of its opertaion, i. e. movement of the band **24** from the starting position through the cycle and to the stop position wherein the stop **65** has raised the switch arm **60**. Different sized mattresses require pieces **64** of different lengths and the stops **65** are positioned to provide for this variation. At the end of each cycle, the finished piece is cut off along the line **68**. The machine is then started and continues to function until stopped by the abutment **66** which represents the starting position for the next cycle. The free end of the strip **11** is engaged with the pins **26** on the band and the next cycle is then started.

The operator starts and stops the motor **28** at the switch **30** and the motor is adapted to run continuously during the operation of the machine. When the strip **11** has been attached to the band, as above described, the operator presses the switch **50** to start the band. The first stop element **62** coming in contact with the arm **60** thereafter opens the switch **54—60** and stops the band with the strip in proper position for the first punching. After stepping on the treadle **16** and performing the punching operation, the operator again closes the switch **50** whereupon the strip is moved to the next punching posi-

tion and the punching operation is thereupon repeated. These operations are repeated until the strip piece **64** has been completed and is ready to be cut off along the line **68**.

Having thus disclosed my invention what I claim as new and desire to secure by Letters Patent is:

1. A fabric strip measuring mechanism, comprising an endless band, means supporting the band for longitudinal movement along a predetermined path, power means for driving the band, means for attaching one end of a fabric strip to the band, means for starting the power means to move the band and carry the strip parallel therewith, and means including a plurality of parallel and transversely spaced rows of stop elements disposed in predetermined spaced relation on and longitudinally along the band and an arm selectively adjustable into contact with the rows for automatically and selectively stopping movement of the band at predetermined lengths of movement thereof.

2. The mechanism defined in claim 1 plus an abutment on the band common to all said rows for stopping the band in a predetermined position.

References Cited in the file of this patent

UNITED STATES PATENTS

2,298,492	Longfield	Oct. 13, 1942
2,369,290	Foard	Feb. 13, 1945

FOREIGN PATENTS

219,369	Germany	Feb. 26, 1910