US00D368255S

United States Patent [19]

Sasaki et al.

[11] Patent Number: Des. 368,255

[45] Date of Patent: **Mar. 26, 1996

[54] **BUSINESS CARD SCANNER**

[75] Inventors: **Kazunari Sasaki**, Nagano; **Hironori Shirakura**, Fukuoka, both of Japan

[73] Assignees: **Seiko Epson Corp.**, Nagano; **Mitsumi Electric Co., Ltd.**, Fukuoka, both of Japan

[**] Term: **14 Years**

[21] Appl. No.: **13,451**

[22] Filed: **Sep. 24, 1993**

[30] **Foreign Application Priority Data**

Mar. 26, 1993 [JP] Japan 5-8712

[52] **U.S. Cl.** **D14/107**

[58] **Field of Search** D14/114, 116, D14/105, 107; 235/329, 493, 462, 472, 380, 382, 382.5; 354/80–82; 382/58–69; 250/203.1, 216, 566, 568

[56] **References Cited**

U.S. PATENT DOCUMENTS

D. 342,492	12/1993	Wang	D14/116
D. 348,059	6/1994	Chen	D14/116
D. 350,950	9/1994	Liu	D14/116
D. 352,705	11/1994	Shalvi	D14/116
5,113,060	5/1992	Wike, Jr. et al.	235/462 X

OTHER PUBLICATIONS

"Hyperelectronic Management Notebook PV–F1" published by Sharp Corp., Apr. 1993.

"Card Reader PV–BR1" published by Sharp Corp., Apr. 1993.

"SCANEO" (Card reader NR–1000), Jul. 1991.

Satz, "Electronic Card File Image Brain NS–IB1", Feb. 1991.

Primary Examiner—M. H. Tung

Attorney, Agent, or Firm—Oliff & Berridge

[57] **CLAIM**

The ornamental design for a business card scanner, as shown and described.

DESCRIPTION

FIG. **1** is a front view of the inventive design for a business card scanner;

FIG. **2** is a top view of the inventive design of FIG. **1**;

FIG. **3** is a bottom view of the inventive design of FIG. **1**;

FIG. **4** is a left side view of the inventive design of FIG. **1**;

FIG. **5** is a right side view of the inventive design of FIG. **1**;

FIG. **6** is a rear view of the inventive design of FIG. **1**;

FIG. **7** is a cross-sectional view of the inventive design of FIG. **1** taken along the lines **77** of FIG. **1**;

FIG. **8** is a perspective view of the inventive design of FIG. **1** with a cover of the business card scanner closed, on an enlarged scale;

FIG. **9** is a perspective view of the inventive design of FIG. **1** with a cover of the business card scanner open, on an enlarged scale;

FIG. **10** is a front view of the inventive design of FIG. **1** with the cover open;

FIG. **11** is a top view of the inventive design of FIG. **1** with the cover open;

FIG. **12** is a bottom view of the inventive design of FIG. **1** with the cover open;

FIG. **13** is a left side view of the inventive design of FIG. **1** with the cover open;

FIG. **14** is a right side view of the inventive design of FIG. **1** with the cover open; and,

FIG. **15** is a rear view of the inventive design of FIG. **1** with the cover open.

1 Claim, 5 Drawing Sheets

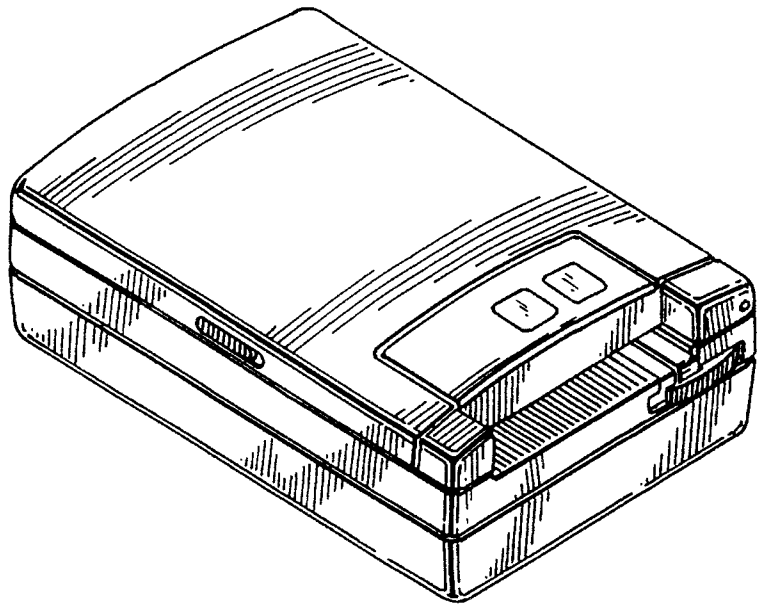

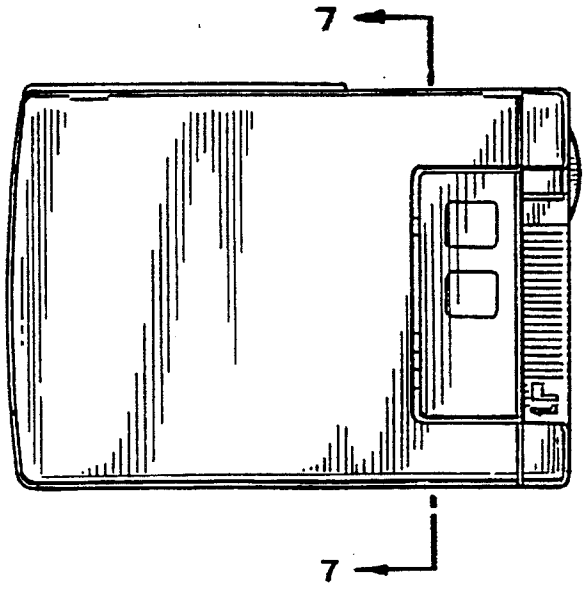

FIG. 1

FIG. 2

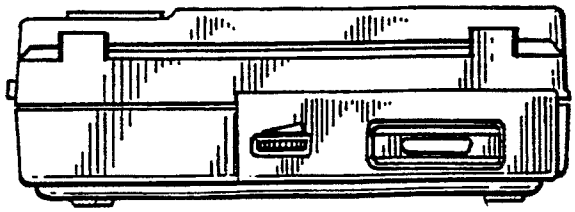

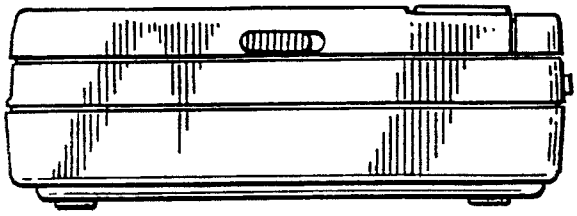

FIG. 3

FIG. 4

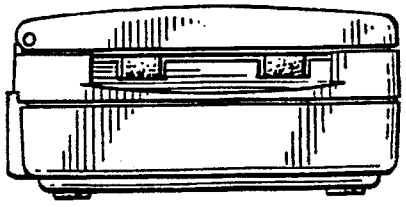

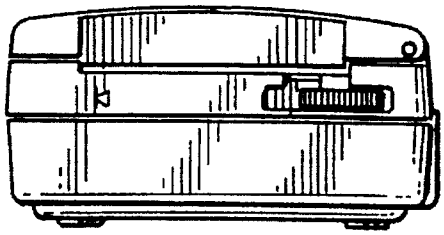

FIG. 5

FIG. 6

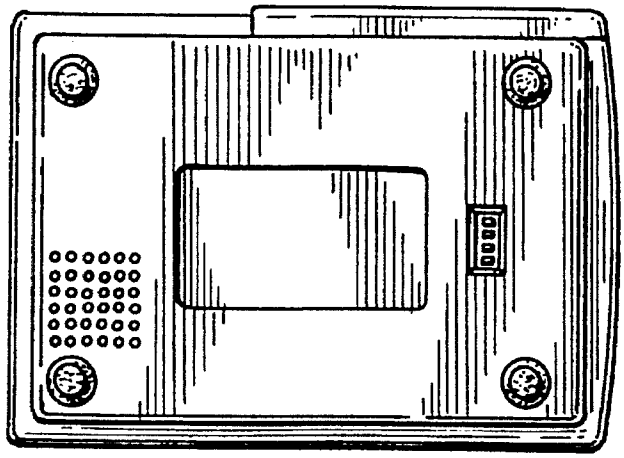

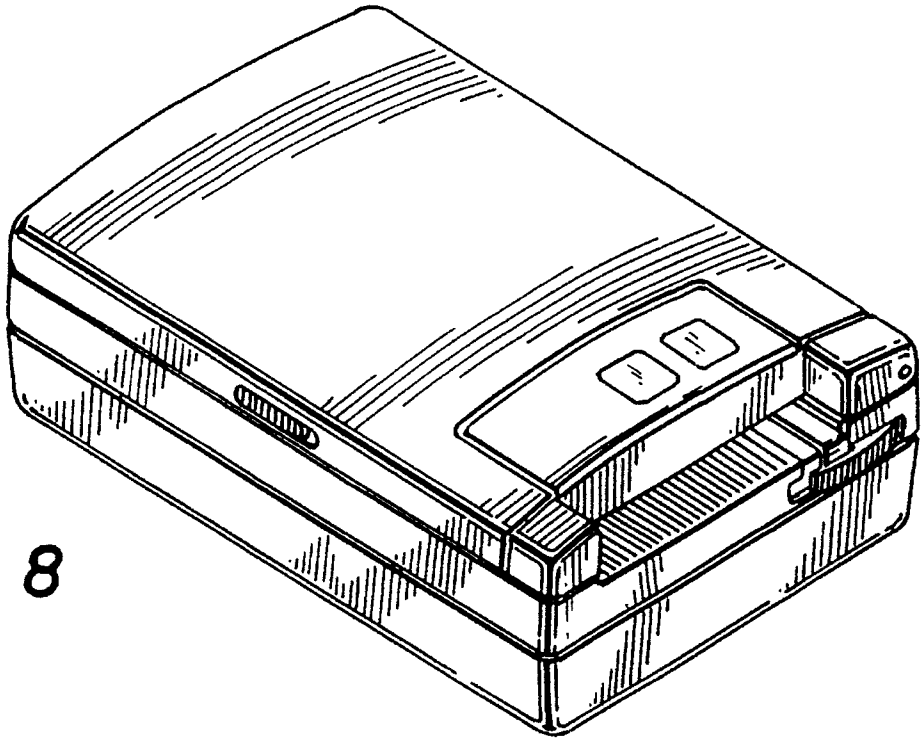

FIG. 8

FIG. 14

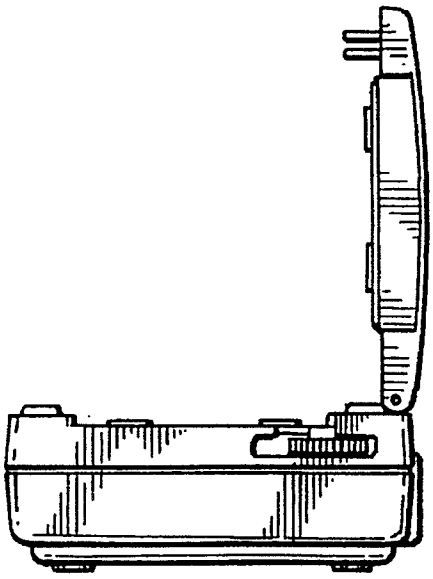

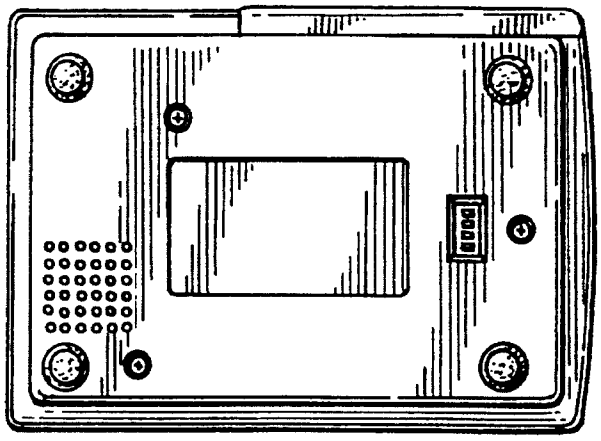

FIG. 15

FIG. 7

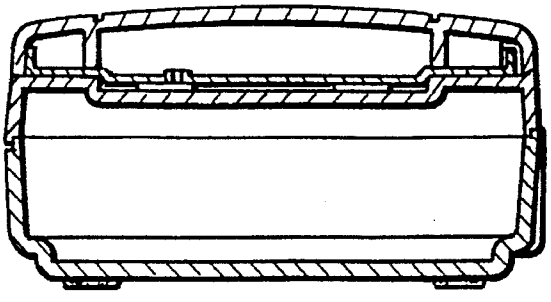

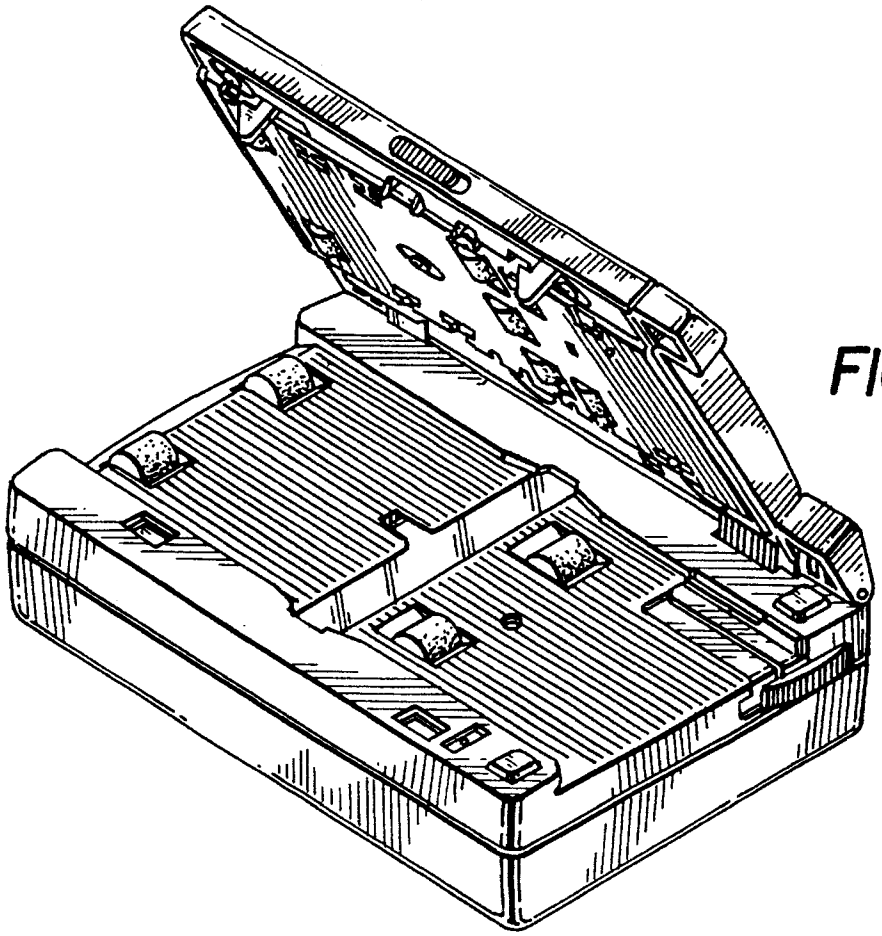

FIG. 9

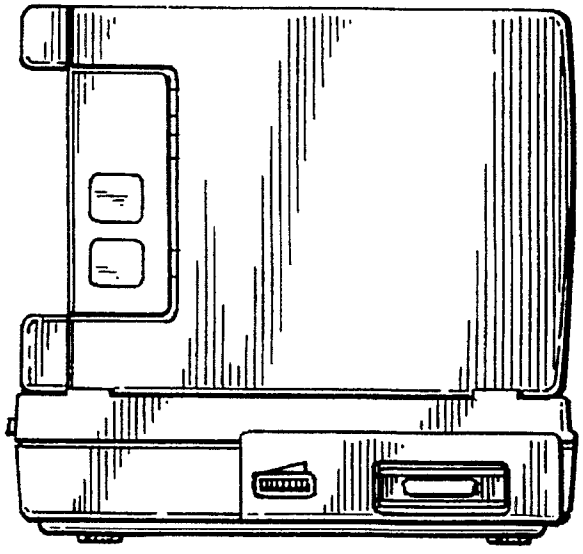

FIG. 11

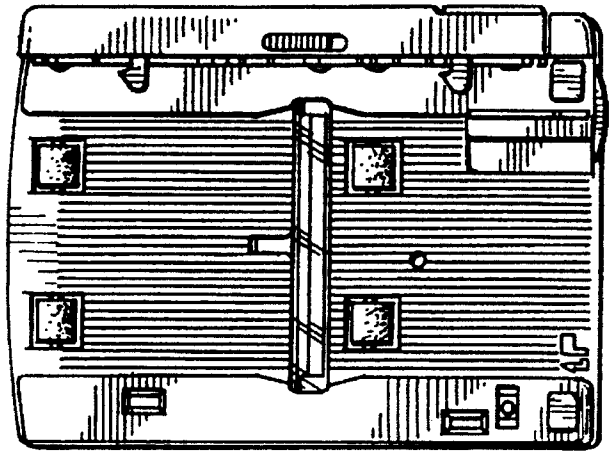

FIG. 10

FIG. 12

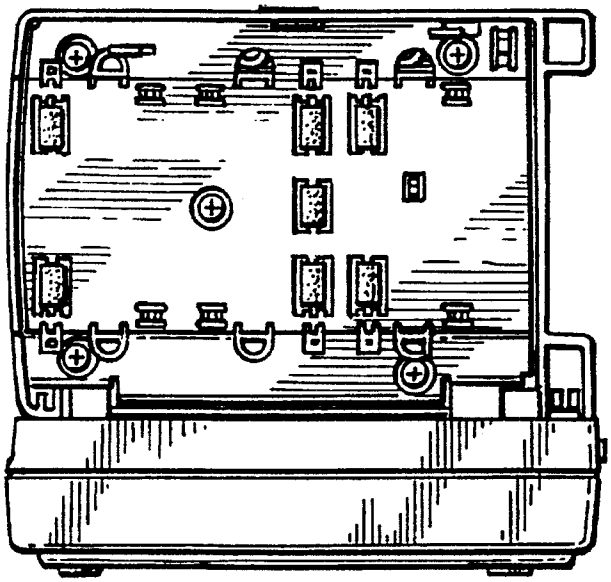

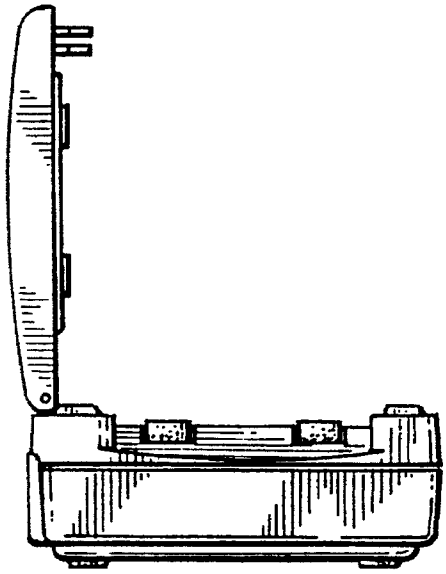

FIG. 13