(No Model.) 2 Sheets—Sheet 1.

D. J. CAMPBELL.

ROPE TIGHTENING LEVER.

No. 590,254. Patented Sept. 21, 1897.

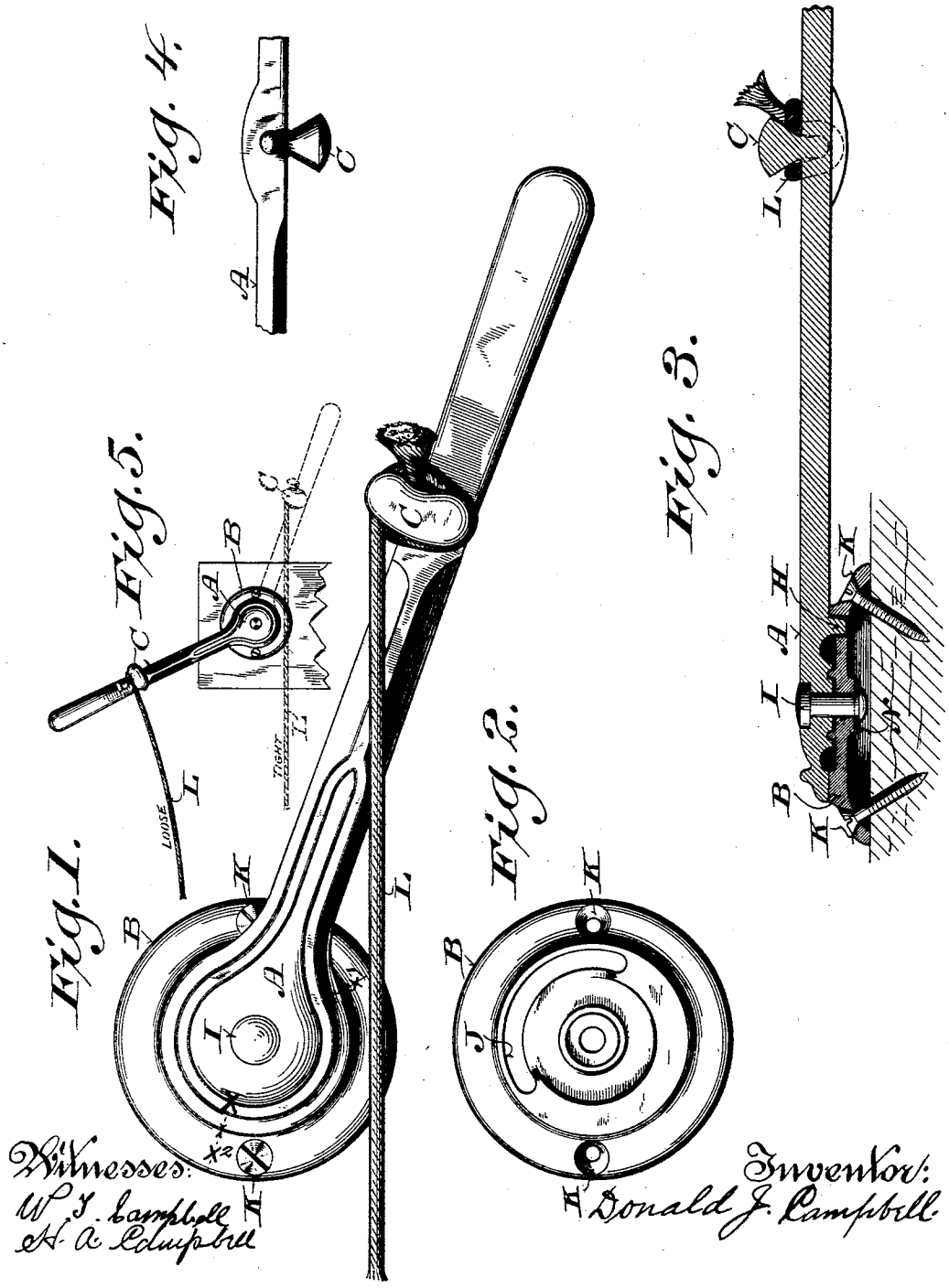

Witnesses:
W. I. Campbell
H. A. Campbell

Inventor:
Donald J. Campbell

THE NORRIS PETERS CO., PHOTO-LITHO., WASHINGTON, D. C.

(No Model.) 2 Sheets—Sheet 2.

D. J. CAMPBELL.

ROPE TIGHTENING LEVER.

No. 590,254. Patented Sept. 21, 1897.

Fig. 8.

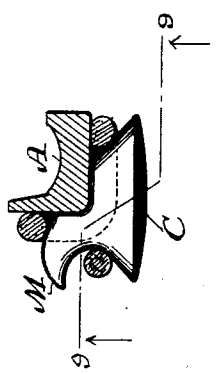

Fig. 9.

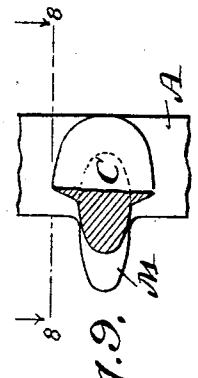

Fig. 10.

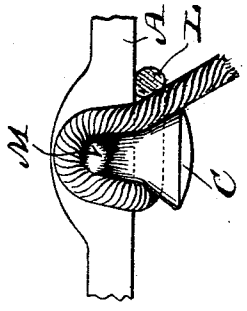

Fig. 7.

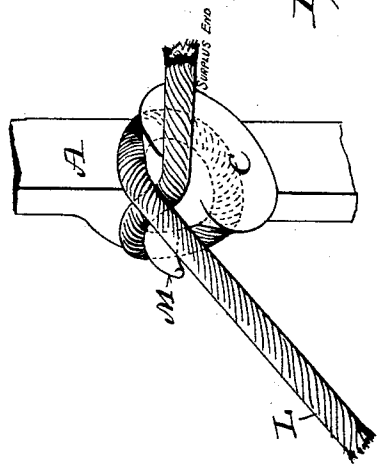

Fig. 6.

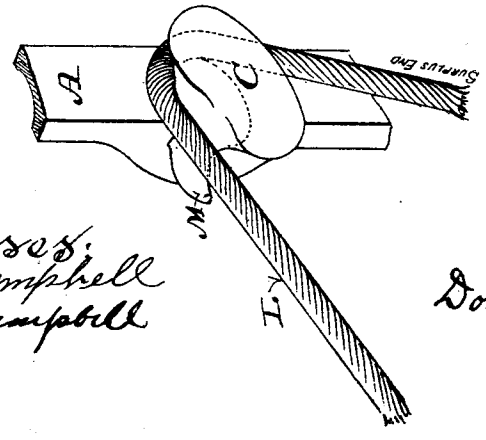

Witnesses:
Wm. J. Campbell
H. A. Campbell

Inventor:
Donald J. Campbell

THE NORRIS PETERS CO., PHOTO-LITHO., WASHINGTON, D. C.

UNITED STATES PATENT OFFICE.

DONALD J. CAMPBELL, OF MILWAUKEE, WISCONSIN.

ROPE-TIGHTENING LEVER.

SPECIFICATION forming part of Letters Patent No. 590,254, dated September 21, 1897.

Application filed September 28, 1896. Serial No. 607,276. (No model.)

To all whom it may concern:

Be it known that I, DONALD J. CAMPBELL, a citizen of the United States, residing in the city of Milwaukee, county of Milwaukee, and State of Wisconsin, have invented a new and useful Rope-Tightening Lever, of which the following is a specification.

My invention relates to a rope-tightener, the two principal parts being, first, a circular base-plate which is to be screwed fast to a perpendicular surface of a tree, wooden building, post, &c., and, second, a combined knotter and tightening-lever which is riveted to said base-plate. There are two minor parts (a rivet and washer) described hereinafter.

The objects of my invention are, first, to enable any one who uses the tightener to tie the knot in an instant; second, to give the rope an extra draw with the lever after the rope has been drawn as tight as it can be drawn with both hands and the knot tied. I attain these objects by the mechanism illustrated in the accompanying drawings, in which—

Figure 1 is a full view of the tightener complete as it appears when fastened in place. Fig. 2 is the base-plate. Fig. 3 is a sectional view of the tightener complete. Fig. 4 is a front view of the knotter C. Fig. 5 is a miniature drawing showing the positions of the lever before and after the final draw is given to the rope. Figs. 6 and 7 are detail perspective views of the knotter and illustrate the method of knotting the rope around the same. Fig. 8 is a detail sectional view of the knotter on line 8 8 of Fig. 9. Fig. 9 is a section on the line 9 9 of Fig. 8; and Fig. 10 is a similar view to Fig. 4, showing the rope in place.

Similar letters refer to similar parts throughout the several views.

A is the tightening-lever.

B is the base-plate.

C is the knotter.

I is the rivet which holds the parts A and B together.

N is a washer to be placed on the rivet I after the rivet has been passed through parts A and B, respectively, the washer to remain on the rivet and the bur of the rivet to be formed over it.

H, Fig. 3, is a lug or stop which works in the slot J, Fig. 2, and stops the swing of the lever A.

K represents the screw-holes.

X, Fig. 1, is a point which would be intersected by a straight line passing through the center of the lever A from end to end.

X′ is the point where X stands before having given the rope the final draw.

X^2 is the point where X stands after having given the rope the final draw.

L, Fig. 1, shows the position of a rope when drawn tight with the tightening-lever A.

Upper L, Fig. 5, shows the position of a rope before having given the final draw with lever A.

Lower L, Fig. 5, shows the position of a rope after having given the final draw with lever A.

The tightener is fastened in place with two screws, the two screw-holes being set on a horizontal line, as shown in Fig. 1.

To tighten a rope, proceed as follows: Having adjusted the rope ready to be tightened, move the lever A up and ahead as far as it will go, which will leave X upon the lever at X′ upon the base-plate, and with both hands draw the rope over the knotter C as tight as you can. Then draw the rope down behind and under the knotter and place the thumb of the right hand on the rope under the knotter to keep the rope from slipping back, hold the surplus rope in the left hand close up to the knotter, pass it (the surplus rope) ahead even with the front part of the lever, then to the right and upward, and when even with the top of the knotter C draw it (the surplus rope) over the knotter and between the knotter and the tighter part of the rope. The knot is now in shape and is made firm and the rope given the final draw by moving the lever A backward with the right hand until X stands at X^2. The tight part of the rope will rest across the surplus part in such a way that the rope cannot slip back after knotting.

The knotter C is substantially oval in form with a depression in one side to receive the rope and narrows down at its base to form a tapered groove, where it connects to the lever A, in which the rope rests, and projecting from one side of the tapered groove at the

base of said oval is a horn M, (see Figs. 8 to 10, inclusive,) around which the loose end of the rope is given a half-turn before it passes across the path of the groove which encircles the oval. The rope L then compresses this loose end between it and the groove and prevents it from slipping.

The lever A when in position to receive the rope leans ahead of a vertical position just enough so that the surplus rope can be easily slipped between the tighter part of the rope and the knotter C, and after the lever A is drawn back (after having given the rope the final draw) the top of the rope will be about an inch below the center of rivet I, which will prevent the lever A from being drawn ahead by the tension of the rope.

Having thus fully described my invention, I claim as new and desire to secure by Letters Patent—

In a rope-tightener, a base-plate having a segmental slot therein extending approximately from a vertical line drawn to the center on which the segmental slot is described, to a point at an angle from said line of about one hundred degrees, a lever fulcrumed to said plate concentric to the slot, a lug projecting from the lever into said segmental slot, and a rope-knotter attached to the lever at a suitable distance from its fulcrum, substantially as described.

DONALD J. CAMPBELL.

Witnesses:
WM. T. CAMPBELL,
H. A. CAMPBELL.