Nov. 14, 1950 E. F. BRITTEN, JR 2,530,149

CALCULATING MACHINE

Filed June 28, 1944 5 Sheets-Sheet 1

FIG. 1.

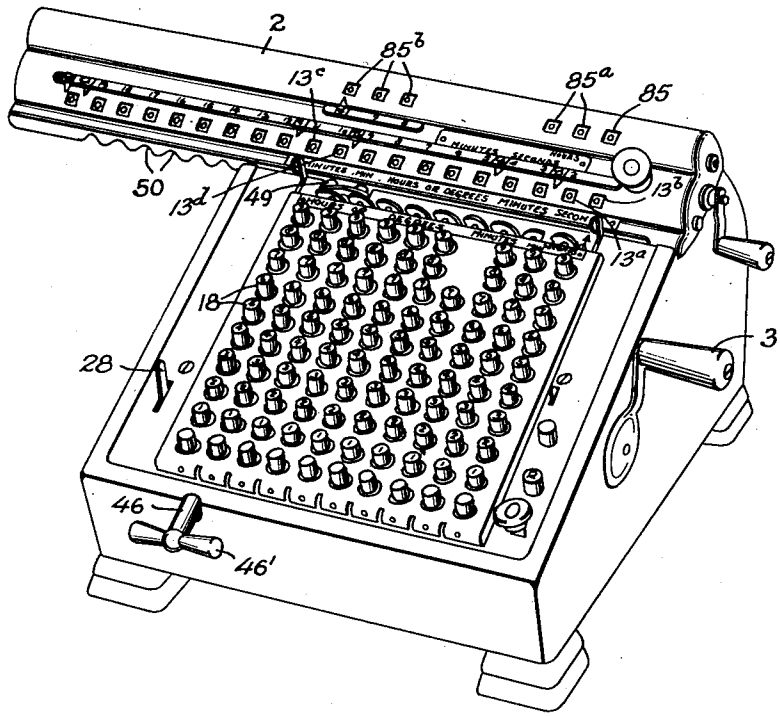

FIG. 10.

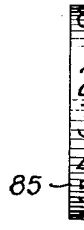

FIG. 10a.

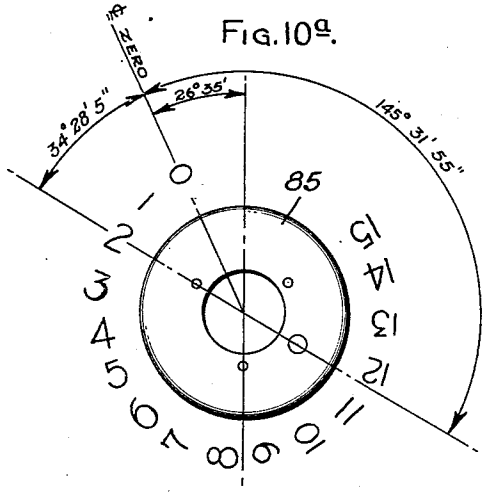

Inventor

Edwin F. Britten, Jr.

By E. W. Anderson & Son.

Attorney

Nov. 14, 1950 E. F. BRITTEN, JR 2,530,149

CALCULATING MACHINE

Filed June 28, 1944 5 Sheets-Sheet 2

FIG. 4.

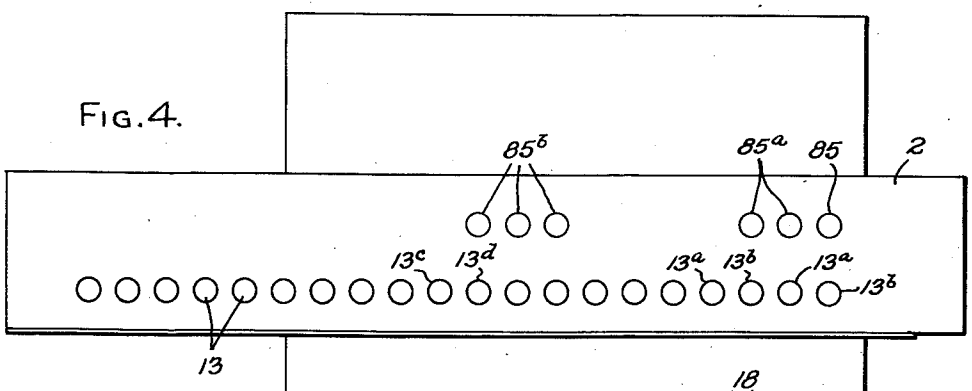

FIG. 2.

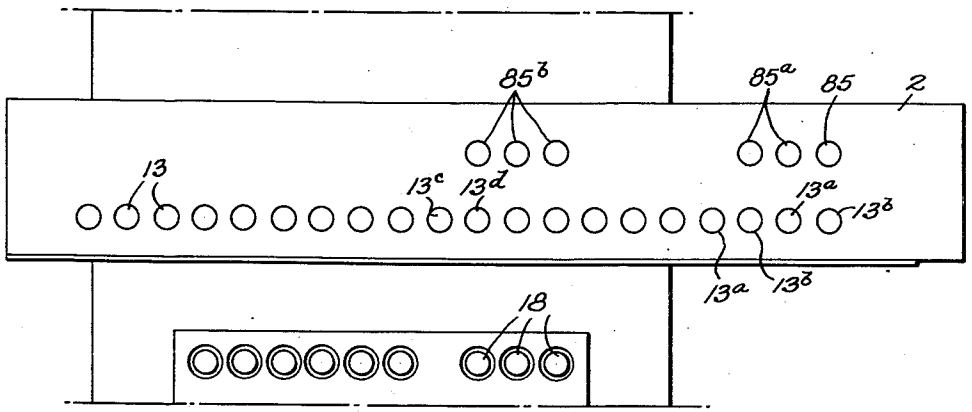

FIG. 3.

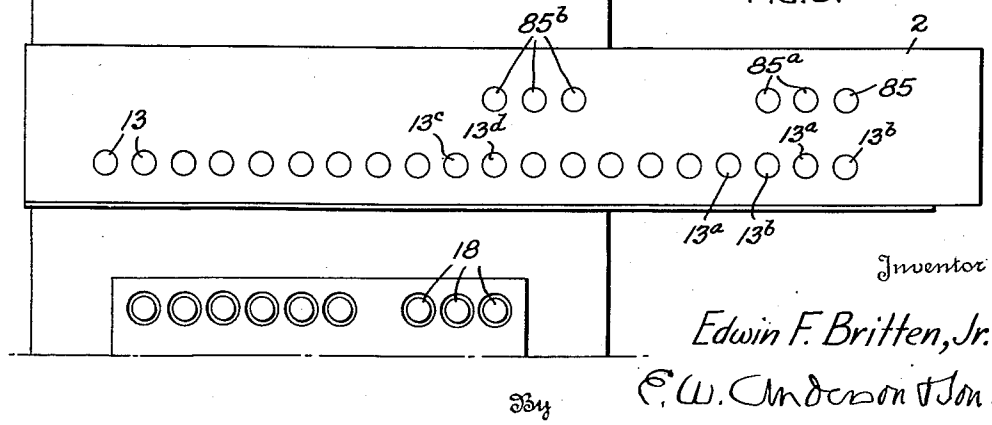

Inventor

Edwin F. Britten, Jr.

By E. W. Anderson & Son.

Attorneys

Nov. 14, 1950 E. F. BRITTEN, JR 2,530,149

CALCULATING MACHINE

Filed June 28, 1944 5 Sheets-Sheet 5

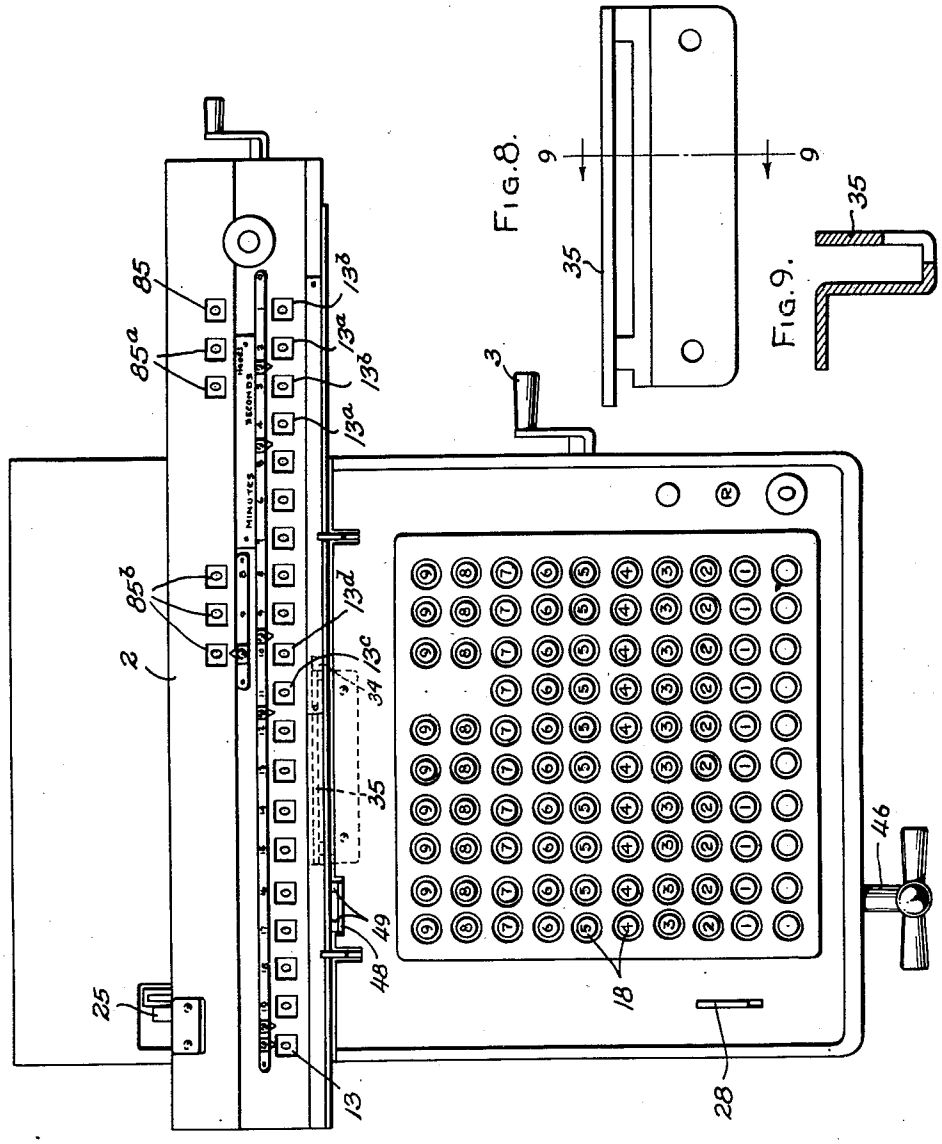

FIG. 8.

FIG. 9.

FIG. 5.

Inventor
Edwin F. Britten, Jr.
By E. W. Anderson & Son.
Attorney

Nov. 14, 1950 E. F. BRITTEN, JR 2,530,149

CALCULATING MACHINE

Filed June 28, 1944 5 Sheets-Sheet 4

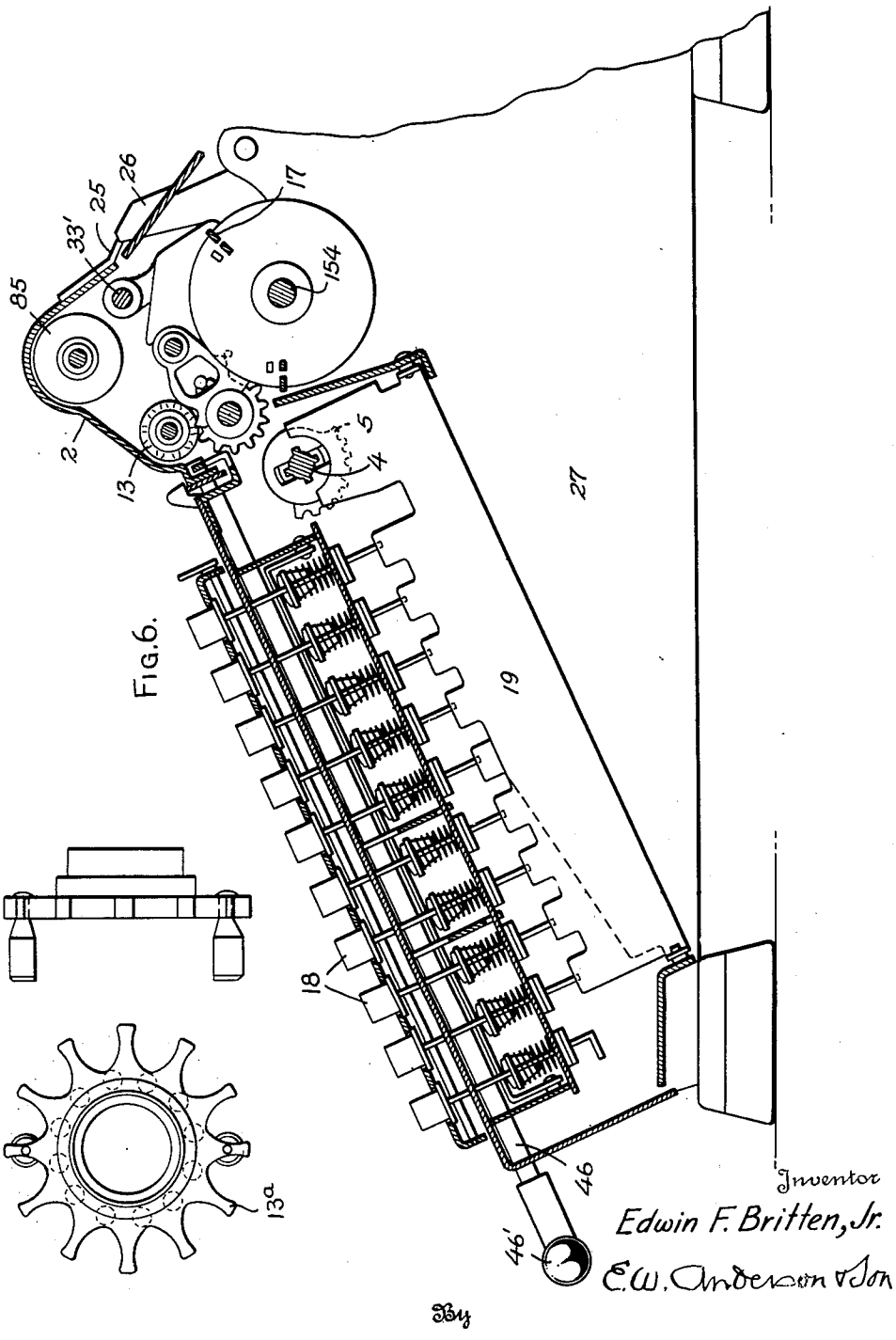

FIG. 6.

FIG. 11a.

FIG. 11.

Inventor
Edwin F. Britten, Jr.
E. W. Anderson & Son
By
Attorney

Nov. 14, 1950 E. F. BRITTEN, JR 2,530,149

CALCULATING MACHINE

Filed June 28, 1944 5 Sheets-Sheet 5

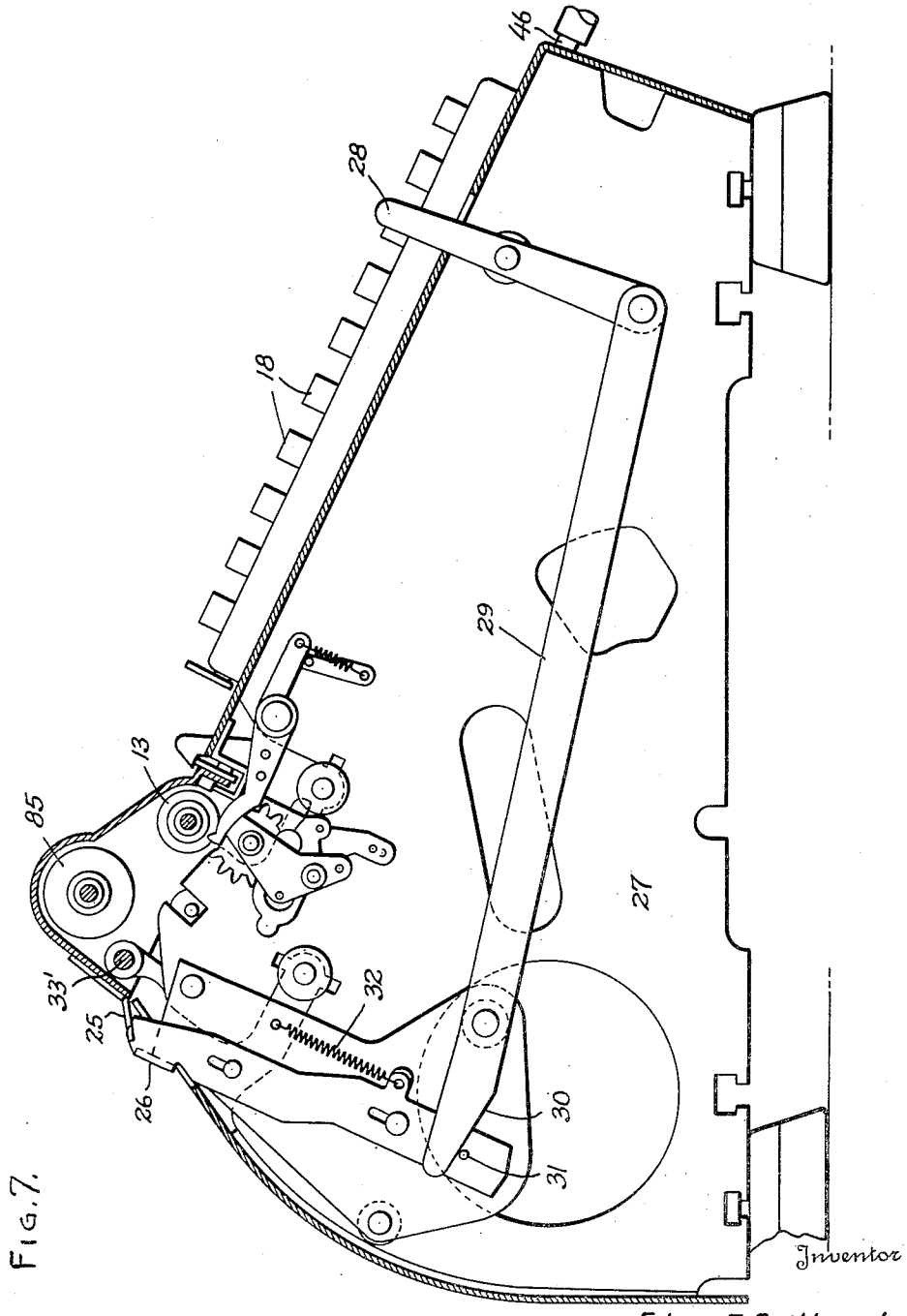

FIG. 7.

Inventor

Edwin F. Britten, Jr.

By E. W. Anderson & Son

Attorneys

Patented Nov. 14, 1950 2,530,149

UNITED STATES PATENT OFFICE

2,530,149

CALCULATING MACHINE

Edwin F. Britten, Jr., Short Hills, N. J., assignor to Monroe Calculating Machine Company, Orange, N. J., a corporation of Delaware

Application June 28, 1944, Serial No. 542,490

1 Claim. (Cl. 235—63)

1

The invention relates to calculating machines for the use of navigators of aircraft, an object of the invention being to provide a simple and accurate machine especially designed to take care of air navigational calculations, which principally involve the addition and subtraction of hours, minutes and seconds; degrees, minutes and seconds, or of degrees, minutes and tenths of a minute. Another object is to provide such a machine for taking care of calculations involving the addition and/or subtraction of minutes and seconds (double sixtieths), or of minutes (single sixtieths) and tenths of a minute, thus relieving the navigator from fear of error and mental fatigue and permitting concentration upon selection of the proper data to determine a line of position. Another object is to provide such a machine capable of also taking care of calculations involving the addition and/or subtraction of whole numbers to six digits, thus being useful for navigational calculations found when using the publication of the Hydrographic Office of the U. S. Naval Observatory known as H. O. 211; or of calculations involving the multiplication and/or division of whole numbers or of whole numbers and decimals, which is of value in figuring average grades in training centers. Another object is to provide such a machine capable of taking care of calculations involving the conversion of time to arc or alternatively the conversion of arc to time. Another object is to provide such a machine capable of simply and accurately taking care of any figure problem of air navigation. Other objects and advantages will appear hereinafter or will be obvious.

The invention consists in the novel construction and combinations of parts, as hereinafter set forth in the claim.

In the accompanying drawings:

Figure 1 is a perspective view of a machine embodying the invention whereof the carriage is displaced to the extreme left.

Figure 2 is a diagrammatic plan view of said machine, whereof the carriage is displaced to the right, parts being broken away.

Figure 3 is a view similar to Figure 2, whereof the carriage is shifted two denominations to the right from Figure 2 position.

Figure 4 is a view similar to Figure 2, whereof the carriage is shifted two denominations to the right from Figure 1 position.

Figure 5 is a plan view of the machine, whereof the carriage is displaced to the right to Figure 2 position, showing the bridge and the carriage positioning pin in dotted lines.

2

Figure 6 is an elevational section of the machine, taken through the keyboard, with parts broken away.

Figure 7 is a left side elevation of the machine, with parts in section.

Figure 8 is a detail plan view of the bridge.

Figure 9 is a section on the line 9—9, Figure 8.

Figure 10 is a detail edge view of one of the counting wheels.

Figure 10*a* is a diagrammatic side view of the same.

Figure 11 is a detail side view of one of the numeral wheels.

Figure 11*a* is a detail edge view of the same.

In these drawings, the invention is shown as applied to a Monroe calculating machine of the model disclosed in the U. S. patent to Overbury No. 1,964,211, dated June 26, 1934, with omission of the motor and certain parts.

REGISTERING MECHANISM

According to known construction, amounts set up on the differential actuating gears 5 (Fig. 6), by means of the keys 18 and the setting bails 19 are registered upon the numeral wheels, all of which are primarily designated 13 and certain of which have distinguishing exponents, upon rotation of the actuator shaft 4 and the shaft 154 upon which the tens carry members 17 are mounted. Shafts 4 and 154 are connected with hand crank driving devices through a known train of gearing disclosed in the above named Overbury patent which is adapted for forward or reverse rotation to register additively or subtractively upon the numeral wheels 13. The usual hand crank 3 is provided upon the actuator shaft 4. The number of rotations of the shafts 4 and 154, representing the operative cycles of the machine, are registered upon suitable multiplier-quotient or counting wheels, all of which are primarily designated 35 and certain of which have distinguishing exponents.

The numeral wheels 13 and the counting wheels 35 are mounted upon a denominationally shiftable carriage 2, capable of being manually shifted step by step from denomination to denomination to the right or to the left by means of a rotary shaft 46 provided forwardly of the machine with an operating handle 46 and rearwardly with a double crank arm 48, pins 49 of which are located at the free ends of the arms and engage respectively first one and then the next of a series of longitudinal notches 50 in the lower forward edge of the carriage casing. The carriage may be lifted upon its hinge rod

connection with the stationary main frame to disengage the numeral wheels 13 from the intermediate gears between gears 5 and 13 and the carriage displaced while so lifted to a predetermined position or positions to the right or to the left, the carriage being then released to cause through gravity engagement or meshing of said gears in the new position.

GENERAL FEATURES

Amounts concerned in the calculations are first set up on the keyboard which comprises ten denominational rows of keys 18. The left side of the keyboard comprises six denominational rows of keys termed a "third" group and the heads of which are colored white and is used in setting up hours, or alternatively degrees, or alternatively whole numbers which may not be hours or degrees, or alternatively whole numbers and decimals. The right side of the keyboard comprises four denominational rows of keys, the first and second rows counting from the right having the heads thereof colored black (with exception of the 6, 7, 8 and 9 keys of the second row the heads of which are colored yellow for reasons that will be explained), and the third and fourth rows still counting from the right having the heads thereof colored red (with the exception of the 6 and 7 keys of the fourth row the heads of which are colored green for reasons that will be explained).

In this last named row the 8 and 9 keys are omitted for reasons that will be explained. These four rows of keys at the right side of the keyboard termed a "first" group are used in setting up minutes and seconds (double sixtieths), or alternatively, with respect to the second, third and fourth of these four rows termed a "second" group, are used in setting up minutes (single sixtieths), and tenths of a minute.

When the carriage is displaced to the extreme left (Fig. 1), which position is predetermined all calculations involving the addition and subtraction of minutes and seconds, (double sixtieths) values; or of conversions of arc to time or alternatively of conversions of time to arc involving multiplication and/or division may be performed. The carriage being so displaced to the extreme left, two adjacent pairs of the numeral wheels 13 to the extreme right termed a "first" group are aligned with said four rows of keys at the right side of the keyboard and are adapted to register minutes and seconds or double sixtieths values. Said second group of three wheels is thus constituted by the wheels 13*c*, 13*d* and the wheel immediately to the right of the wheel 13*d*, due to the fact that these two pairs of wheels are with respect to the second and fourth wheels 13*a* (Figs. 1, 2, 3, 4, 5, 11 and 11*a*) counting from the right, provided each with twelve teeth numbered 0, 1, 2, 3, 4, 5, 0, 1, 2, 3, 4, 5, and two carry pins, and with respect to the first and third wheels 13*b*, still counting from the right, are decimal numeral wheels the teeth of each of which are numbered 0, 1, 2, 3, 4, 5, 6, 7, 8, 9.

The carriage is provided with a group of three counting wheels each of which has nineteen teeth, one of said counting wheels 85 being adapted to register values from 1 to 15, sixteen teeth thereof being numbered 0, 1, 2, 3, 4, 5, 6, 7, 8, 9, 10, 11, 12, 13, 14, 15, the three remaining teeth of this wheel being without numbers. The 15 represents fifteen degrees used as the multiplier in the conversion of time to arc, as will be explained. The two others 85*a* of this group of counting wheels are adapted to register values in hours in the conversion of arc to time as will be explained, the teeth of each thereof being numbered 1, 2, 3, 4, 5, 6, 7, 8, 9, 9, 8, 7, 6, 5, 4, 3, 2, 1, 0, being the same as wheels 85*b* to be described.

In the conversion of arc to time the degrees, minutes and seconds of arc are divided by 15, to obtain hours, minutes and seconds, since the earth rotates fifteen degrees in one hour. The machine being incapable of effecting the direct division of an amount registered in degrees, minutes and seconds (involving decimal and double sixtieths values), by 15, the following method has been developed:

Since registrations of both arc and time involve sixtieths, 60 is selected as a denominator to replace 15. Then, since $\frac{1}{15}$ equals $\frac{4}{60}$, the amount in degrees, minutes and seconds is multiplied by 4 and divided by 60. The multiplication by 4 is accomplished by repeated addition, in the usual manner, and the product is divided by 60 by a shifting of values analogous to the shifting of the decimal point in decimal calculations. That is to say, the numeral wheels whereon have been previously registered degrees are now read as sixtieths of an hour, i. e. minutes, and those whereon have been previously registered minutes of arc are now read as sixtieths of minutes, i. e. seconds of time. The wheels whereon have been previously registered seconds of arc are customarily disregarded, but actually have registered thereon sixtieths of seconds of time. This completes the conversion to time, but since the minutes may exceed sixty, they may be divided by 60 to obtain hours, which are read from the counting or quotient wheels, upon the completion of the dividing operation.

When the carriage is displaced to the right, (Fig. 2) which position is predetermined all calculations involving single sixtieths addition and/or subtraction and moon sight corrections may be performed. In this rightward displaced position of the carriage, another or third pair of the numeral wheels 13 are aligned with the third and fourth of said four rows of keys at the right side of the keyboard and are adapted to register single sixtieths, (minutes) values, another numeral wheel 13 of the carriage adjacent one of said pair being simultaneously aligned with the second of said four rows and being a decimal numeral wheel adapted to register values in tenths of a minute. One, designated 13*c*, of said third pair of numeral wheels is provided with twelve teeth numbered 0, 1, 2, 3, 4, 5, 0, 1, 2, 3, 4, 5, and the other 13*d* of said third pair is a decimal numeral wheel.

The numeral wheels 13 intermediate said first and second groups of numeral wheels are termed a "third" group and are marked for decimal calculations, and the numeral wheels 13 to the left of said second group of numeral wheels are termed a "fourth" group and are also marked for decimal calculations.

Means are provided and described as follows which are effective in said rightward displaced position of the carriage (Fig. 2) to arrest the carriage and to lock it against being shifted in either direction by said manipulable means, and means are provided and also described as follows for releasing the locking means to permit further shifting of the carriage two denominations to the right (Fig. 3) by said manipulable means in the performance of straight multipli-

cation and division operations and for any addition or subtraction of logarithms or of whole numbers, such as are used in H. O. 211 previously referred to; that is to say in the solution of problems involving decimal denominator values. For these purposes, the carriage is provided in rear with a plate having an offset stop lug **25**, which, when the carriage is displaced to the right, abuts against the upper end of a stop bar **26** (Figs. 5 and 7) to arrest the carriage, said stop bar being slidably mounted upon an end plate **27** of the stationary framing of the machine. A lever **28** is fulcrumed to said end plate and has pivotal connection with a link **29** slidably mounted upon said end plate and provided in rear with a cam edge **30** engaging a pin **31** of said stop bar. Upon manipulation of said lever **28**, said link will be moved rearwardly and the cam edge of the link will depress said stop bar against the tension of its retracting spring **32** to move the upper end of the stop bar out of the path of movement of said stop lug **25** of the carriage, whereupon the carriage may be shifted two denominations to the right to Fig. 3 position by said manipulable means as above stated, when the end plate of the carriage frame will engage the known spring stop mounted upon the carriage hinge rod **33'** to block further denominational shifting of the carriage to the right. The carriage being so displaced to the right (Fig. 2) and its movement arrested by said stop lug and stop bar engagement as aforesaid, shifting of the carriage to the left by said manipulable means is also prevented, due to a carriage positioning pin **34** (Fig. 5) which projects rearwardly from the front of the carriage casing, abutting against the right hand end of a bridge **35**, mounted upon the stationary framing, so that the carriage is locked against being shifted in either direction by said manipulable means.

When the carriage is displaced to the extreme left (Fig. 1), it is capable of being shifted to the right by said manipulable means to the extent of two denominations only, to Fig. 4 position (Fig. 4), whereupon any further shifting to the right by said manipulable means is prevented by the abutment of the said carriage positioning pin **34** against the left hand end of said bridge **35**.

The carriage being lifted by hand upon its hinge rod connection with the stationary framing for purpose of displacement to the right or to the left as explained, means are provided to maintain it in lifted position during the displacement from one to the other of the said predetermined positions of Figs. 1 and 5 including the aforesaid bridge **35** upon the horizontal upper edge of which the carriage positioning pin **34** will ride.

The heads of the 6 and 7 keys of the fourth of the four rows to the right of the keyboard are colored green, these keys being used in the performance of calculations involving moon sight corrections. For this purpose the 6 key has a value of 10 and the 7 key has a value of 11, that is to say the 6 key stem adjusts the setting bail **19** related to the next higher denomination to the same extent as does the 1 key stem of the next higher denomination, and the 7 key stem adjusts the setting bail **19** of the related denomination and also the setting bail of the next higher denomination to the same extent as do the stems of the 1 keys of these two denominations.

The heads of the 6, 7, 8 and 9 keys of the second row of the keyboard counting from the right are colored yellow, the reason for this being that the keys from 0 to 5 inclusive only of this particular row are used in setting values for the registration of seconds (double sixtieths), in the leftward displaced position of the carriage. The keys from 0 to 9 inclusive of this same row are used in setting values in the machine for the registration of tenths of a minute in the rightward displaced position of the carriage.

The following patents and publications are made of record for disclosure in this case: 1,964,211, June 26, 1934, Overbury, previously mentioned; 1,468,992, September 25, 1923, Chase; Monroe Navigation Machine, Instructions and Applications, prepared under direction of Navigation Training Section, Training Division, Bureau of Aeronautics, U. S. Navy Department, Annapolis, Maryland, Copyright 1943 by Monroe Calculating Machine Co.

A second group of three counting wheels **85b** is spaced to the left of the first group of counting wheels by four denominations and all three of these wheels **85b** have nineteen points, the teeth thereof being each numbered 1, 2, 3, 4, 5, 6, 7, 8, 9, 9, 8, 7, 6, 5, 4, 3, 2, 1, 0. This second group of counting wheels is used for instance in the multiplication of whole numbers with the carriage displaced to the right.

Following are examples of a few representative computations:

TO ADD OR SUBTRACT (WHOLE NUMBERS)

(Depress repeat key.)

Addition (Carriage at right), Figs. 2 and 5

Note: Set whole numbers in white rows of keys.

Keyboard	1564	Forward turn operating crank
Keyboard	10777	Forward turn operating crank
Lower dials	12341	Total

Subtraction

Lower dials	12341	
Keyboard	1424	Backward turn operating crank
Lower dials	10917	Remainder

TO MULTIPLY (IN SIXTIETHS—CARRIAGE AT LEFT), FIG. 1

To convert time to arc

(Depress repeat key.)

Step 1: Set $5^h\ 37^m\ 12^s$ on keyboard.

Step 2: To multiply by 15, number of degrees in one hour, turn crank forward until 15 appears in first right upper dial window.

Step 3: Result in lower dials 84° 18' 00''. This calculation results in conversion of time to arc.

TO MULTIPLY (WHOLE NUMBERS—CARRIAGE AT RIGHT), FIGS. 2 AND 5

Example: $436 \times 246 = 107256$.

(Depress repeat key.)

Step 1: Set 436 on right side of rows of white keys.

Step 2: To multiply by 6, turn crank forward until 6 appears in the first window of the left group of three upper dials. Lower dials show 2616.

Step 3: Hold carriage release latch down with middle finger of left hand, and shift carriage with thumb one place to the right.

Step 4: To multiply by 4, turn crank forward until 4 appears in second window of the left group of three upper dials. Lower dials show 20056.

Step 5: Move carriage one place to right with shift lever, unnecessary to use carriage release latch.

Step 6: To multiply by 2, turn crank forward until 2 appears in third window of the left group of three upper dials. Lower dials show final result 107256, which is a proven result since keyboard shows 436 depressed, upper dials show 246 correct multiplier, therefore, product must be correct.

TO DIVIDE (IN SIXTIETHS—CARRIAGE AT LEFT)

To convert arc to time

(Depress repeat key.)

Step 1: Set 134° 47′ 35″ on keyboard.

Step 2: Prior to division process multiply by 4. To multiply by 4, turn crank forward until 4 appears in first right upper dial window. Lower dials show 539° 10′ 20″. Now convert degrees to hours by dividing by 60.

Step 3: Move carriage one place to right. Clear keyboard. Set 6 on keyboard in first right-hand row of white keys. (This is the equivalent of 60 since carriage has been moved.)

Step 4: To divide by 60, turn crank backwards until 539 in lower dials is less than 60. This takes 8 turns, upper dials show 8 hours, lower dials show 59 minutes 10 seconds. This calculation has converted arc to time.

TO DIVIDE (IN WHOLE NUMBERS—CARRIAGE AT RIGHT)

Example: 675÷27=25.

(Depress repeat key.)

Step 1: Move carriage to tenth position by pulling forward carriage release latch.

Step 2: To divide 675 by 27, add 675 by setting 675 on extreme left side of keyboard and turning crank forward. Clear upper dials and keyboard only.

Step 3: Set 27 on extreme left of keyboard. Turn crank backwards until 67 is less than 27. This takes 2 turns leaving 135 in lower dials. If too many backward turns are made a bell will ring. Then take forward turns until bell rings again to correct.

Step 4: Move carriage one place to left. Turn crank backward until 135 is less than 27. This takes 5 turns leaving lower dials clear. Upper dials show quotient 25.

DEAD RECKONING

1–B required difference of latitude

Given	Lat 56°—21′ N	
	Lat 32°—53′ N	Subtract
Difference of	Lat 23°—28′	
Given	Lat 30°—14′ N	
	Lat 42°—24′ S	Add
Difference of	Lat 72°—38′	

Machine application

(Carriage at right.)

Step 1: Add 56° 21′ N. Forward turn crank.

Step 2: Subtract 32° 53′ N. Backward turn crank.

Step 3: Result in lower dials 23° 28′, difference of latitude. Clear entire machine.

Step 4: Add 30° 14′ N. Forward turn crank.

Step 5: Add 42° 24′ S. Forward turn crank.

Step 6: Result lower dials 72° 38′, difference of latitude. Clear entire machine.

DEAD RECKONING

1–C required difference of longitude

Given	Long 173°—14′ E	
	Long 151°—49′ E	Subtract
Difference of	Long 21°—25′	
Given	Long 163°—41′ E	
	Long 159°—34′ W	Add
	323°—15′	Subtract from 360°
Difference of	Long 36°—45′	

Machine application

(Carriage at right.)

Step 1: Add 173° 14′ E. Forward turn crank.

Step 2: Subtract 151° 49′ E. Backward turn crank.

Step 3: Result in lower dials 21° 25′, difference of longitude. Clear entire machine.

Step 4: Add 163° 41′ E. Forward turn crank.

Step 5: Add 159° 34′ W. Forward turn crank.

Step 6: Result in lower dials 323° 15′ is to be subtracted from 360°. Clear keyboard only.

Step 7: Copy to keyboard 323° 15′ from lower dials. Subtract once, backward turn of crank. If dials clear it proves correct transfer to keyboard. Subtract again, backward turn of crank. Clear keyboard only.

Step 8: Add 360°. Forward turn crank.

Step 9: Result in lower dials 36° 45′ is the difference of longitude.

CELESTIAL NAVIGATION PROBLEM

4–C finding line of position H. O. 214; body—sun (from D. R. position), January 1, 1943

					+ ⊙ −
W WE	14h—45m—48s 21 —16	F Ø			
ZT	14h—24m—32s	Jan. 1		I. C.	3.0′
ZD +	4 —00 —00	1943		R	1.9′
GCT	18h—24m—32s	Jan. 1		Z corr	2.0′
GHA	94°—08′			Corr (−)	2.9′
Corr	1 —08		D. R. Position	H_s 25° —	42′
GHA ⊙	95°—16′		Lat 38-58N	H_o 25° —	39.1′
λ	76°—30′ W		Long 76-30W		
LHA ⊙	18°—46′ W		Dec. 23-02S		
ALT	25°—29.9′				
(−)	1.9	−96 Δd		Z	N160.8° W
(+)	3.6	+26 Δt		Z_n	199.2°
(+)	1.9	+ ΔL			
H_c	25°—33.5′				
H_o	25°—39.1′				
"a"	5.6 mi T A				

Machine application

(Carriage at left.) Fig. 1.

Step 1: Add 14h 45m 48s. Forward turn crank.

Step 2: Subtract 21m 16s. Backward turn crank.

Step 3: Enter ZT from lower dials 14h 24m 32s. Clear keyboard.

Step 4: Add 4h. Forward turn crank. Enter lower dials result 18h 24m 32s G. C. T. Clear entire machine and move carriage to right. Figs. 2 and 5.

Step 5: Add 94° 08′. Forward turn crank.

Step 6: Add 01° 08′. Forward turn crank.

Step 7: Enter from lower dials 95° 16′ G H A ⊙.

Step 8: Subtract 76° 30′. Backward turn crank. Enter from lower dials 18° 46′, LHA ⊙. Clear entire machine.

Step 9: Release carriage latch and move carriage to tenth position. Set decimals: upper dials

8, keyboard 6 and lower dials 14. Set Δd correction factor .96 in keyboard at decimal (white keys). Multiply by 2 (02′ Dec) with carriage in "9" position. Enter from lower dials 1.9′ as Δd correction. Clear machine.

Step 10: Set Δt correction factor .26 on keyboard. Multiply by 14 (difference between 18° 46′ and 19° 00′ hour angle). Enter from lower dials 3.6′ as Δt correction. Clear machine.

Step 11: Release carriage latch and place carriage in "8" position. Add 25° 29.9′. Forward turn crank.

Step 12: Subtract 1.9′. Backward turn crank.

Step 13: Add 3.6′. Forward turn crank.

Step 14: Add 1.9′. Forward turn crank. Lower dials show 25° 33.5′ which is entered as H_c. Clear entire machine.

Step 15: To compute value of H_o: add 3.0′ and 1.9′. Forward turn crank. Subtract 2.0′. Backward turn crank. Copy to keyboard 2.9′. Subtract twice. Two backward turns crank.

Step 16: Add 25° 42′. Forward turn crank. Enter lower dials result 25° 39.1′ as H_o.

Step 17: Subtract 25° 33.5′. Backward turn crank. Enter from lower dials, 5.6′ as miles toward and value of a. Clear entire machine.

Step 18: Add 360°. Forward turn crank. Subtract 160.8°. Backward turn crank. Enter result 199.2° as Z_n.

I claim:

In a calculating machine, a denominationally shiftable carriage, totalizer wheels thereon, comprising a first group of four wheels two alternate of which have each twelve teeth numbered 0, 1, 2, 3, 4, 5, 0, 1, 2, 3, 4, 5, and two carry pins and the other two of which have each ten teeth, a second group of three wheels one of which has twelve teeth numbered 0, 1, 2, 3, 4, 5, 0, 1, 2, 3, 4, 5, and the other two of which have each ten teeth, a third group of wheels intermediate the first and second groups and each of which has ten teeth and a fourth group of wheels to the left of said second group and each of which has ten teeth, the ten tooth wheels being each numbered 0, 1, 2, 3, 4, 5, 6, 7, 8, 9, and having each a single carry pin, a unitary keyboard having a first group of four rows of keys ordinally relatable to said first group of wheels, a second group of three rows of keys of said first group with certain additional keys ordinally relatable to said second group of wheels, and a third group of rows of keys ordinally relatable to said fourth group of wheels, the first and third and the second and fourth groups of wheels being respectively ordinally relatable to the first and third and the second and third groups of keys in accomplishing the solution of a single problem, the carriage being positionable to bring certain members of the second and fourth groups of wheels out of ordinal relationship with the first, second and certain of the members of the third groups of keys, the carriage being further positionable to bring certain members of the first and third groups of wheels out of ordinal relationship with all of said keys with exception of the lowest order of the keyboard, means effective to arrest the carriage and lock it against movement in either direction in the last-named carriage positioning, means for releasing the locking means, and means comprising part of the last-named means effective to arrest the carriage at the end of two denominational shifts to the right in both of the two last-named carriage positionings.

EDWIN F. BRITTEN, JR.

REFERENCES CITED

The following references are of record in the file of this patent:

UNITED STATES PATENTS

Number	Name	Date
Re. 13,842	Baldwin	Dec. 8, 1914
852,427	Fox et al.	May 7, 1907
1,053,687	Wheat	Feb. 18, 1913
1,128,409	Cleal	Feb. 16, 1915
1,338,481	Andersson	Apr. 27, 1920
1,468,992	Chase	Sept. 25, 1923
1,590,050	Muller	June 22, 1926
1,756,401	Sundstrand	Apr. 29, 1930
1,865,751	Friden	July 5, 1932
1,877,801	Britten, Jr.	Sept. 20, 1932
2,316,520	Lang	Apr. 13, 1943
2,316,865	Helmond	Apr. 20, 1943

FOREIGN PATENTS

Number	Country	Date
1,286	Great Britain	Jan. 18, 1904
347,059	Germany	Jan. 12, 1922

OTHER REFERENCES

"Instructions and Applications," Monroe Calculating Machine Company, Inc., published June 1943.