June 5, 1962 M. I. SHEPS ETAL 3,037,740

BALANCED TRIGGER MECHANISM FOR AIR TOOL

Filed June 5, 1961 2 Sheets-Sheet 1

FIG. 1

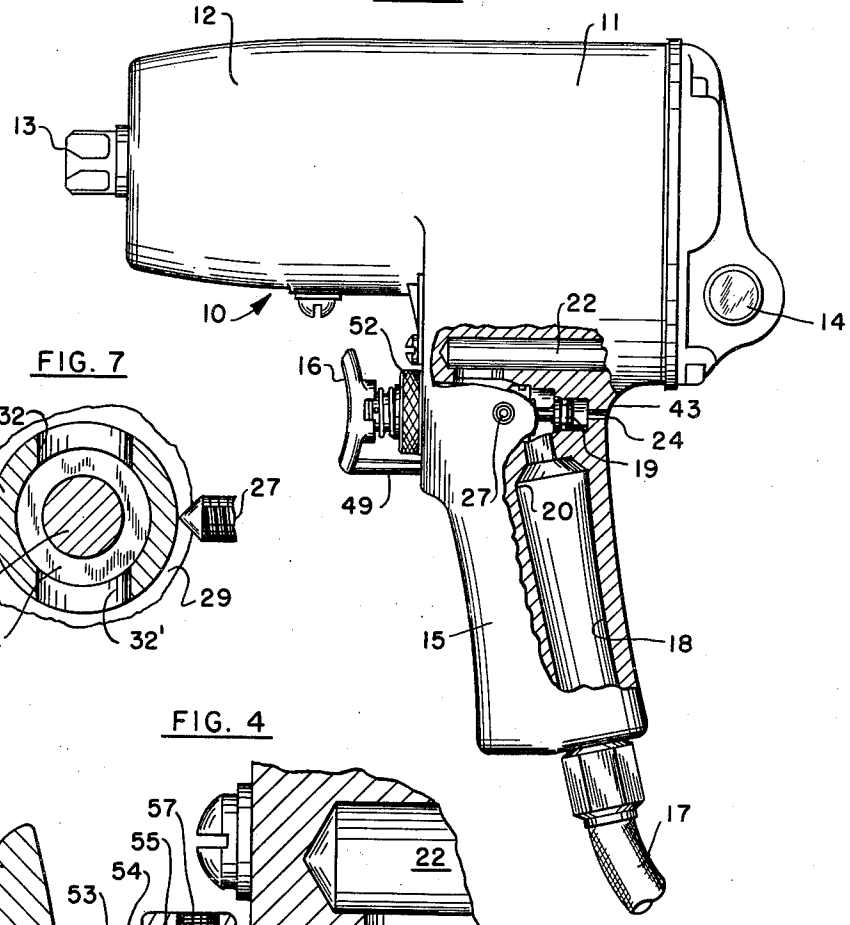

FIG. 7

FIG. 4

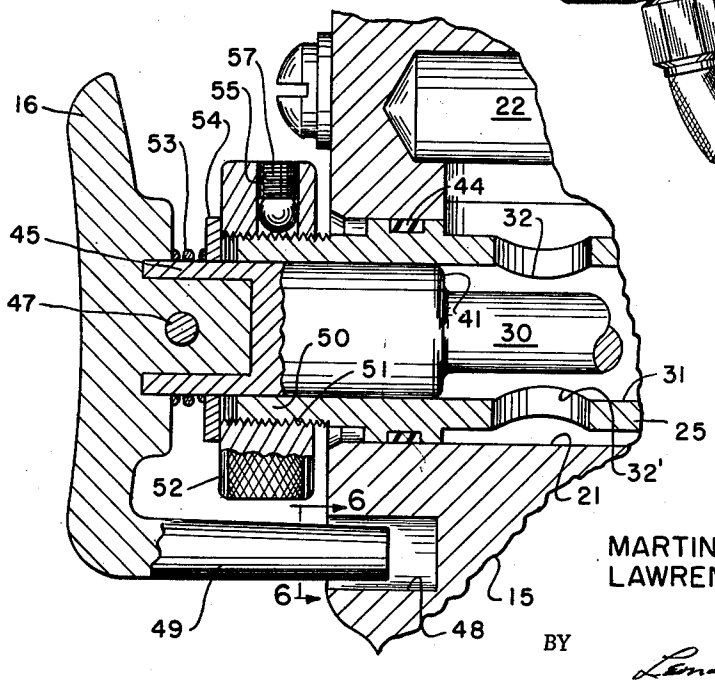

FIG. 6

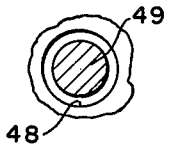

INVENTORS.
MARTIN I. SHEPS
LAWRENCE H. BOWEN, III

BY

Leonard Bloom

ATTORNEY

June 5, 1962 M. I. SHEPS ETAL 3,037,740

BALANCED TRIGGER MECHANISM FOR AIR TOOL

Filed June 5, 1961 2 Sheets-Sheet 2

FIG. 2

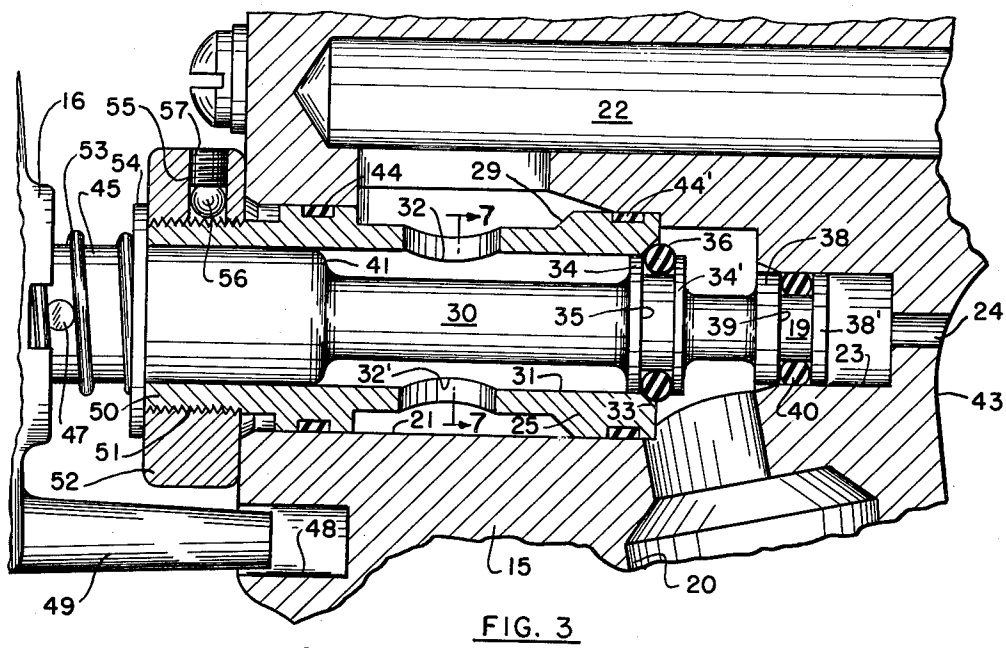

FIG. 3

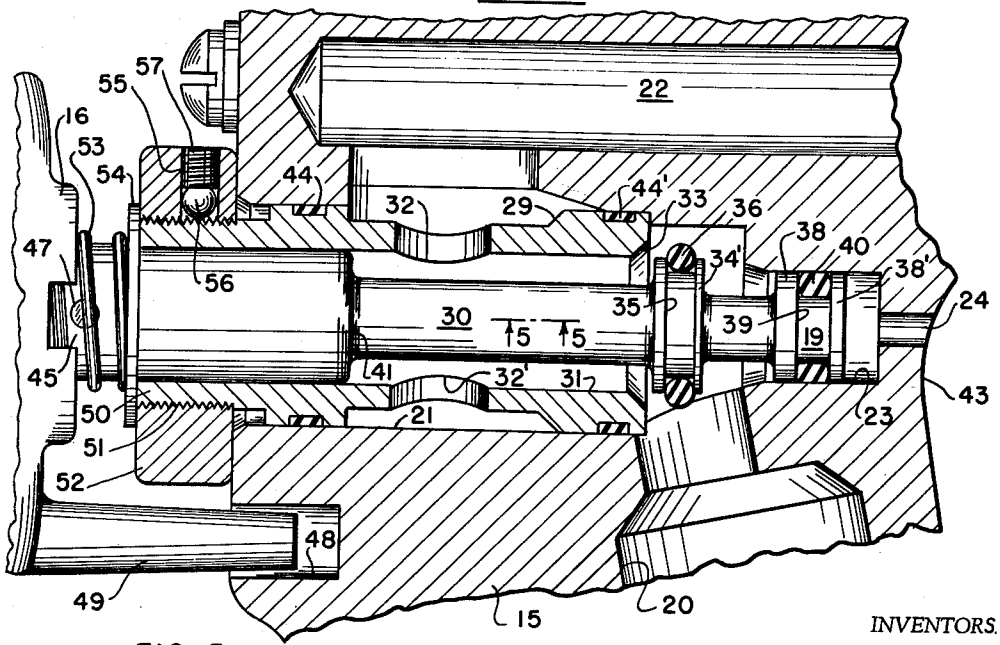

FIG. 5

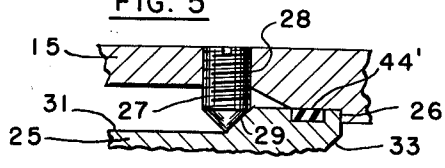

INVENTORS.

MARTIN I. SHEPS
LAWRENCE H. BOWEN, III

BY

Leonard Bloom

ATTORNEY

United States Patent Office

3,037,740

Patented June 5, 1962

3,037,740
BALANCED TRIGGER MECHANISM FOR AIR TOOL

Martin I. Sheps and Lawrence H. Bowen III, Baltimore, Md., assignors to The Black and Decker Manufacturing Company, Towson, Md., a corporation of Maryland

Filed June 5, 1961, Ser. No. 114,773
3 Claims. (Cl. 251—282)

The present invention relates to a balanced trigger mechanism for an air tool, and more particularly, to such a mechanism that will relieve the operator's fatigue and strain in using the tool for sustained periods of time.

It is an object of the present invention to provide, for use with an air tool, a balanced trigger mechanism that is simple and reliable in operation, and that is convenient and economical to manufacture.

It is another object of the present invention to provide, for use with an air tool, a balanced trigger mechanism having a balance piston cylinder and further having an air vent formed in the rearward portion of the pistol-grip housing, whereby the balance piston cylinder communicates with the outside atmosphere.

It is yet another object of the present invention to provide, for use with an air tool, a balanced trigger mechanism having adjusting means to facilitate a "feathering" of the trigger for close and effective operator control over the tool.

These and other objects of the present invention will be apparent from a reading of the following specification, taken in conjunction with the enclosed drawings, in which:

FIGURE 1 is a side elevational view of a typical air-operated tool, with parts broken away and sectioned to show a portion of the balanced trigger mechanism;

FIGURE 2 is an enlarged longitudinal section of the complete balanced trigger mechanism;

FIGURE 3 is a view corresponding to that of FIGURE 2, but showing the balanced trigger mechanism in its operative position;

FIGURE 4 is a partial longitudinal sectional view of the contoured trigger and the adjusting means portion of the trigger mechanism;

FIGURE 5 is a view taken along the lines 5—5 of FIGURE 3;

FIGURE 6 is a view taken along the lines 6—6 of FIGURE 4; and

FIGURE 7 is a view taken along the lines 7—7 of FIGURE 2.

With respect to FIGURE 1, there is illustrated a pneumatic impact wrench 10 with which the present invention may find more particular utility, but it will be appreciated by those skilled in the art that the balanced trigger mechanism of the present invention may be used in a variety of power-operated pneumatic tools. The impact wrench 10 includes a motor housing 11, impact clutch housing 12, driving shank 13, reversing valve 14, a pendant pistol-grip portion 15, a contoured finger-actuated trigger 16, air line 17 leading to a source of compressed air, an air inlet 18 formed within the pistol-grip housing 15, and a balance piston 19.

With reference to FIGURES 2 and 3, the pistol-grip housing 15 is formed with a transition air inlet passage 20, a cylindrical valve chamber 21 communicating with transition passage 20, an air conduit 22 leading to the reversing valve 14, a balance piston cylinder 23, and an

air vent 24, the latter being co-axially aligned with the balance piston cylinder 23 and communicating the rear of the cylinder 23 with the outside atmosphere.

With reference to FIGURES 2 and 3, again, and also with reference to FIGURES 5 and 7, a valve body 25 is disposed within the valve chamber 21 and as shown more clearly in FIGURE 5, valve body 25 is maintained stationary with respect to the chamber 21 of housing 15 by means of a shoulder 26 formed with the valve chamber 21 and a set screw 27 (disposed within a threaded recess 28 in the pistol-grip housing 15) and contacting an internal beveled edge 29 formed on the valve body 25. A valve stem 30 is disposed within a cylindrical bore 31 formed within the stationary valve body 25 and is adapted to be axially movable with respect to the valve body 25. Also, a pair of ports 32 and 32' are contained within the valve body 25 (see FIGURE 7) so that compressed air may be admitted via conduit 22 to the reversing valve 14 and thence to the air motor. Moreover, the valve body 25 is provided at its rear portion with a valve seat 33, and the valve stem 30 is provided with a pair of spaced parallel annular lands 34 and 34' forming an external annular groove 35 therebetween. A resilient annular sealing ring 36 is loosely disposed in the external annular groove 35 and is adapted to normally seat against the valve seat 33 formed in the valve body 25. Moreover, the valve stem 30 is provided with an integral balance piston 19 formed rearwardly thereof and movable in the balance piston cylinder 23. The balance piston 19 is provided with a pair of spaced parallel annular lands 38 and 38' forming therebetween an external annular groove 39, and a second resilient annular sealing ring 40 is loosely fitted within the external annular groove 39 in the balance piston 19 and is adapted to have a sliding contact with the walls of the balance piston cylinder 23.

With reference to FIGURES 4 and 6, the valve stem 30 has a forwardly-protruding portion 45, and a contoured manually-manipulatable trigger 16 is secured to the protruding portion 45 of the valve stem 30 by means of a press-fitted pin 47. Moreover, the housing 15 is provided with a cylindrical recess 48 (substantially parallel to valve chamber 21); and the trigger 16 has an integral guide pin 49 loosely received within the recess 48, thus eliminating any tendency on the part of trigger 16 (as well as valve stem 30) to rotate with respect to the housing 15. Moreover, the valve body 25 has a forwardly-protruding portion 50 having threads 51 formed thereon, and an adjusting nut 52 is carried by the protruding portion 50 of the valve body 25 and is axially movable with respect to the valve body 25 so as to limit the axial rearward travel of the trigger 16 and hence the valve stem 30. Furthermore, resilient means are provided so as to urge the valve stem 30 out of the housing 15, and this means comprises a compression spring 53 disposed between the trigger 16 and a washer 54, the latter being loosely mounted on the valve stem protruding portion 45. As shown in FIGURES 1 and 4, the adjusting nut 52 is provided with a knurled outer surface so as to be manually-manipulatable; and moreover, the adjusting nut 52 is provided with a radial threaded bore 55 such that a nylon or similar pellet 56 (see FIGURE 2) backed by a set screw 57 may be disposed therein. In such a manner, an inadvertent maladjustment or shifting of the adjusting nut 52 is precluded, but the restraining force exerted by pellet 56 and set screw 57 will be insufficient to interfere with an easy

and positive manual manipulation of the adjusting nut 52.

The operation of the present invention is as follows: With the tool 10 connected to a source of compressed air at a pressure in the order of 90 p.s.i., and with the trigger 16 non-actuated by the operator, the arrangement is such as illustrated in FIGURE 2, wherein the valve stem 30 (and ring 36) is seated against the valve seat 33 so as to preclude the admission of "live" air to the motor for the tool 10. Moreover, it will be appreciated that the compressed air leading from the air line 17 into the air inlet 18 and transition air passage 20, will exert a pressure against the valve stem 30 and also against the balance piston 19; and accordingly, there will be a retaining force tending to move the valve stem 30 against the valve seat 33, and also another and opposite force, that is, an unseating force tending to unseat the valve stem 30. The retaining force will be equal to the pressure multiplied by the effective cross-sectional area between the valve stem 30 and the portion of sealing ring 36 that is in sealing engagement with the valve seat 33, while the unseating force will be equal to the pressure multiplied by the effective cross-sectional area between the stem of balance piston 19 and the walls of the balance piston cylinder 23 with which the sealing ring 40 is in intimate sealing engagement. As an approximation, the retaining force will be equal to the pressure multiplied by the effective cross-sectional area of land 34', plus the pressure multiplied by the effective cross-sectional area between land 34' and the tangent point of ring 36 with respect to valve seat 33; and the unseating force will be equal to the pressure multiplied by the effective cross-sectional area of land 38 of the balance piston 19. Since the pressure is identical in each case, the retaining force will be roughly proportional to the effective cross-sectional area of land 34', plus the effective cross-sectional area between land 34' and the tangent point of ring 36, while the unseating force will be roughly proportional to the effective cross-sectional area of land 38. Since land 34' is larger than land 38, and since the spring 53 will exert a slight additional force tending to maintain the valve stem 30 seated with respect to the valve seat 33, it will be appreciated that the net resultant of all forces acting on valve stem 30 will be a force tending to maintain the valve stem 30 seated against the valve seat 33. Hence, the valve is normally in its closed position as shown in FIGURE 2; but it will be appreciated, however, that due to the balance piston 19, the net force that is necessary to unseat the valve and actuate the tool 10 is much less than that which is normally required. Accordingly, it is much easier to operate the tool especially over a sustained period of time, with the result that operator fatigue is largely eliminated.

With reference to FIGURE 2 which shows the valve unseated, so as to admit air into the bore 31 of the valve body 25, and thence via ports 32 and 32' and conduit 22 to the motor, it will be appreciated that in this position the forces acting on the respective lands 34 and 34' tend in effect to balance each other; and accordingly, in this position the force tending to move the valve stem rearwardly constitutes (roughly) the force developed against the land 38 of the balance piston 19, and the force tending to move the valve stem 30 forwardly substantially constitutes the force that is developed on the shoulder portion 41 of the valve stem 30 together with the force exerted by spring 53. It will be appreciated from an examination of the drawings, that the total forward force is still greater than the rearward force, such that the operator need not pull the valve stem 30 out of the housing 15, but need only remove the slight pressure exerted by his finger to allow the valve to immediately close. Moreover, in order to prevent any compression from being developed in the balance piston cylinder 23, the air vent 24 is provided. This air vent 24 is formed co-axially with the balance piston cylinder 23 (and with the valve stem 30) and runs between the rear portion of the balance piston cylinder 23 and the rear external surface 43 of the pistol grip housing 15, so as to communicate the balance piston cylinder 23 wtih the outside atmosphere. Thus the air vent 24 has two purposes: one, to facilitate a pressure differential operating on the balance piston 19, and two, to preclude any build-up of pressure in the balance piston cylinder 23. Moreover as shown in FIGURES 2 and 3, the valve body 25 is provided with O rings 44 and 44' for sealing purposes.

Obviously, many modifications may be made without departing from the basic spirit of the present invention; and therefore, within the scope of the appended claims, the invention may be practiced other than has been specifically described.

We claim:

1. In a pneumatic tool operable from a source of compressed air and including a pendant pistol-grip handle housing having an air inlet chamber formed therein and further including coupling means to couple the chamber to the source of compressed air, a balanced trigger mechanism disposed within the handle housing on the end of the inlet chamber remote from the coupling means, said balanced trigger mechanism comprising means forming a valve chamber substantially transverse to the inlet chamber, a hollow cylindrical valve body fitted within said valve chamber and having a bore and further having a threaded portion extending beyond the handle housing, means to maintain said valve body stationary with respect to said handle housing, said valve body having a plurality of ports formed intermediate the length of said body, means forming an air conduit within the tool, said conduit being in communication with said ports in said valve body, a valve stem slidably disposed within said bore in said valve body and having an enlarged forward portion guided within said body, said forward portion of said valve stem extending beyond said handle housing, a trigger secured on the end of said forward portion of said valve stem, resilient means between said valve body and said trigger, means including an adjusting nut received upon said threaded portion of said valve body for limiting the inward movement of said trigger and said valve stem secured thereto, a guide pin secured to said trigger and projecting rearwardly therefrom, means forming a recess within said handle housing to receive said guide pin therein, thereby preventing said valve stem from rotating with respect to said valve body, said valve body including a rearward portion having a valve seat formed thereon, said valve stem having a pair of spaced parallel annular lands formed thereon rearwardly of said valve seat, a resilient sealing ring loosely fitted on said valve stem intermediate said lands and adapted to seat upon said valve seat in the closed position of said valve, means forming a balance piston cylinder in said handle housing rearwardly of said valve chamber and in coaxial alignment therewith, said valve stem having an integral rearward portion projecting rearwardly of said lands, a balance piston formed on said integral rearward portion of said valve stem, said balance piston being slidably guided within said balance piston cylinder, a resilient sealing ring carried by said balance piston for sealing engagement with said balance piston cylinder, said balance piston cylinder having a smaller diameter than the diameter of said bore in said valve body, and means forming an air vent in said handle housing rearwardly of said balance piston cylinder for communicating said balance piston cylinder to atmosphere.

2. A balanced trigger mechanism according to claim 1, wherein said means to maintain said valve body stationary with respect to the handle housing comprises means forming a shoulder within said valve chamber, said valve body abutting against said shoulder, means forming an annular beveled edge in said valve body forwardly of said shoulder, and a set screw carried by the handle housing transversely of said valve chamber and projecting radially in-

wardly, said screw having a conical tip to engage said annular beveled edge on said valve body.

3. A balanced trigger mechanism according to claim 1, wherein said resilient means comprises a compression spring, and wherein a washer is loosely mounted on said protruding portion of said valve stem forwardly of said adjusting nut, said spring being disposed between said washer and said trigger.

References Cited in the file of this patent

UNITED STATES PATENTS

2,362,608	Allen	Nov. 11, 1944
2,525,626	Stauffer et al.	Oct. 10, 1950
2,564,686	Gray	Aug. 21, 1951
2,564,896	Gustafsson et al.	Aug. 21, 1951
2,585,940	Juilfs	Feb. 19, 1952