Jan. 14, 1941. A. MAXTON 2,228,995

APPARATUS FOR THE MANUFACTURE OF STAPLE FIBER

Filed Nov. 28, 1938

Fig. 1.

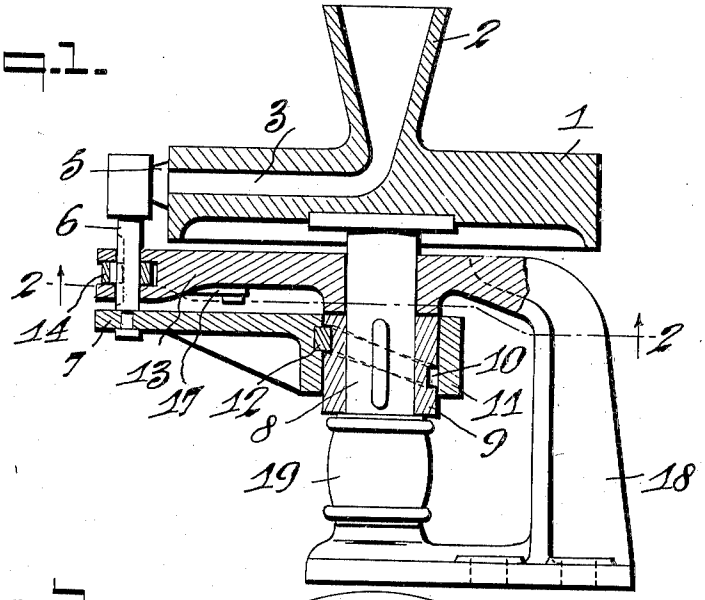

Fig. 2.

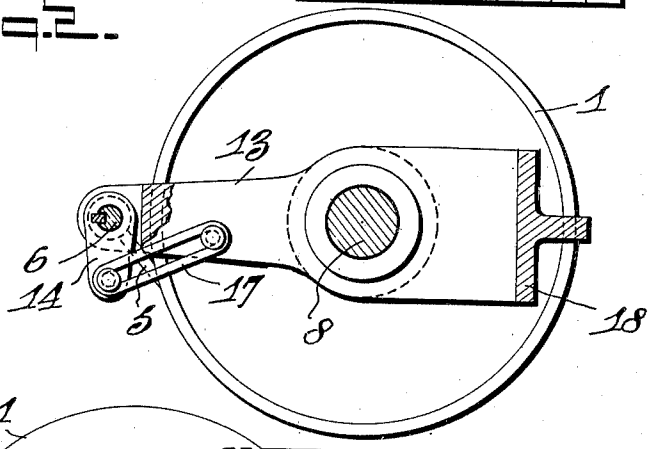

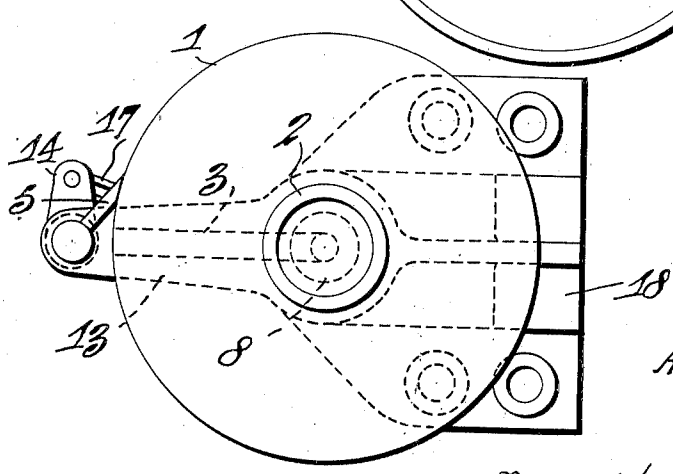

Fig. 3.

Inventor
Alfred Maxton

By Thomas H. Green
Attorney

Patented Jan. 14, 1941 2,228,995

UNITED STATES PATENT OFFICE

2,228,995

APPARATUS FOR THE MANUFACTURE OF STAPLE FIBER

Alfred Maxton, Heinsberg, Rhineland, Germany, assignor to North American Rayon Corporation, New York, N. Y., a corporation of Delaware

Application November 28, 1938, Serial No. 242,646
In Germany November 29, 1937

6 Claims. (Cl. 164—36)

The present invention relates to the manufacture of artificial fibers and more particularly has for its object to devise a novel apparatus for the cutting of staple fiber.

It is already known in the art to cut freshly spun artificial silk bundles in a continuous operation, whereby the thread bundles are passed in axial direction through a guiding channel into a rotating disk. The thread bundle passes out the periphery of the rotating disk where it is cut by means of stationary knives. Depending upon the speed of rotation of the disk and upon the number of cutting knives arranged around the circumference of the said disk it is possible to cut the thread bundles into staples of varying lengths based upon the operating speed.

It has been found that with the ordinary spinning speed of artificial silk or staple fiber of 50, 60 or 70 meters per minute even the use of only one knife will cause difficulties if it is desired to cut particularly long staples, for example, of 12, 15, or 20 centimeters, as is desired for certain types of staple fiber. It has also been found that due to the lower number of revolutions necessitated by the staple length the centrifugal force is so small that the fiber bundle is not carried through the guide channel of the centrifugal machine with sufficient force. Enlargement of the diameter of the centrifugal machine, which would naturally result in a higher centrifugal force, is not desired in most instances, since this change would make the device less suitable for cutting of short staple lengths.

An improvement in the operation of the machine is made possible if the guiding channel is thoroughly polished. As long as the cutting is confined to thread bundles which are moist, i. e. bundles of thread which have not been passed through press rollers, the cutting is comparatively easy because the thread bundles possess a greater weight and consequently develop more centifugal power which is capable of overcoming the friction in the guiding channel. If, however, relatively dry thread bundles are cut, i. e. bundles which have been passed through press rollers difficulties will be encountered even when cutting comparatively short staple lengths.

According to the process and apparatus of this invention it has been found that the cutting operation of such machines can be improved and staples of almost any length may be cut in a reliable manner, if the cutting knife is taken out of cutting position periodically, for example, if the knife is removed from the cutting position after each revolution of the centrifugal machine or if desired after every other revolution. It is of course obvious that it is not necessary that the knife be removed in quite this order but may be so arranged as to be taken out of cutting position at any desired revolution or number of revolutions of the centrifugal machine.

It is therefore one object of the present invention to devise an apparatus whereby the cutting of continuous filaments into short staple lengths is facilitated.

Another object of the present invention is to devise an apparatus whereby it is possible to cut bundles of filaments to any desired length with greater ease than has been possible with machines used heretofore in the art.

These and other objects of the present invention will in part become obvious and will in part be pointed out in the following specification and appended claims when taken in conjunction with the attached drawing, in which:

Fig. 1 is a cross sectional view, parts being shown in elevation of one form of the device which may be used in carrying out the invention,

Fig. 2 is a horizontal cross section on the line 2—2 of Fig. 1 looking in the direction of the arrows, and,

Fig. 3 is a plan view of the device.

In the drawing accompanying this specification 10 indicates a base or frame in which is mounted the usual type of centrifugal wheel 1 secured on a rotatable shaft 8 and driven by means of a pulley 19.

The centrifugal wheel 1 is provided with a feeding funnel 2 into which the thread cable is fed. From the feeding funnel 2 a guiding channel 3 extends radially outwardly to the periphery of the centrifugal disk for the purpose of throwing the fiber bundle into the path of the cutting knife 5, which is in a tangential position with respect to the disk periphery.

In the apparatus comprising this invention this cutting knife 5 is not stationary but is mounted to move up and down at the periphery of the centrifugal wheel and into and out of the path of the fibers thrown therefrom. This periodic removal of the cutting knife from the cutting position may be done after each revolution or plurality of revolutions of the centrifugal wheel as desired.

In order to cause the knife 5 to reciprocate or to move upwardly and downwardly it is mounted on a shaft 6 which in turn is attached to an arm 7 loosely mounted on a bearing collar 9 keyed to the rotatable shaft 8 and rotatable therewith.

A key or follower 12 is fixedly mounted in the bearing collar portion 11 of the lever 7 and this key 12 rides in a continuous cam groove 10 cut in the bearing collar 9 and is reciprocated thereby.

The lever 7 and knife 5 fixed thereon are prevented from rotation with the centrifuge by reason of a stationary arm 13 in one end of which the shaft 6 of the knife 5 is slidably mounted.

During the operation of the machine the knife is continually pressed against the periphery of the centrifugal wheel through the medium of a lever 14 in which the shaft 6 is slidably keyed. This lever 14 is resiliently connected with the stationary arm 13 by any suitable biasing means such as, for example, a belt or spring 17.

In operation, the centrifugal wheel 1 is rotated at the desired speed and a thread bundle is fed into the feeding funnel 2 and thrown outwardly through the guide channel 3 toward the periphery of the wheel 1. As the centrifugal wheel 1 rotates the knife 5 is reciprocated up and down and at the same time held against the periphery of the said wheel 1 so that periodically the knife 5 is in cutting position and then out of cutting position. By the use of such a device and changing the period of movement of the knife into and out of the cutting position the length of the staple fibers may be controlled as desired. It will be appreciated that the pattern of the continuous cylinder cam 10 can be varied to produce whatever cutting frequency is required.

While the invention has been described with reference to the specific structure shown it will be obvious that other devices may be used and various changes in the details of the apparatus may be made without departing from the spirit and scope of the invention in its broader aspects. Hence it is desired to cover all modifications and forms coming within the line or scope of any one or more of the appended claims.

What is claimed is:

1. An apparatus for use in the cutting of fibers comprising a rotatable centrifuge, a guiding channel in said centrifuge, said channel extending radially to the periphery of said centrifuge, a cutting knife operatively positioned with respect to said centrifuge and guiding channel, and means to move said knife periodically into and out of the path of fibers issuing from said guiding channel.

2. An apparatus for use in the cutting of fibers comprising a rotatable centrifuge, a guiding channel in said centrifuge, said channel extending radially to the periphery of said centrifuge, a cutting knife operatively positioned with respect to said centrifuge and guiding channel, means to cause said cutting knife to bear on the peripheral surface of said centrifuge, and means to reciprocate said knife periodically into and out of the path of fibers issuing from said guiding channel as it bears against the periphery of the said centrifuge.

3. An apparatus for use in the cutting of fibers comprising a rotatable centrifuge, a guiding channel in said centrifuge, said channel extending radially to the periphery of said centrifuge, a cutting knife mounted to resiliently bear against the periphery of said centrifuge, means to prevent rotation of said cutting knife with the said centrifuge, and means to reciprocate said cutting knife periodically along the periphery of said centrifuge into and out of operative position with respect to the peripheral end of said guiding channel.

4. An apparatus for use in the cutting of fibers comprising a rotatable centrifuge, a tapered funnel formed centrally of said centrifuge, a guiding channel connecting said funnel with the periphery of said centrifuge, a cutting knife operatively positioned with respect to said centrifuge, means to cause said knife to resiliently bear against the periphery of said centrifuge, and means including a cam to cause said knife to move periodically into and out of the path of fibers issuing from said guiding channel.

5. An apparatus for use in the cutting of fibers comprising a rotatable centrifuge, a guiding channel in said centrifuge extending to the periphery thereof, a knife having its cutting edge arranged transversely of the peripheral surface of the centrifuge and in a tangential position with respect thereto, fixed means adapted to support said knife for reciprocatory movement parallel to the rotational axis of the centrifuge, cam means arranged to rotate with said centrifuge, and means including a follower for said cam means for moving the knife into and out of the path of fibers issuing from said guiding channel in synchronism with rotation of the centrifuge.

6. An apparatus for use in the cutting of fibers comprising a rotatable centrifuge, a guiding channel in said centrifuge extending to the periphery thereof, a knife having its cutting edge arranged transversely of the peripheral surface of the centrifuge, a resiliently biased lever connected with said knife for urging it into a tangential position with respect to the periphery of said centrifuge, fixed means adapted to support said knife for reciprocating movement parallel to the rotational axis of the centrifuge, cam means arranged to rotate with said centrifuge, and means including a follower for said cam means for moving the knife into and out of the path of fibers issuing from said guiding channel in synchronism with rotation of the centrifuge.

ALFRED MAXTON.