No. 859,364. PATENTED JULY 9, 1907.

D. S. CHAMBERS, M. G. FROOME, J. C. HUFF & C. A. McCRARY.

BEET LOADER.

APPLICATION FILED APR. 23, 1906.

2 SHEETS—SHEET 1.

Fig. 1.

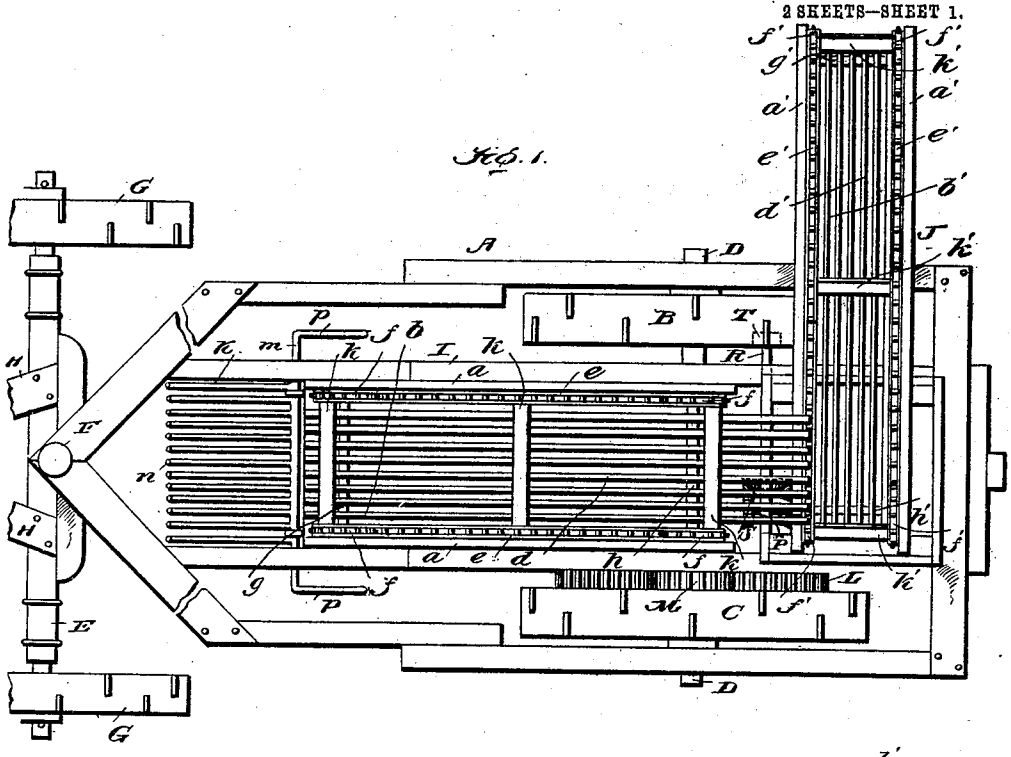

Fig. 2.

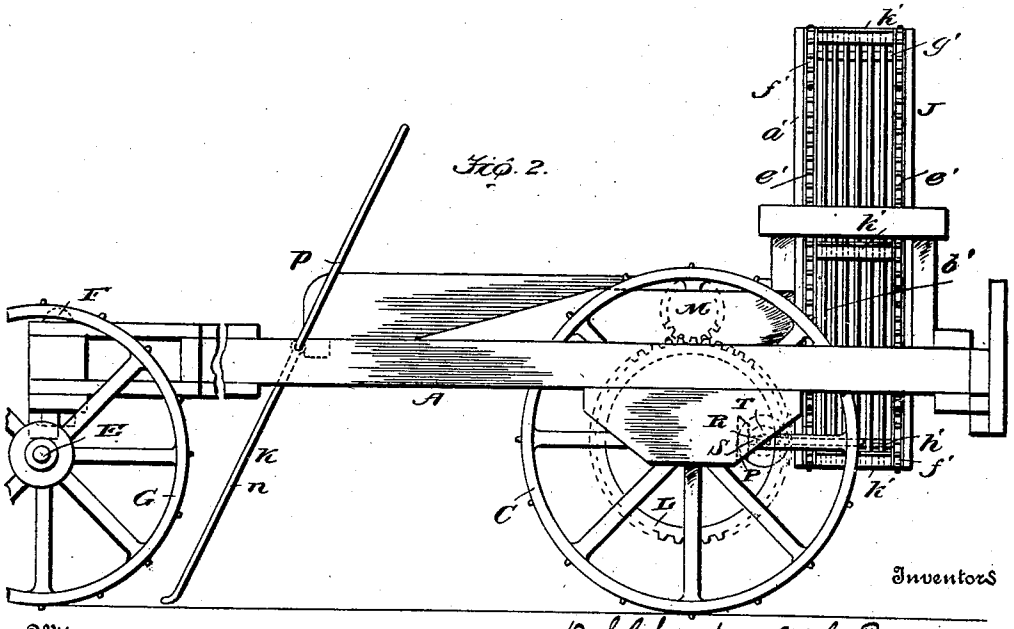

Witnesses

Wm. C. Dashiell.

W. C. Dealy

Inventors

D. S. Chambers, M. G. Froome,

By J. C. Huff & C. A. McCrary

James J. Sheehy

Attorney

THE NORRIS PETERS CO., WASHINGTON, D. C.

No. 859,364. PATENTED JULY 9, 1907.

D. S. CHAMBERS, M. G. FROOME, J. C. HUFF & C. A. McCRARY.

BEET LOADER.

APPLICATION FILED APR. 23, 1906.

2 SHEETS—SHEET 2.

Fig. 3.

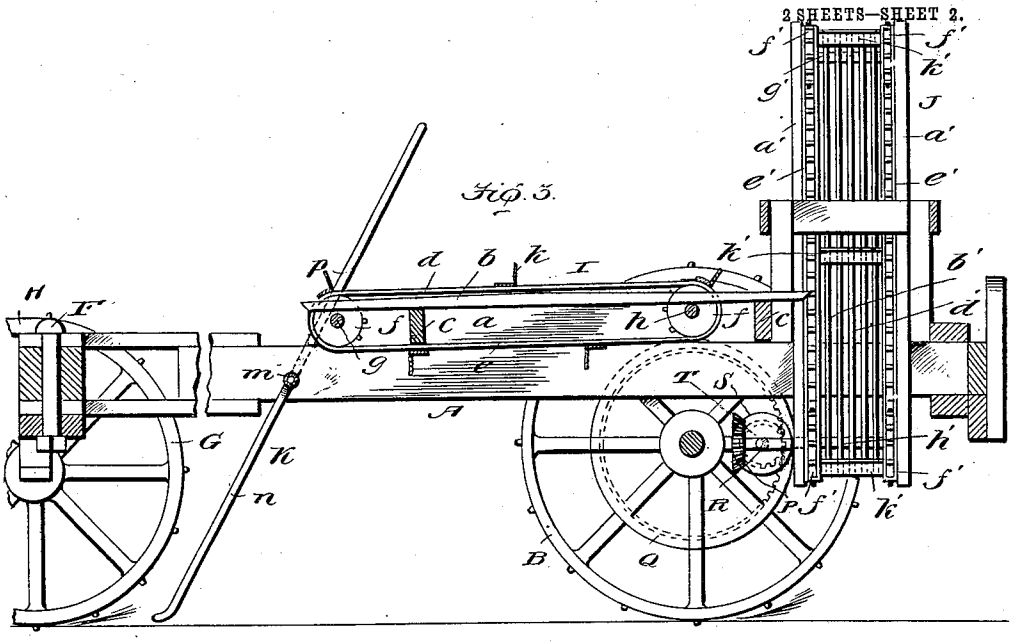

Fig. 4.

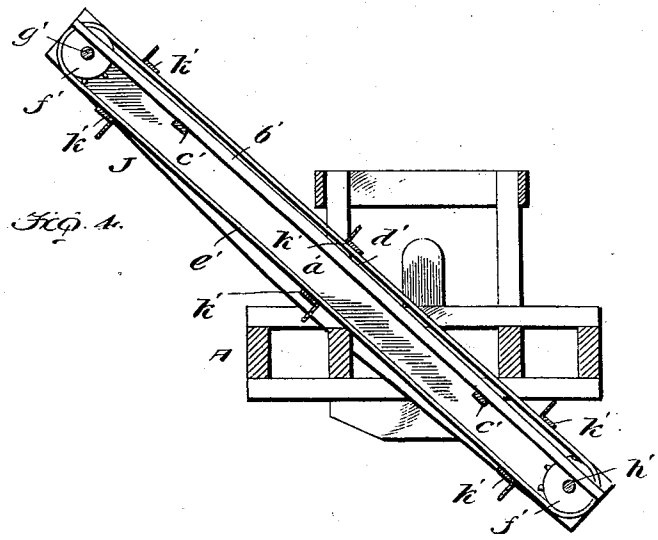

Witnesses

Wm. C. Dashiell.

N. C. Healy.

Inventors

D. S. Chambers, M. G. Froome,

J. C. Huff + C. A. McCrary

By James J. Healy

Attorney.

THE NORRIS PETERS CO., WASHINGTON, D. C.

UNITED STATES PATENT OFFICE.

DAVID S. CHAMBERS, MOSCOE G FROOME, JACOB C. HUFF, AND CHARLES A. McCRARY, OF LA GRANDE, OREGON.

BEET-LOADER.

No. 859,364. Specification of Letters Patent. Patented July 9, 1907.

Application filed April 23, 1906. Serial No. 313,288.

To all whom it may concern:

Be it known that we, DAVID S. CHAMBERS, MOSCOE G. FROOME, JACOB C. HUFF, and CHARLES A. McCRARY, citizens of the United States, residing at La Grande, in the county of Union and State of Oregon, have invented new and useful Improvements in Beet-Loaders, of which the following is a specification.

Our invention pertains to beet loaders; and it has for its general object to provide a simple and inexpensive machine adapted to be operated by a single person, and constructed with a view of taking sugar beets and the like from the ground, freeing the beets of dirt to a large extent, and conveying the beets to and discharging the same into a wagon drawn along at one side of the machine.

The invention will be fully understood from the following description and claims when the same are read in connection with the accompanying drawings, forming part of this specification, in which:

Figure 1 is a top plan view of the sugar beet loader constituting the present and preferred embodiment of our invention. Fig. 2 is a side elevation of the machine. Fig. 3 is a longitudinal central section illustrating the conveyer for moving the beets rearwardly, and also illustrating the fork through the medium of which the beets are raised from the ground, and the arrangement of the said conveyer for moving the beets rearwardly, relative to the elevator for moving the beets upwardly and laterally and discharging the same into a wagon drawn along at the right hand side of the machine. Fig. 4 is a transverse section illustrating the construction of the elevator.

Similar letters designate corresponding parts in all of the views of the drawings, referring to which:

A is the main frame of our novel machine. The said main frame is preferably of the construction shown, though it may be of any construction compatible with the purposes of our invention without involving a departure from the scope thereof.

B and C are the rear wheels of the machine. These wheels B and C are mounted on separate axles D, and in addition to supporting the rear portion of the main frame A, the wheel C is designed to drive the endless apron of the longitudinal conveyer while the wheel B is designed to drive the endless apron of the lateral elevator, as will be hereinafter described in detail.

E is a front axle connected through the medium of the usual king bolt F to the forward portion of the main frame A. The said front axle E is designed to be swung in opposite directions on the king bolt in the manner common to the front axles of carriages and wagons, and is equipped with wheels G and the usual pole or tongue H; the latter being designed to permit of draft animals being hitched to the machine so as to draw the same over the beet field. The driver of the machine stands during the use thereof on the front part of the frame A, and hence it will be apparent that he is enabled to control the draft animals and guide the machine and is also enabled to operate the fork presently described and in that way control the transfer of the beets from the ground to the before-mentioned wagon that is moved along at the right hand side of the machine.

I is the longitudinal conveyer of our machine.

J is the lateral elevator, and K is the beet-raising fork.

As best shown in Fig. 3 the conveyer I as a whole is inclined downwardly and forwardly to a slight extent; and it is made up of side bars *a*, longitudinal ribs *b* fixed with respect to the side bars, preferably through the medium of fixed transverse bars *c*, and arranged a slight distance apart so as to permit dirt to drop between them, and having upper edges *d* which are slightly convex in the direction of their length for a purpose presently described, and an endless apron made up of sprocket chains *e* mounted on sprocket wheels *f* carried by transverse shafts *g* and *h* at opposite ends of the conveyer, and crosswise slides *k* connected to the sprocket chains and movable over the upper edges of the ribs *b* and having for their office to move beets rearwardly on the said ribs. By virtue of the upper edges *d* of the ribs *b* being slightly convex in the direction of their length, the said edges are higher at the middle of the conveyer I than at the ends thereof, and from this it follows that the slides *k* will fit close on the ribs during the rearward movements of the slides, and will be effectually prevented from jumping or passing idly over the beets on the ribs. During the rearward passage of the beets on the conveyer I and before the slides or followers *k*, a considerable portion of the dirt taken up with the beets will be knocked therefrom, and will fall between the ribs *b* to the ground. The endless apron of the conveyer I is driven by the rear wheel C through the medium of the driving connection illustrated, which driving connection comprises an exteriorly toothed gear L fixed to the wheel C, and a pinion M fixed on the conveyer shaft *h* and intermeshed with the said gear L.

The lateral elevator J is, as best shown in Fig. 4, made up of side bars *a'*, longitudinal ribs *b'* fixed to cross-bars *c'* which in turn are fixed to the side bars *a'*; the said ribs *b'* having their upper edges slightly convex in the direction of the length thereof, as indicated by *d'*, for the purpose hereinbefore described with reference to the ribs *b* of the conveyer I, and an endless apron comprising sprocket chains *e'* mounted on sprocket wheels *f'* carried by transverse shafts *g'* and *h'*

at opposite ends of the elevator, and crosswise slides k' connected to the sprocket chains so as to move upwardly over the upper edges of the ribs b' and having for their function to raise the beets on the said ribs which are inclined to the extent illustrated. The apron of the elevator J is driven by the traveling wheel B of the machine through the medium of the driving connection illustrated which comprises a miter gear P fixed on the shaft h', an interiorly toothed gear Q fixed to the wheel B, and a transverse shaft R journaled in suitable bearings in the main frame and having a miter gear S at one end intermeshed with the miter gear P, and a pinion T at its opposite end intermeshed with the gear Q.

It will be apparent from the foregoing that during the progress of the machine, the slides k of the conveyer I will be moved rearwardly in succession over the ribs b thereof, while the slides k' of the elevator J will be moved upwardly and laterally in succession over the ribs b' thereof, and this without care or attention on the part of the driver of the machine. It will also be apparent that the conveyer I will discharge the beets on the apron of the elevator J, and that one of the slides k' of the elevator will always be in a position to support any beets that may be deposited on the lower portion of the elevator.

The fork K comprises a transverse shaft m journaled in the forward portions of the side bars a comprised in the conveyer I, tines n fixed to and extending forwardly from the shaft m, and one or more lever arms p fixed to the shaft m and disposed inside of the main frame A. By virtue of the fork having a lever arm p arranged within convenient reach of the driver of the machine, it will be seen that the driver is enabled with one hand to rock the fork K upwardly, at intervals during the progress of the machine, and in that way cause the beets that are collected on the fork to roll down the tines on to one of the slides k of the conveyer I which is always in position to receive beets from the fork. As indicated in the foregoing the shaft of the fork may have but one lever arm p without involving departure from the scope of our invention. We prefer, however, to provide the shaft with two lever arms p as illustrated, this in order to permit of an attendant assisting the driver of the machine in manipulating the fork K when the crop of beets is a plentiful one.

In the practical use of the machine, the machine is driven over the field with the tines of the fork K resting at their forward ends on or adjacent to the ground, and hence it will be apparent that the beets encountered by the fork will be taken up on the same. At intervals during the progress of the machine the driver swings the fork K upwardly, and in that way effects the transfer of the beets to the conveyer I. The latter carries the beets rearwardly and discharges the same on the elevator J, and the said elevator carries the beets upward and laterally and discharges the same into the body of a wagon that is drawn along at the right hand side of the machine. Incident to the rearward passage of the beets on the conveyer I a considerable portion of the dirt is separated from the beets and permitted to drop between the ribs and to the ground. This is also true of the passage of the beets up the elevator J and consequently when the beets are received in the wagon they are in a clean condition.

It will be gathered from the foregoing that our novel sugar beet loader may be handled with the same facility as a wagon; it being merely necessary for the driver in turning the machine at the end of a field to raise the points of the fork tines from the ground.

It will also be gathered that the machine is simple and inexpensive in construction, is light of draft, and includes no delicate parts such as are likely to get out of order after a short period of use.

We have entered into a detailed description of the construction and relative arrangement of the parts included in the present and preferred embodiment of our invention in order to impart a definite understanding of the said embodiment. We do not desire, however, to be understood as confining ourselves to the said specific construction and relative arrangement of parts as such changes or modifications may be made in practice as fairly fall within the scope of our claimed invention.

Having described our invention, what we claim and desire to secure by Letters-Patent, is:

In a beet loader, the combination of a wheel-supported main frame, a longitudinal conveyer arranged in the main frame and having an endless apron and also having side bars fixed with respect to said frame, and a vertically swinging, beet raising device comprising a transverse rock-shaft journaled in the side bars of the conveyer at a point slightly in front of the apron thereof and terminating at its ends in angularly-disposed arms movable vertically between the side bars of the conveyer and the side bars of the main frame, and tines fixed to and extending downward and forward from said rock-shaft.

In testimony whereof we have hereunto set our hands in presence of two subscribing witnesses.

DAVID S. CHAMBERS.
MOSCOE G. FROOME.
JACOB C. HUFF.
CHARLES A. McCRARY.

Witnesses:
JOHN E. HOUGH,
MABEL A. HOUGH.