PCT

WORLD INTELLECTUAL PROPERTY ORGANIZATION
International Bureau

INTERNATIONAL APPLICATION PUBLISHED UNDER THE PATENT COOPERATION TREATY (PCT)

(51) International Patent Classification 6 : E04F 19/06

A1

(11) International Publication Number: WO 95/14835

(43) International Publication Date: 1 June 1995 (01.06.95)

(21) International Application Number: PCT/GB94/02592

(22) International Filing Date: 25 November 1994 (25.11.94)

(30) Priority Data:
9324313.7 26 November 1993 (26.11.93) GB

(71)(72) Applicant and Inventor: BRUCE, Aidan, Simon [GB/GB]; 60 Larun Beat, Yarm, Cleveland TS2 1LU (GB).

(74) Agent: BARKER, BRETTELL & DUNCAN; 138 Hagley Road, Edgbaston, Birmingham B16 9PW (GB).

(81) Designated States: AU, PL, US, European patent (AT, BE, CH, DE, DK, ES, FR, GB, GR, IE, IT, LU, MC, NL, PT, SE).

Published
With international search report.

(54) Title: TRIM STRIP

(57) Abstract

A trim strip adapted for use with at least two different thicknesses of tiles or other surface coverings has a first base part (5) joined to a stem part (3) to an intermediate portion of which a second base part (6) is joined spaced from the first base part. Adjacent to the second base part (6) the stem part is adapted, e.g. by a line of weakening formed by a V-groove (8), to be severed for removal of the first base part. Including the first base part the trim strip can be used with tiles or coverings of one thickness, and when the first base part is removed the strip can be used with thinner tiles or coverings. There may be one or more further base parts at which the stem part is severable. In a listello version the trim strip has two laterally spaced stem parts each having first and second base parts.

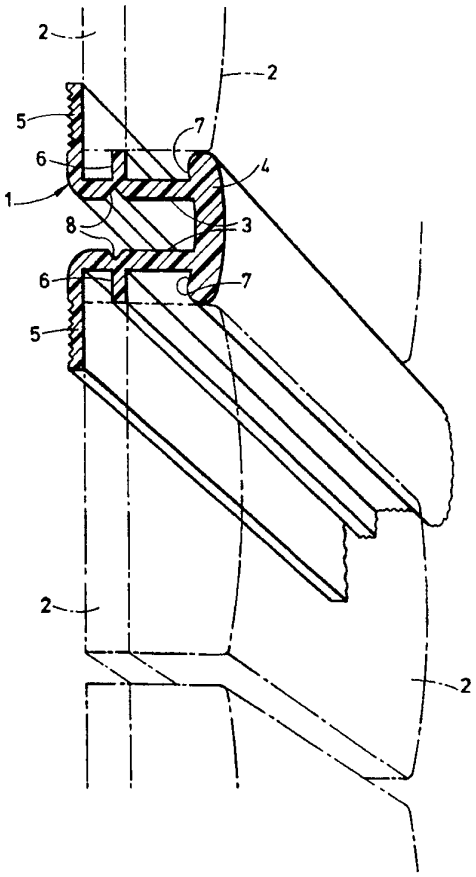

FOR THE PURPOSES OF INFORMATION ONLY

Codes used to identify States party to the PCT on the front pages of pamphlets publishing international applications under the PCT.

AT	Austria	**GB**	United Kingdom	**MR**	Mauritania
AU	Australia	**GE**	Georgia	**MW**	Malawi
BB	Barbados	**GN**	Guinea	**NE**	Niger
BE	Belgium	**GR**	Greece	**NL**	Netherlands
BF	Burkina Faso	**HU**	Hungary	**NO**	Norway
BG	Bulgaria	**IE**	Ireland	**NZ**	New Zealand
BJ	Benin	**IT**	Italy	**PL**	Poland
BR	Brazil	**JP**	Japan	**PT**	Portugal
BY	Belarus	**KE**	Kenya	**RO**	Romania
CA	Canada	**KG**	Kyrgystan	**RU**	Russian Federation
CF	Central African Republic	**KP**	Democratic People's Republic of Korea	**SD**	Sudan
CG	Congo			**SE**	Sweden
CH	Switzerland	**KR**	Republic of Korea	**SI**	Slovenia
CI	Côte d'Ivoire	**KZ**	Kazakhstan	**SK**	Slovakia
CM	Cameroon	**LI**	Liechtenstein	**SN**	Senegal
CN	China	**LK**	Sri Lanka	**TD**	Chad
CS	Czechoslovakia	**LU**	Luxembourg	**TG**	Togo
CZ	Czech Republic	**LV**	Latvia	**TJ**	Tajikistan
DE	Germany	**MC**	Monaco	**TT**	Trinidad and Tobago
DK	Denmark	**MD**	Republic of Moldova	**UA**	Ukraine
ES	Spain	**MG**	Madagascar	**US**	United States of America
FI	Finland	**ML**	Mali	**UZ**	Uzbekistan
FR	France	**MN**	Mongolia	**VN**	Viet Nam
GA	Gabon				

TRIM STRIP

This invention relates to a trim strip which may be used as an edging for tiles and other coverings for walls, floors and other surfaces.

A trim strip of this kind usually comprises a base part by which it is able to be fixed to the surface on which the tiles or other coverings with which the trim strip is to be used are mounted, and a stem part which projects from the base part to extend alongside exposed edges of the mounted tiles or other coverings. The stem part may have a head portion, or carry a head part, which is intended to be presented adjacent to or to extend over front surfaces of the tiles or other coverings adjacent to the exposed edges.

Tiles and other coverings with which such trim strips may be used may be supplied in more than one thickness. It has been the practice to provide trim strips having stem parts of different heights to suit the different thicknesses of the tiles or other coverings.

The present invention aims to provide a trim strip which may be used with tiles and other coverings of more than one thickness.

The present invention consists in a trim strip for use with tiles and other coverings comprising a base part able to be fixed to a surface on which the tiles or other coverings are mounted and a stem part which projects from the base part to extend alongside exposed edges of the tiles or other coverings, characterised in that first and second base parts are provided, the stem part being joined to the first base part and the second

base part being joined to an intermediate portion of the stem part and spaced from the first base part, and the stem part being adapted to be severed adjacent to the second base part for removal of the first base part and the intervening portion of the stem part between the two base parts.

When the first base part is included the trim strip may be used with tiles or other coverings of one thickness, and when the stem part is severed to remove the first base part and intervening portion of the stem part the trim strip may be used with tiles or other coverings of a lesser thickness. Thus the trim strip is adaptable for tiles or other coverings of different thicknesses.

A line of weakness, for example as a V-groove, may be formed in the stem part at which it may be readily severed. The severing may be arranged to be done by bending the stem part about the line of weakness.

There may be one or more further base parts on the stem part, spaced from the second base part, and from each other if there are two or more, and the stem part may be arranged to be severable adjacent to the or each further base part as well to enable the trim strip to be adapted to suit tiles or coverings of a range of thicknesses.

The stem part may have a head portion, or carry a head part, to be presented adjacent to, or to extend over, front surfaces of the tiles or coverings with which the trim strip is used.

Preferably the trim strip is made of a plastics material, conveniently as an extrusion.

The trim strip may take the form of a listello for use between tiles or other coverings on a surface. In such a form the first base part may have oppositely extending portions, or there may be two oppositely directed first base parts, to be fixed behind tiles or other coverings at either side of the trim strip, and there may be two oppositely-directed second base parts, and further base parts if desired, on the stem part to which the stem part may be shortened if required for tiles or other coverings of lesser thicknesses at either side of the trim strip. In another form, as a listello, the trim strip may have two laterally spaced stem parts each with its own base parts and each severable to be adapted for tiles or other coverings of different thicknesses.

An embodiment of the invention will now be described by way of example only with reference to the accompanying drawing which is a perspective view of a trim strip in accordance with the present invention.

In this embodiment the trim strip, indicated generally at 1, is in the form of a listello to be used between rows of ceramic wall tiles 2, as a decorative break between them. The trim strip is a plastics extrusion, for example, of polyvinyl chloride. It is of a generally U-section comprising two parallel limbs which form stem parts 3 of the trim strip, a web portion joined to and overhanging the stem parts which forms a head part 4 of the trim strip, and at the opposite ends of the stem parts from the head part oppositely-directed flanges which form first base parts 5 of the trim strip. The first base parts 5 extend at right angles to the stem parts 3 and are aligned. Formed on one side of each stem part 3, spaced from and parallel to the respective first base

part 5, is a second base part 6 which projects in the same direction as the respective first base part but for a shorter distance, the distance being similar to the adjacent overhang 7 of the head part 4. A V-shaped groove 8 is formed in each stem part in the opposite side surface from the second base part 6, extending parallel to the two base parts. The inner end of the V-shaped groove 8 in each stem part is directly opposite the surface of the second base part 6 which is nearest to the associated first base part.

The V-shaped grooves 8 form lines of weakness along the stem parts 3 at which the stem parts may be severed to remove the first base parts and the intervening portions of the stem parts between the first and second base parts of the trim strip. The severing can be done readily by hand by bending the stem parts 3 about the grooves 8.

The trim strip described may be used with tiles 3 of two different thicknesses, typically the standard 9mm and 6mm tile thicknesses. For the thicker tiles the trim strip is used in its complete form, the first base parts 5 being secured to the mounting surface behind the tiles which can be laid over the base parts and grouted into the trim strip. For the thinner tiles the stem parts are severed at the grooves 8, the second base parts then being secured to the mounting surface. In either case the overhangs 7 of the head part 4 of the trim strip abut against the edges of the tiles adjacent to their front surfaces.

It will be appreciated that the adaptable trim strip now provided avoids the need for different trim strips to be manufactured and stocked for tiles, or other coverings, of different thicknesses, and that the

trim strip can be readily adjusted for different tile thicknesses.

Claims

1. A trim strip for use with tiles and other coverings, comprising a base part (5) able to be fixed to a surface on which the tiles or other coverings are mounted and a stem part (3) which projects from the base part to extend alongside exposed edges of the tiles or other coverings, characterised in that first and second base parts (5;6) are provided, the stem part (3) being joined to the first base part (5) and the second base part (6) being joined to an intermediate portion of the stem part and spaced from the first base part, and the stem part (3) being adapted to be severed adjacent to the second base part (6) for removal of the first base part (5) and the intervening portion of the stem part between the two base parts.

2. A trim strip according to claim 1 characterised in that the stem part (3) has a line of weakness (8) formed in it adjacent to the second base part (6) at which the stem part is able to be severed.

3. A trim strip according to claim 2 characterised in that the line of weakness (8) is formed by a V-groove in the stem part (3).

4. A trim strip according to claim 2 or claim 3 characterised in that the line of weakness (8) enables severing of the stem part (3) by bending the stem part about the line of weakness.

5. A trim strip according to any preceding claim characterised by being made as an extrusion of a plastics material.

6. A trim strip according to any preceding claim characterised in that the stem part (3) has a head (4) to be presented adjacent to, or to extend over, front surfaces of tiles or other coverings with which the trim strip is to be used.

7. A trim strip according to any preceding claim characterised in that it is in the form of a listello for use between tiles or other coverings on a surface, the first and second base parts (5;6) each having oppositely extending portions adapted to be fixed behind tiles or coverings at either side of the stem part.

8. A trim strip according to any of claims 1 to 6 characterised in that it is in the form of a listello for use between tiles or other coverings on a surface, there being two of the first base parts (5) joined to the stem part (3) and oppositely directed from the stem part so as to be able to be fixed behind tiles or other coverings at either side of the stem part, and two of the second base parts (6) joined to the intermediate portion of the stem part and also oppositely directed from the stem part.

9. A trim strip according to claim 6 characterised in that it is in the form of a listello for use between tiles or other coverings on a surface, having two of the stem parts (3), laterally spaced apart and joined by a common head (4), and two each of the first and second base parts (5;6), one first base part (5) and one second base part (6) to each of the stem parts (3), extending from the stem parts in directions away from one another, each of the stem parts being adapted to be severed adjacent to its respective second base part.

10. A trim strip according to any preceding claim characterised in that at least one further base part is joined to the or each stem part (3) spaced from the, or the respective, second base part (6), and the, or the respective, stem part is adapted to be severed adjacent to the further base part.

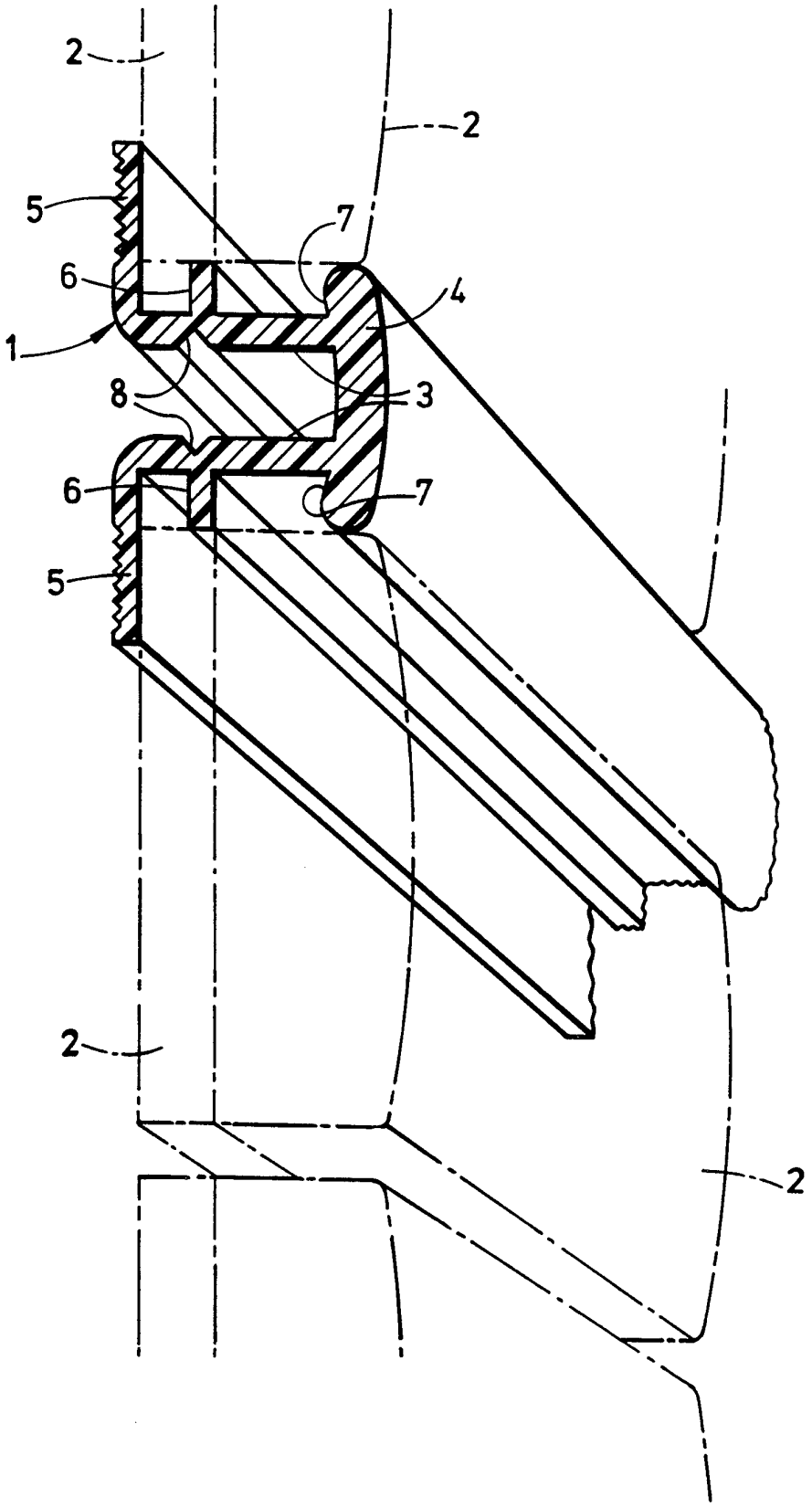
2
2
5
7
6
4
1
8
3
6
7
5
2
2

INTERNATIONAL SEARCH REPORT

Inter nal Application No
PCT/GB 94/02592

A. CLASSIFICATION OF SUBJECT MATTER
IPC 6 E04F19/06

According to International Patent Classification (IPC) or to both national classification and IPC

B. FIELDS SEARCHED

Minimum documentation searched (classification system followed by classification symbols)
IPC 6 E04F E01C E04B

Documentation searched other than minimum documentation to the extent that such documents are included in the fields searched

Electronic data base consulted during the international search (name of data base and, where practical, search terms used)

C. DOCUMENTS CONSIDERED TO BE RELEVANT

Category °	Citation of document, with indication, where appropriate, of the relevant passages	Relevant to claim No.
A	GB,A,2 232 176 (BRUCE) 5 December 1990 see page 4, line 21 - page 6, line 33 see page 7, line 35 - page 9, line 28 see page 12, line 9 - page 14, line 3; figures 3,4,6,7 ---	1,5-8
A	EP,A,0 394 036 (BRUCE) 24 October 1990 see column 4, line 54 - column 6, line 43 see column 7, line 40 - column 8, line 34; figures 1,2,5-7 ---	1,5,6
A	GB,A,2 217 747 (ADVANCE CERAMIC EQUIPMENT LTD) 1 November 1989 see page 4, line 12 - page 5, line 19 see page 6, line 11 - page 8, line 9; figures 1,2,4 --- -/--	1,7,8

[X] Further documents are listed in the continuation of box C.

[X] Patent family members are listed in annex.

° Special categories of cited documents :

"A" document defining the general state of the art which is not considered to be of particular relevance

"E" earlier document but published on or after the international filing date

"L" document which may throw doubts on priority claim(s) or which is cited to establish the publication date of another citation or other special reason (as specified)

"O" document referring to an oral disclosure, use, exhibition or other means

"P" document published prior to the international filing date but later than the priority date claimed

"T" later document published after the international filing date or priority date and not in conflict with the application but cited to understand the principle or theory underlying the invention

"X" document of particular relevance; the claimed invention cannot be considered novel or cannot be considered to involve an inventive step when the document is taken alone

"Y" document of particular relevance; the claimed invention cannot be considered to involve an inventive step when the document is combined with one or more other such documents, such combination being obvious to a person skilled in the art.

"&" document member of the same patent family

1

Date of the actual completion of the international search	Date of mailing of the international search report
17 February 1995	06. 03. 95
Name and mailing address of the ISA European Patent Office, P.B. 5818 Patentlaan 2 NL - 2280 HV Rijswijk Tel. (+31-70) 340-2040, Tx. 31 651 epo nl, Fax (+31-70) 340-3016	Authorized officer Ayiter, J

Form PCT/ISA/210 (second sheet) (July 1992)

INTERNATIONAL SEARCH REPORT

Inter nal Application No
PCT/GB 94/02592

C.(Continuation) DOCUMENTS CONSIDERED TO BE RELEVANT

Category °	Citation of document, with indication, where appropriate, of the relevant passages	Relevant to claim No.
A	DE,B,12 80 527 (WEILL & REINEKE) 17 October 1968 see column 3, line 45 - column 4, line 21; figures 1,2 -----	1,6

1

Form PCT/ISA/210 (continuation of second sheet) (July 1992)

INTERNATIONAL SEARCH REPORT

Information on patent family members

Inter nal Application No
PCT/GB 94/02592

Patent document cited in search report	Publication date	Patent family member(s)		Publication date
GB-A-2232176	05-12-90	NONE		
EP-A-0394036	24-10-90	AU-B-	621728	19-03-92
		AU-A-	5365090	25-10-90
		GB-A,B	2231067	07-11-90
GB-A-2217747	01-11-89	NONE		
DE-B-1280527		NONE		