(12) INTERNATIONAL APPLICATION PUBLISHED UNDER THE PATENT COOPERATION TREATY (PCT)

(19) **World Intellectual Property Organization**
International Bureau

(43) **International Publication Date**
08 May 2025 (08.05.2025)

WIPO | PCT

(10) **International Publication Number**
WO 2025/096286 A1

WO 2025/096286 A1

(51) **International Patent Classification:**
F16F 15/03 (2006.01) ***G12B 3/08*** (2006.01)
B65D 81/02 (2006.01) ***H02K 7/02*** (2006.01)
F16F 7/00 (2006.01) ***H02K 7/16*** (2006.01)
F16F 7/06 (2006.01)

(21) **International Application Number:**
PCT/US2024/052872

(22) **International Filing Date:**
24 October 2024 (24.10.2024)

(25) **Filing Language:** English

(26) **Publication Language:** English

(30) **Priority Data:**
63/547,303 03 November 2023 (03.11.2023) US
63/607,077 06 December 2023 (06.12.2023) US
63/611,627 18 December 2023 (18.12.2023) US

(71) **Applicant: PHOS GLOBAL ENERGY SOLUTIONS, INC.** [US/US]; 3201 North Federal Highway, Suite 301, Fort Lauderdale, Florida 33306 (US).

(72) **Inventors: RUDOLPH, Eugene Earle**; 51 Davis Avenue, Port Jefferson Station, New York 11776 (US). **BICA, Victor**; 1 Reinhart Court, St. James, New York 11780 (US).

(74) **Agent: WEBER, Nathan**; WEBER ROSSELLI & CANNON LLP, 143 Broadway - Suite 108, Hawthorne, New York 10532 (US).

(81) **Designated States** *(unless otherwise indicated, for every kind of national protection available)*: AE, AG, AL, AM, AO, AT, AU, AZ, BA, BB, BG, BH, BN, BR, BW, BY, BZ, CA, CH, CL, CN, CO, CR, CU, CV, CZ, DE, DJ, DK, DM, DO, DZ, EC, EE, EG, ES, FI, GB, GD, GE, GH, GM, GT, HN, HR, HU, ID, IL, IN, IQ, IR, IS, IT, JM, JO, JP, KE, KG, KH, KN, KP, KR, KW, KZ, LA, LC, LK, LR, LS, LU, LY, MA, MD, MG, MK, MN, MU, MW, MX, MY, MZ, NA, NG, NI, NO, NZ, OM, PA, PE, PG, PH, PL, PT, QA, RO, RS, RU, RW, SA, SC, SD, SE, SG, SK, SL, ST, SV, SY, TH, TJ, TM, TN, TR, TT, TZ, UA, UG, US, UZ, VC, VN, WS, ZA, ZM, ZW.

(84) **Designated States** *(unless otherwise indicated, for every kind of regional protection available)*: ARIPO (BW, CV,

(54) Title: SEISMIC MITIGATION AND GRID SCALING SYSTEMS FOR FLYWHEEL ASSEMBLIES

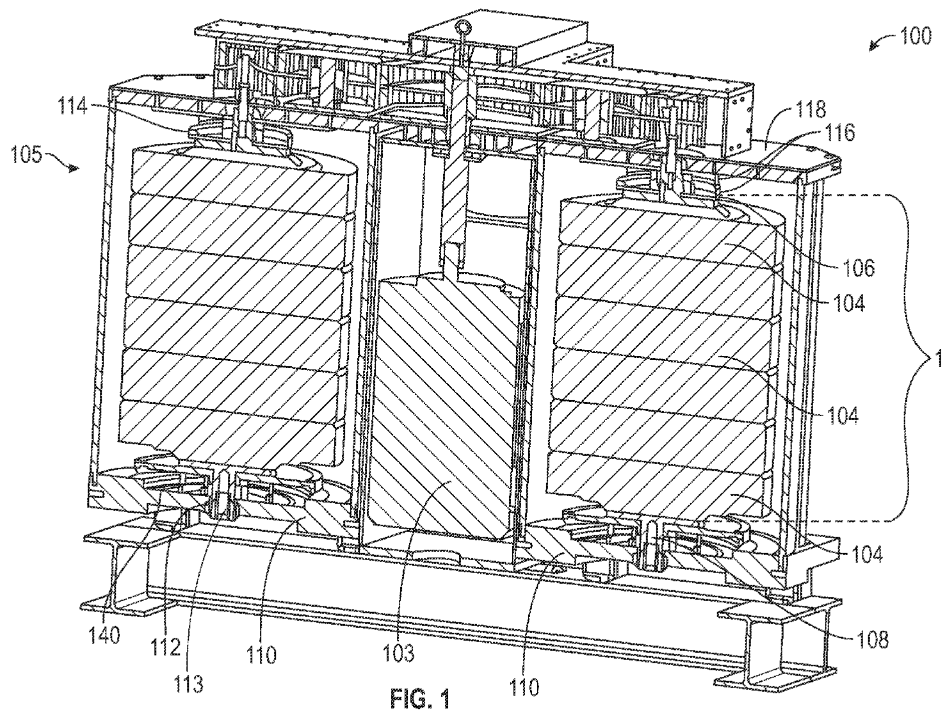

FIG. 1

(57) **Abstract:** A seismic wave mitigation system including a skid, a plurality of rods extending from the skid, a flywheel including a top plate and a base plate, the flywheel suspended by the rods, and a plurality of magnetic dampers, each magnetic dampers comprised of two halves, a first half secured to the base plate, and a second half secured to a surface opposite the base plate, wherein the magnetic dampers are configured to arrest movement of the flywheel.

[Continued on next page]

GH, GM, KE, LR, LS, MW, MZ, NA, RW, SC, SD, SL, ST, SZ, TZ, UG, ZM, ZW), Eurasian (AM, AZ, BY, KG, KZ, RU, TJ, TM), European (AL, AT, BE, BG, CH, CY, CZ, DE, DK, EE, ES, FI, FR, GB, GR, HR, HU, IE, IS, IT, LT, LU, LV, MC, ME, MK, MT, NL, NO, PL, PT, RO, RS, SE, SI, SK, SM, TR), OAPI (BF, BJ, CF, CG, CI, CM, GA, GN, GQ, GW, KM, ML, MR, NE, SN, TD, TG).

Published:

— *with international search report (Art. 21(3))*

SEISMIC MITIGATION AND GRID SCALING SYSTEMS FOR FLYWHEEL ASSEMBLIES

Technical Field

[0001] This disclosure generally relates to an isolation and particularly to isolation of heavy objects such as high-speed high-mass rotating machinery from the effects of seismic activity and a grid-scale flywheel energy storage system configured for efficient loading, deployment, and maintenance.

Background

[0002] There currently exists a worldwide push to transition from fossil fuels to renewable energy sources. Examples of these renewable energy sources include photovoltaic, wind power, and others. However, as is widely known, these renewable energy sources while providing plenty of energy, are not as highly portable or available for use on demand as fossil fuels are. Accordingly, there is a huge demand for an energy storage solution that would enable to storge of excess energy produced during the day, or while the wind is blowing, that can be used overnight or during times of minimal wind. The currently leading technology for energy storage are chemical batteries. The current leader in this technology are the various forms of Lithium-ion batteries. Despite being the current technology leader lithium-ion batteries are not without their issues

[0003] The first is that the production of lithium-ion batteries involves a significant ecological cost in terms of mining necessary to collect the materials needed for the battery chemistries. Secondly, most of that mining takes place in countries with a geo-political outlook that does not always comport with that of the US or the rest of the western world. Third, even when produced domestically, batteries such as lithium-ion batteries are subject to an enhanced fire risk. Indeed, lithium-ion fires pose grave dangers in that they essentially cannot be put out by normal means as there is no mechanism to break the fire triangle. Currently, the only mechanism to extinguish a lithium-ion battery fire is to submerge the burning structure in water and wait for them to burn out completely. As a result, it can take days for a lithium-ion battery fire to be extinguished. As can be appreciated, the environmental costs associated with such a fire, to say nothing of the interruption of provision of the electrical energy the batteries are intended to provide.

[0004] While lithium-ion batteries are a current leader in energy storage, they are not alone, and a number of alternatives are being developed. One such alternative is the flywheel, a system for mechanical storage of energy. Flywheels are not a new concept for energy storage. Flywheels in their simplest form are just a rotating mass and are employed on all types of machinery including most internal combustions engines, where the spinning mass helps rotate the crank shaft between firings of each cylinder, and thus smooth the operation of the internal combustion engine.

[0005] Another use of a flywheel is as a mechanical battery. In the mechanical battery application, rotation of the spinning mass stores energy as kinetic energy (energy of motion) that can then be used via for example gearing to rotate other machinery (e.g., a generator) to produce electrical energy. Modern designs of flywheels are generating renewed interest for the storage of energy and conversion to electrical energy, not least because they do not suffer any of the issues listed above relating to lithium-ion batteries.

[0006] While modern flywheels have been significantly developed to overcome hurdles that limited their adoption previously, there are always needs for improvement of the systems.

SUMMARY

[0007] One general aspect of the disclosure includes a seismic wave mitigation system including a skid; a plurality of rods extending from the skid; a flywheel including a top plate and a base plate, the flywheel suspended by the rods; and a plurality of magnetic dampers, each magnetic dampers may include of two halves, a first half secured to the base plate, and a second half secured to a surface opposite the base plate, where the magnetic dampers are configured to arrest movement of the flywheel.

[0008] Implementations may include one or more of the following features. The seismic mitigation system where the skid includes a plurality of rollers configured to traverse a rail. The rail is secured to a ceiling of the container. The seismic mitigation system may include a plurality of travel stop limiters. The seismic mitigation system may include a plurality of pockets formed in a floor of the container. The flywheel is suspended such that the two halves of the magnetic dampers are separated by gap. Each half of the magnetic dampers including magnetic elements which both attract and repel one another. The seismic mitigation system may include a height levelers secured to the skid. The seismic mitigation system may include a plurality attachment assemblies connected to an exterior of the flywheel. The rod is secured to the attachment assembly to suspend the flywheel. The seismic mitigation system may include a cantilever rod secured on one end to the attachment assembly. A second end of the cantilever rod is secured to a base. The tabs are configured to receive the cantilever rods. The seismic mitigation system may include a plurality of isolation dampers. Implementations of the described techniques may include hardware, a method or process, or computer software on a computer-accessible medium. One aspect of the disclosure is directed to a seismic wave mitigation system including a frame member having a generally u-shaped configuration and including a pair of vertical arms and a cross member; a plurality of pendulum springs connected to the frame member at a first end; a base configured to support a flywheel system, the plurality of pendulum springs connected to the base on a second end; and an elastomeric pad, where the plurality of pendulum springs suspends the base and the flywheel system above the elastomeric pad, the elastomeric pad is configured to limit vertical movement of the base as a result of seismic wave.

[0009] Implementations of this aspect of the disclosure may include one or more of the following features. The seismic wave mitigation system where the plurality of pendulum springs suspends the base 1/16th of an inch to ½ and inch above the elastomeric pad. The seismic wave mitigation system further including a plurality of magnets mounted on the base and a corresponding plurality of magnets associated with the elastomeric pad. The plurality of magnets associated with the elastomeric pad repel the plurality of magnets mounted on the base. The plurality of magnets associated with the elastomeric pad attract the plurality of magnets mounted on the base. A first portion of the plurality of magnets associated with the elastomeric pad are in attraction with a first portion of the magnets mounted on the base. A second portion of the plurality of magnets associated with the elastomeric pad repel a second portion of the magnets mounted on the base. The base is formed of steel. The frame member is formed of steel and has a I-beam, C-channel, rectangular cross-section. The seismic wave mitigation system including a plurality of frame members connecting pendulum springs to the base.

[0010] A further aspect of the disclosure is directed to an isolation damper including two halves, each half including, a rigid flange, a pair of band clamps secured to the rigid flange and extending away from the rigid flange, a floating plate suspended between and secured to the pair of band clamps. The damper also includes a connector secured to the floating plate of each half and securing the two halves to one another. Other embodiments of this aspect include corresponding computer systems, apparatus, and computer programs recorded on one or more computer storage devices, each configured to perform the actions of the methods and systems described herein.

[0011] Implementations of this aspect of the disclosure may include one or more of the following features. The isolation damper where the rigid flange of each half includes first holes configured to receive fasteners to secure the half to a foundation or to machinery. The machinery is a flywheel. The rigid flange of each half includes second holes, and the floating plate of each half includes third holes, where the second holes and the third holes are aligned to allow for passage of a fastener therethrough. The lumens are aligned with the second and third holes of each half and allow for passage of fasteners therethrough. The fasteners secure the floating plate of each half to the connector, and the second holes formed in the rigid flange provide access to the fasteners. The band springs have a single fold construction. The isolation damper further including at least one snubber shaped to be received in the fold of the band springs of each half. The at least one snubber is formed of rubber, foam, or another plastic material. The band springs have a double fold construction. The isolation damper further including at least one snubber shaped to be received in at least one fold of each band spring of each half. The band springs have a no fold hoop construction. The connector is formed of a polymeric material. The rigid flange, a pair of band clamps, and floating plate of each half are individually cut from plate material and welded together. The plate material is a steel. The steel is an AR-400 steel.

[0012] As further aspect of the disclosure is directed to a flywheel assembly including a flywheel having a mass of between 4000 lbs. and 20,000 lbs. and configured to rotate at between 5000 and 15,000 rpm; a plurality of isolation dampers placed to support the flywheel, where each isolation damper includes: two halves, each half having, a rigid flange; a pair of band clamps secured to the rigid flange and extending away from the rigid flange; a floating plate suspended between and secured to the pair of band clamps; and a connector secured to the floating plate of each half and securing the two halves to one another.

[0013] Implementations of this aspect of the disclosure may include one or more of the following features. The flywheel assembly where the band springs have a single fold construction. The flywheel assembly further including at least one snubber shaped to be received in at least one fold of each band spring. The flywheel assembly further including fasteners configured to secure the floating plate of each half to the connector of each isolation damper.

[0014] Yet a further aspect of the disclosure is directed to a grid-scale flywheel assembly. The grid-scale flywheel assembly includes a plurality of flywheel assemblies, each flywheel assembly including a gear box. The assembly also includes a plurality of motors, each motor including a gear box configured to mate with and drive the gear boxes of two or more of the plurality of flywheel assemblies; and a plurality of rails, where the plurality of motors and plurality of flywheel assemblies are configured to translate on the plurality of rails.

[0015] Implementations of this aspect of the disclosure may include one or more of the following features. The grid-scale flywheel assembly where each of the plurality of flywheel assemblies are rated at 25 kw-hr of energy storage. Each of the plurality of flywheel assemblies includes one or more vibration isolators. Each of the plurality of flywheel assemblies include a plurality of rollers. The plurality of rollers are configured to mate with the plurality of rails. The grid scale flywheel assembly further including a container configured to store the plurality of flywheel assemblies and plurality of motors. The plurality of crossmember are oriented transverse to and support the plurality of rails. The plurality of crossmembers are profiled to receive the plurality of rails. The grid scale flywheel assembly further including a deck supported by the crossmembers, the deck providing access to the plurality of flywheel assemblies and plurality of motors. The grid scale flywheel assembly further including at least one door configured to secure the plurality of flywheel assemblies and plurality of motors within the container. Each of the plurality of flywheel assemblies include a magnetic lift bearing. Each of the plurality of flywheel assemblies including a magnetic levitating bearing, where the combination of the magnetic lift bearing and the magnetic levitating bearing substantially eliminates friction within each of the plurality of flywheel assemblies. The gear box associated with each of the plurality of motors is a magnetic gear box and the gear box associated with each of the plurality of flywheel assemblies is a magnetic gear box. The magnetic gear box of each of the plurality of motors mates with a drives a subset of the magnetic gear boxes associated with the plurality of flywheel assemblies. The gear box of each of the plurality of motors mates with and directly drives the magnetic gear boxes associated with at least three of the plurality of flywheel assemblies. The gear box of each of the plurality of motors indirectly drives the magnetic gear boxes associated with at least three of the plurality of flywheel assemblies. The energy source is one or more of a solar energy source, a wind power source, or a grid power source. The grid scale flywheel assembly further including a plurality of generators, each generator operatively coupled to the gear box associated with one or more of the plurality of flywheels. The plurality of generators is coupled to the grid, where upon demand energy stored in the plurality of flywheel assemblies is converted to electrical energy and supplied to the grid.

[0016] Still a further aspect of the disclosure is directed to grid-scale flywheel assembly. The grid-scale flywheel assembly includes a plurality of flywheel assemblies, each flywheel assembly including a magnetic gear box; a plurality of motors, each motor including a magnetic gear box configured to mate with and drive the magnetic gear boxes of two or more of the plurality of flywheel assemblies; a plurality of rails, where the plurality of motors and plurality of flywheel assemblies are configured to translate on the plurality of rails; a container configured to receive the plurality of flywheel assemblies and the plurality of motors on the plurality of rails, the plurality rails supported by a plurality of crossmembers, where the plurality of crossmembers are profiled to receive the plurality of rails; a deck supported by the plurality of crossmembers and configured to provide access to the plurality of flywheel assemblies and plurality of motors; a plurality of rollers associated with each of the plurality of flywheel assemblies and plurality of motors, where the plurality of rollers are in rolling engagement with the plurality of rails; and a plurality of vibration isolators associated with each of the plurality of flywheel assemblies and plurality of motors.

BRIEF DESCRIPTION OF THE DRAWINGS

[0017] FIG. 1 is a cross-sectional view of a flywheel system in accordance with the disclosure;

[0018] FIG. 2 is a perspective view of a seismic activity mitigation system for the flywheels of FIG. 1 in accordance with the disclosure;

[0019] FIG. 3 depicts a detailed view of a portion of the seismic activity mitigation system of FIG. 2 in accordance with the disclosure;

[0020] FIG. 4 depicts a cantilever system in accordance with the disclosure.

[0021] FIG. 5 is a perspective view of a seismic activity mitigation system for flywheels in accordance with the disclosure;

[0022] FIG. 6 is a perspective view of multiple flywheels employing the seismic activity mitigation system of FIG. 5 in accordance with the disclosure;

[0023] FIG. 7 is a further perspective view of multiple flywheels employing the seismic activity mitigation system of FIG. 5 in accordance with the disclosure;

[0024] FIG. 8 a motor and flywheels employing the seismic activity mitigation system of FIG. 5 in accordance with the disclosure;

[0025] FIG. 9 is a partial view of a flywheel in accordance with the disclosure employing a travel limiter;

[0026] FIG. 10 is a partial view of a flywheel in accordance with the disclosure employing a balancing feature;

[0027] FIG. 11A is a partial view of a flywheel in accordance with the disclosure employing a cantilever spring;

[0028] FIG. 11B is a perspective view of a seismic activity mitigation system for flywheels in accordance with the disclosure;

[0029] FIG. 12 is a perspective view of a three-part vibration isolator in accordance with the disclosure;

[0030] FIG. 13 is a perspective view of a flanged spring in accordance with the disclosure;

[0031] FIG. 14 is a front view of the flanged spring in accordance with the disclosure;

[0032] FIG. 15 is a perspective view of a second three-part vibration isolator in accordance with the disclosure;

[0033] FIG. 16 is a front view of a flanged spring of three-part vibration isolator of FIG. 4;

[0034] FIG. 17 is a perspective view of a connector employed in a three-part isolator in accordance with the disclosure;

[0035] FIG. 18 is a perspective view of another isolator in accordance with the disclosure;

[0036] FIG. 19 is a perspective view of a flanged spring of the isolator of FIG. 7; and

[0037] FIG. 20 is a perspective view of another isolator in accordance with the disclosure;

[0038] FIG. 21 is a perspective view of a grid-scale flywheel system in accordance with the disclosure;

[0039] FIG. 22 is a top view of a grid-scale flywheel system in accordance with the disclosure;

[0040] FIG. 23 is a side vie of a grid-scale flywheel system in accordance with the disclosure;

[0041] FIG. 24 is a top perspective view of a grid-scale flywheel system in accordance with the disclosure; and

[0042] FIG. 25 is a front perspective view of a grid-scale flywheel system in accordance with the disclosure.

DETAILED DESCRIPTION

[0043] This disclosure is directed to a seismic quake and earthquake mitigation mechanism. In one aspect of the disclosure, the seismic quake and earthquake mitigation mechanism for use with one or more flywheels having a weight of between 4000 and 20,000 lbs. and rotating at between 5000 and 15000 RPM.

[0044] In one example, a flywheel may store 25 kW-hr of energy. A typical single-family US home of approximately 2000 square feet may use between 25 and 40 kW-hr of energy per day. A photovoltaic solar panel installation on the roof may generate between 30 and 40 kW-hr of energy per day (during an average summer day). However, much of that usage occurs during the early morning, evening, and nighttime hours, times when little to no energy is being produced by the solar panels. Thus, even though the solar panels can produce sufficient energy to power the house (most days) there is a usage and production disparity that requires some form of energy storage to overcome.

[0045] Flywheels provide an energy storage solution that can bridge the production and usage disparity without the environmental and maintenance challenges of batteries. Nonetheless, despite the lack of environmental and maintenance challenges, flywheels, which as noted above may weigh for example 8,000 lbs. and spin at for example 15,000 RPM are not without their challenges. One of the challenges of all rotating machinery is vibration, and those challenges only increase with high mass rotating at high speeds.

[0046] A flywheel system 100 is depicted in Fig. 1. The flywheel system 100 includes two flywheels 102 driven by a single motor 103. Each flywheel 102 includes multiple flywheel segments 104, each flywheel segments 104 is disposed in a stacked configuration such that a lower surface of a first flywheel segment 104 abuts or otherwise contacts an upper surface of an adjacent flywheel segment 104. Each flywheel segment 104 is coupled to one another using any suitable means, such as welding, adhesives, fasteners, amongst others. Where welding is employed, each flywheel segment 104 is coupled to one another by laser welding, electron beam welding, etc. Alternatively, the flywheel 102 may have a single monolithic component construction.

[0047] The flywheel 102 is disposed within a flywheel enclosure 105. The flywheel enclosure 105 may be formed of a steel pipe or other suitable material capable of maintaining a deep vacuum (e.g., approaching 0 psi, 29.9 in Hg vacuum, etc.) when appropriately sealed. The flywheel enclosure 105 mates with a base plate 110 and one or more rubber sealing rings (not shown) may be employed to ensure a substantially air-tight fit between the flywheel enclosure 105 and the base plate 110. A bore 112 in the base plate 110 is configured to receive a portion of a bottom spindle 108 and a bearing 113 (e.g., a ball or roller bearing) is employed in the bore 112 to receive the portion of the bottom spindle 108 and take up any lateral forces.

[0048] Mounted on the top spindle 106 of each flywheel 102 is a magnetic lift bearing 114. The magnetic lift bearing 114 is formed of two halves 116. A lower half 116 is secured to a top surface of spindle 106, and an upper half 116 may be secured to a top plate 118 of the flywheel 102. The top plate 118 along with bottom plate 110 completes the flywheel enclosure 105 and form a vacuum tight space in which the flywheel 102 rotates substantially free of friction. The spindle 106 extends into a recess 119 in the top plate 118 and a bearing (e.g., ball or roller bearing) 120 receives a portion of the top spindle 106 and takes of the lateral or radial loads of the flywheel 102.

[0049] Fig. 2 depicts a perspective view of two a flywheel system 100 mounted on a seismic quake mitigation platform 200. For ease of description, the flywheel system 100 of Fig. 2 is depicted without the motor 130, or gearing system transferring mechanical energy from the motor to the flywheels 102. As will be appreciated, though not shown, the flywheel system 100 when deployed will also include a generator mechanically connected to the flywheels 102 such that the energy stored in the flywheel 102 by its high-speed rotation can be converted into electrical energy for use as desired (e.g., powering a house, building, equipment, or feeding an electrical grid).

[0050] The seismic quake mitigation platform 200 is configured to mitigate forces applied to the flywheel system 100 through seismic activity (e.g., earthquakes, volcanoes, etc.). The general concept involves the simple pendulum effect. The seismic quake mitigation platform 200 includes one or more vertically mounted frame members 202. The frame members 202 may be formed of I-beams, C-channel, or rectangular structural tubing. The frame members 202 may be for example, structural steel and welded into a U-shape. Vertical arms 204 of the frame members 202 are mounted (e.g., one end embedded in a concrete foundation), with a cross member 206 connecting the two vertical members 202. Optionally, a cross member (not shown) may connect frame members 202 together and form a common frame. Pendulum springs 208 are attached to and extend from the cross members 206 and extend vertically, parallel to the vertical arms 204, to connect to a base 210 which supports the flywheel system 102. The base may be formed of steel I-beam, C-channel, or rectangular structural tubing and welded to form the base 210. The attachment points 212 of the pendulum springs 208 to the base 210 and the frame members 202 allow the pendulum springs 208 to freely pivot about the attachment points 212.

[0051] In one example, an end of the pendulum spring 208 may have a threaded feature allowing for length adjustment and the leveling of the base 210. In one example, a spherical nut (not shown) may be employed allowing the pendulum spring 208 to freely pivot about the sphere.

[0052] Below the base 210 is placed an elastomeric pad 214. The base 210 is suspended by the pendulum springs 208 a small distance above the elastomeric pad 214. In one example, the space is between 1/16th and ½ of one inch, alternatively the spacing may be from about 5 mm to about 1.5 cm. The elastomeric pad 214 acts as a snubber for motion of the base 210 and flywheel system 100 limiting any motion in the vertical direction in the event of seismic activity causing the flywheel system 100 and base 210 to move vertically.

[0053] As an alternative as depicted in Fig. 3, a series of magnets 216 placed both on the base 210 and on the surface beneath the base 210 (e.g., on the elastomeric pad 214) can be used to dampen motion in the downward vertical direction. If the magnets 216 are placed such that the magnets 216 beneath the base 210 repel the magnets 216 on the base 210, they will both dampen the motion in the downward vertical direction and also relieve the weight load of the combined mass of the base 210 and flywheel system 100 on the pendulum springs 208. Reliving the pendulum springs 208 of the weight load of the base 210 and flywheel system 100 will improve the material memory and life span of the pendulum springs 208. Alternatively, the magnets 216 may be placed such that they are in attraction, which will at minimum dampen the upward vertical motion of the flywheel system 100 and base 210 in the event of seismic activity causing the surface in which the vertical arms 204 of the frame member 202 are mounted to move. In addition, when placed such that the magnets 216 attract one another, the magnetic forces act to limit movement of the base 210 and flywheel system 100 in the horizontal direction.

[0054] Because the base 210 and flywheel system 100 is suspended above the elastomeric pad 214 a retaining force is necessary to prevent the motor 130 from causing the base to twist between the pendulum springs 208. However, if the springs in the pendulum springs 208 have a low spring rate (stiff to very stiff springs), only a relatively a small retaining force is needed to prevent the torque of the drive motor from twisting the assembly. The retaining force can be achieved by the magnets mounted on the base 210 and below the base 210, described above.

[0055] In one aspect of the disclosure a portion of the series of magnets 216 may be placed such that they are in attraction and others can be placed to repel one another. As a result, the repelling forces reduces the vertical load of the base 210 and flywheel system 100 and limits the vertical movement of the base 210 and flywheel system as a result of seismic activity. The attracting forces of others of the magnets can limit horizontal movement of the base 210 and flywheel system 100. Moreover, these magnets that are in attraction can provide the restraining force to prevent twist of the base 210 as a result of the motor 130. Still further, the magnets 216 may be arranged in an alternating pattern such that the benefits of both repulsion and attraction in limiting movement of the base 210 on which the flywheel system 100 are achieved.

[0056] Though shown in Fig. 3 as having magnets 216 on top of the elastomeric pad 214, the disclosure is not so limited. The magnets 216 may be embedded within the elastomeric pad 214 or placed below the elastomeric pad 214 and embedded in the surface on which the elastomeric pad rests.

[0057] Fig. 4 depicts additional aspects of the disclosure. Fig. 4 depicts a first magnetic pad 218 mounted to the base 210. A second magnetic pad 220 is mounted on a cantilever arm 222 which when not acted on by the magnetic pads 218 and 220 lies in a horizontal plane substantially parallel to the base 210. The cantilever arm 222 extends from a fixed end 224 which may be mounted in an opening in the pad 214 which rests beneath the base. Each magnetic pad 218 or 220 may be a series of magnets arranged in attraction, repulsion, or both. In Fig. 4 the two magnetic pads are in attraction. The magnetic force attracting the magnetic pads 218 and 220 cause the cantilever arm 222 to bend towards the base 210. The magnetic attraction of the magnetic pads 218 and 220 acts to hold the base 210 in place relative to the remainder of the seismic quake mitigation platform 200. Cantilever arms 222 may be located at both ends of the seismic quake mitigation platform 200, as well as at intervals along the length of the seismic quate mitigation platform 200. If due to seismic activity the base 210 were to move in the longitudinal direction L (as shown in Fig. 4), the spring force of the cantilever arms 222, the attractive force of the magnetic pads 218 and 220, is overcome and the cantilever arm moves clear of the base 210 as it moves. As the base swings in the opposite of the initial direction, the magnetic forces of the magnetic pads 218 and 220 cause the cantilever arm 222 to again flex the cantilever arm towards the base 210. The combination of the energy required to bend the cantilever arm 222 and the attractive forces of the magnetic pads 218 and 220 act as a magnetic break to effectively slow any swing movement of the base 210 and bring the base 210 into the position depicted in Fig. 4 with the movement of the base 210 caused by the seismic activity arrested.

[0058] Another feature of the assembly in Fig. 4 is a series of tethers 226. The tethers 226 allow the magnetic pad 220 to move vertically towards the magnetic pad 218. The tethers 226 may be beneficial in assisting to absorb small vibrations of the base, by transferring the vibrations to the cantilever arm 222 and be dissipated. Further the base 210 may have the magnetic pad 218 formed in a cut-away area (not shown) within the pad 214. In this manner, the magnetic pads 218 and 220 mitigate the forces imparted on the flywheel system 100.

[0059] Fig. 5 depicts a further aspect of the disclosure related to seismic activity mitigation. As depicted in Fig. 5, a flywheel 102 is suspended by a plurality of rods 302 from a skid 304. The rods 302 extend from the skid 304, through the top plate 118 and through the bottom plate 110.

[0060] As depicted in FIG. 6, the flywheel 102 is suspended by the rods 302 from the skid 304. Rollers 306 allow for the skids 304 to move along a rail 308 formed, for example, in or near a ceiling of a container 310. The rail 308 may be formed for example from an I-beam or C-channel formed material. The container 310 is shown in Fig. 6 in a cut away view, with the top and ends of the container 310 removed to provide greater clarity. As depicted in Fig. 6, each of three flywheels 102 and a motor 312 (Fig. 7) include a magnetic gear box 314. The rods 302 may pass through the magnetic gear boxes 314. The magnetic gear boxes 314 enable the contactless transfer of rotational energy from the motor 312 to the flywheels 102. The magnetic gear boxes 314 may be operated under a vacuum and utilize magnetic bearings to lift or pull the magnetic gears to substantially eliminate friction within the magnetic gear boxes 314.

[0061] The rods 302 suspend the flywheels 102, the motor 312, and the magnetic gear boxes 314 from a floor 316 of the container 310. Magnetically connected to the magnetic gear box 314 connected to the motor 312 are a number (e.g., 4) generators 318. The generators 318 convert the rotational energy stored within the flywheels 102 into electrical energy for use with machinery, lighting, equipment, etc. As described above, and shown in Fig. 7, the rail 308 is secured to a ceiling 319 of the container 310 and the rollers 306 support the skid 304 and allow the flywheels 102 and motor 312 to move along the rails 308.

[0062] In Fig. 7 magnetic dampers 320 are located on each corner of the flywheel 102. Each magnetic tamper 320 is formed of two halves, one half mounted to the floor 316 of the container and one half mounted to the base plate 110 of the flywheel 102. Each half of the magnetic damper includes a plurality of magnets. As with the magnetic pads 218, 220, the plurality of magnets on the halves of the magnetic damper 320 may be arranged to repel the two halves of the magnetic damper 320 (e.g., present the same polarity), attract the two halves towards each other (e.g., present opposite polarity), or a combination of each to both attract and repel the two halves. The magnetic dampers 320 operate substantially similarly to the combination of the magnetic pads 218 and 220. Thus, during normal operation, the magnetic dampers 320 help to support hold the flywheel 102 in place vertically and horizontally. The magnetic dampers 320 also absorb forces applied to the flywheel 102 including any torque induced by the spinning mass of the flywheel 102 is also absorbed. Still further, in the event of a seismic event, the magnetic dampers 320 will slow and arrest any induced movement of the flywheels 102 by applying a magnetic break to the moving flywheel 102. Those of skill in the art will notice that no magnetic dampers 320 are required under the motor 312. In part this is due to the significantly smaller mass of the motor 312 and generators as compared to the flywheels 102. Thus, the motor 312 can rely on the magnetic dampers 320 of the flywheels 102 to limit motion of the motor 312 caused by a seismic event.

[0063] The container 310 is an ideal location for the placement of the flywheels 102 and the motor 312 in that it allows each element to be brought on site individually and assembled in place. As will be appreciated, a group of flywheels 102 (e.g., 10-20) would have significantly too much mass alone, let alone in combination with the container 210, the motor 212, the magnetic gear boxes 214 to allow for pre-assembly and shipping to the site. Accordingly, to assemble the container 310 of flywheels 102, the flywheels are arranged individually and hoisted or raised to that the rollers 306 on the skid 304 are aligned with the rail 308 and then rolled along the rail to a final location within the container 310. However, as will be appreciated, regardless of the tolerances of manufacturing, final assembly will require adjustments to ensure that all of the magnetic gear boxes 314 and flywheels 102 are perfectly aligned vertically. One such adjustment is the use of skid height leveler 322 as shown in Fig. 8. Placement of skid height levelers 322 on the rail 308 to interface with each skid 304 on at least each corner of the skid 304 allows for each skid 304 to be raised and leveled to align each magnetic gear box 314, and to ensure that the flywheels are vertically aligned. Additionally or alternatively, nuts (not shown) can be attached to the rods 320 which may optionally include threading on a portion or along the entire length of the rods 320. By threading the nuts on to the rods 320 the effective lengths of the rods 320 can be adjusted and the alignment of the flywheels 102, motor 312 and magnetic gear boxes 314 achieved.

[0064] Fig. 9 depicts a bottom portion of the flywheel 102. Extending from the base plate 210 are travel stop limiters 324. A travel stop limiter 324 is located on each corner of base plate 210, thus each flywheel 102 may include four travel stop limiters 324. Each travel stop limiter 324 is received in a pocket 326 formed in the floor 316. The travel stop limiters 324 perform multiple functions. During installation, the travel stop limiters 324 provide a rough guide for placement of the flywheels 102 and motors 312 within the container 310 along the rails 308 when they are received in the pockets 326. In addition, the travel stop limiters 324 limit the vertical movement of the flywheels 102 and the motors 312. Still further, in the event of a seismic event, the halves of the movement dampers 320 (not shown in Fig. 9) are prevented from contacting one another and potentially being damaged. Instead each travel stop limiter 324 contacts the bottom of the pocket 326 to prevent the flywheel 102 from moving in the direction of the floor 316, and at the same time prevent the halves of the movement dampers 320 from impacting each other. Further, the pockets 326, acting on the travel stop limiter 324 limit the horizontal movement of the flywheels 102 and allow the movement dampers 320 to more quickly arrest the movements of the flywheel.

[0065] Figs. 10 and 11 depict a further aspect of the disclosure related to the rods 302. As described above, the rods 302 extend from the skid 304 to the base plate 110. The magnetic gear box 314 includes clearance holes 328 formed in a top plate 330 of the magnetic gear box 314. Clearance holes 328 are also formed in the top plate 118 of flywheel 102. The rods 302 extend to and are captured by a cantilever arm 332, here depicted as a right-angled feature connected to the enclosure 105 of the flywheel 102. The cantilever arms 322 are mounted to the enclosure 105 at approximately the vertical center of gravity of the flywheels 102. As can be seen in Fig. 10 the rods 302 are captured by the attachment assembly 332 and secured thereto.

[0066] In Fig. 11A the cantilever arms 332 receive compression rods 334 connecting the cantilever arms 332 to the base 210 on which flywheels 102 are secured. The compression rods 334 are in compression any may be received in tabs 336 secured to the base 210.

[0067] With regards to the seismic activity mitigation systems depicted in Figs. 5-11, the combination of the rods 302 suspending the flywheels 102, the magnetic dampers 320, the cantilever arms 332, and/or the compression rods 334 can be employed to mitigate the seismic activity. In addition, these features, including the skid 304, rollers 306, rails 308, and travel stop limiters facilitate installation of the flywheels 102 in the container 310. Still further, the rods 302 height levelers 322 facilitate alignment of the magnetic gear boxes 314.

[0068] Fig. 11B depicts yet a further aspect of the design of Fig. 11A in which the rods 302 are not captured by the cantilever arms 332, but extend to and through the base 110 to an attachment plate 338. The rods 302, connect through the attachment plate 338 and support the vertical weight of the flywheel 102 with the rods 302 in tension. Though not shown, magnetic dampers 320 may be positioned beneath the attachment plate 338 and mitigate movements of the flywheel 102. The compression rods 334 are held in compression between the attachment plate 338 and the cantilever arms 332. By having both tension forces (e.g., via rods 302) and compressive forces (e.g., via compression rods 334), and by transferring some of these forces to approximately the vertical center of gravity of the flywheel 102, the forces generated by seismic activity (and other systematic forces) can transferred to connected components of the flywheel system and their impact greatly reduced.

[0069] Yet another aspect of the disclosure is directed to addressing a challenge that all rotating machinery must contemplate, vibrations. As will be appreciated, the challenges presented by vibrations are only increased with the high speeds and high mass contemplated in connection with the flywheels 102 described herein.

[0070] FIG. 12 depicts a vibration isolator 400 in accordance with the disclosure. The vibration isolator 400 is formed of two halves 402 which substantially mirror each other. Each half of the isolator includes a rigid flange 404. Extending vertically from the flange 404 are band springs 16. The band springs 406 may be formed of the same material as the flange 404. In one example, AR-400 steel may be employed to form both the flange 404 and the band springs 406. The band springs 406 may have a single U-shaped bend, as depicted in FIG. 13, and terminate at a floating plate 408. The band springs 406 may be formed separately from the rigid flange 404 and welded to the rigid flange 404 or the entire half 402 may be printed using metal 3D printing technologies.

[0071] As depicted in FIG. 12, the two halves 402 of the vibration isolator 400 are arranged such that the flange 404 of a first half 402 is secured via fasteners (not shown) placed in openings 410 to a rigid surface such as a concrete pad, a steel frame, etc. as is commonly used to secure rotating machinery. A second half 402 is inverted relative to the first half 402 such that the band springs 406 of the second half 402 (e.g., the top half 402) is placed substantially in parallel to the U-shaped opening 412 (FIG. 14) formed by the band spring 406 of first half 402.

[0072] Though generally described herein as being formed of steel and particularly AR-400, the disclosure is not so limited. In some instances, the vibration isolator 400 may be formed of rubber, a thermoplastic elastomer, plastic, a filled plastic, ceramics and others without departing from the scope of the disclosure. Further, the vibration isolator 400 may be formed via 3D printing or additive manufacturing techniques and made as a single component. Alternatively, the vibration isolator 400 may be formed of two or three separate components and assembled together as outlined herein below or may be resistance welded to form a unitary component. Still further the first half 402 and the second half 402 may be formed such that each has a different stiffness. As a result, the vibration isolator 400 may have a different stiffness in a first direction as compared to a second direction.

[0073] FIGS. 13 and 14 depict further features of each half 402 of the vibration isolator 10. As can be seen in FIG. 14, the floating plate 408 may have a greater material thickness than the band springs 406. Further, the rigid flange 404 may have varying thickness along its length, as shown the ends of the rigid flange 404 have a greater thickness than a central portion. Altering thicknesses of the elements of the half 402 of the vibration isolator 400 changes the dynamics and harmonics of the isolation damper 400.

[0074] Referring to FIG. 12, a connector 414 (shown in detail in FIG. 15) is placed between in the U-shaped opening 412 between the band springs 406 of the first half 402 and the second half 402. The connector 414 is employed to unite the two halves 402. The connector 414, may be formed of the same material as either the first half 402 or the second half 402 and may be integrally formed with one of the halves 402 such that the vibration isolator 400 is formed of just two separate components, As depicted in FIG. 15, the connector414 is a solid cube shape formed of, for example, an elastomeric material. Additionally, the connector 414 may be a vulcanized to the structure or dipped in a liquid material formed of rubber and/or plastic, injection molded directly onto the two halves (either before or after assembly), or by another bonding technique. Though shown as a cube, the connector is not so limited and could alternatively be formed of parallel flexures or a U-shaped component connecting the two halves 402. The flexures or U-shaped component could act as additional springs in two axes.

[0075] As shown in FIG. 15, the connector 414 has a number of holes 416 that allow for alignment of the two halves 402 of the isolation damper 400. The holes 416 align with holes 418 formed in each half 12. The holes 420 and 416 allow fasteners (not shown) to be inserted and pass-through holes 418 in the floating plate 18. The fasteners also pass through the connector 414 and enable a first half 402 to be secured to the second half 12, with the connector 414 secured therebetween. With the two halves 402 secured together, with the connector 414 therebetween, the isolation damper 400 is complete. The rotating machinery can then be secured to the rigid flange 404 via the holes 20. Fig. 11 depicts isolation dampers 400 securing the flywheel 102 to the base 210.

[0076] The isolation damper 400 functions as a three-axis spring, supporting the rotating machinery vertically (Z-axis) and allowing some deflection of the band springs 16, but limited by the presence of the connector 414. The two pairs of band springs 406 limit movement in both the X and Y axes (orthogonal to the Z-axis). Each of the three axes can have an individualized spring force, or all three axes may have the same spring force. The stiffness of the band springs 406, and thus the entire isolation damper 400 can be varied between the two halves 402 to provide a softer isolation and dampening system along one axis (i.e., in one plane) and a much stiffer isolation and dampening system along a second axis normal to the first axis thus limiting rocking motion of the rotating machinery, particularly when multiple isolation dampers are used to secure the rotating machinery.

[0077] The spring force of the band springs 406 is a function of the height of the band springs, the length of the flat plate from which they are formed (e.g., by bending over a mandrel), and the thickness of the flat plate. The exact dimensions of the flat plate and therewith the band springs 406 can be selected based on the weight of the rotating machinery, the frequencies of the vibrations produced by the rotating machinery, and other factors.

[0078] Though shown in FIGS 12-15 with the band springs 406 having just a single fold, the disclosure is not so limited. As shown in FIGs. 16 and 17 the band springs 406 may have a double fold construction. As will be appreciated, the additional folds can change the range of frequencies that the isolation damper 400 is effective. The use of more than two folds, e.g., three, four, five or more folds is contemplated within the scope of the disclosure.

[0079] In addition, band spring 406 may have no fold hoop design as depicted in FIGs. 18-20. FIG 18 depicts a full isolation damper 400 formed of two halves 402. Rather than the band springs 406 having folds, the band springs 406 have a hoop shape (e.g., round, or semi-circular) that connects the rigid flange 404 and the floating plate 408. As with other aspects of the disclosure, the shape of the band springs 406 and thickness of material from which they are formed determine the spring force of the band springs 406 that is used to resist the vibrations of the rotating machinery (e.g., the flywheel) which the isolation dampers 400 support.

[0080] FIG. 20 depicts a further configuration of the halves 402 of the isolation damper 400 where the band springs 406 have a different no-fold hoop design. Though the shape of the components of the isolation damper 400 in FIG. 20 are different than that of FIG. 19 or for that matter FIG. 12, the functions of the components described therein are substantially the same.

[0081] In one aspect of the disclosure, the components of the isolation damper 400 can all be formed of flat plate (e.g., steel) and water jet cut to the appropriate sizes. As noted above, the band springs may be bent over a mandrel to form the folds. The band springs 406 may be welded to the floating plate 408 and to the rigid flange 404. Using conventional machine shop operations, the holes 410, 418, 420 may be formed (e.g., by drilling, milling, or water jet cutting). This completes the construction of a first half 402 which can be fastened to a second half 402 as described above. Though described is being connected via welding, other joining processes may be employed including bolting, welding, brazing, or soldering without departing from the scope of the disclosure.

[0082] In another aspect of the disclosure, one or more snubbers formed of, for example, rubber, foam, or another plastic material, can be inserted into the gaps formed in the band springs 406 created by the folds. The snubbers further dampen the vibrations that can be transmitted from the rotating machinery to the isolation damper 10.

[0083] In one aspect of the disclosure, a flywheel assembly is mounted to a steel frame as depicted in FIG. 11. Four, six, or eight isolation dampers 400 can be secured to the steel frame.

The isolation dampers 400 are also mounted to the ground, for example a concrete pad or similar structure typical for support of rotating machinery. In this way, the vibrations that might be induced by the rotation of the flywheel, particularly at certain frequencies (e.g., resonance frequencies), can be isolated from the surrounding environment and not endanger surrounding property and personnel, or the flywheel itself.

[0084] As suggested by the container 210 employed in, for example Figs. 5-11, a further aspect of the disclosure is directed to a grid-scale energy storage system where multiple flywheels 102 are housed together to store greater magnitudes of energy in one location. An aspect of the disclosure is directed to a grid-scale flywheel-based energy storage system configured to store in excess of 450 kWh of energy. These grid-scale flywheel-based energy storage systems may be containerized to promote security, efficient installation, deployment, and maintenance. As will be described below, the grid-scale flywheel-based energy storage system may include a rail system enabling efficient set-up and where necessary removal or installation of components.

[0085] An individual flywheel as contemplated by this application includes a spinning mass of between 4,000 and 15,000 lbs. The mass is driven by an electric motor to a rotate at between 5,000 and 15,000 RPM. Generators 218, connected to the flywheel enable conversion of the mechanical energy of the rotating mass into electrical energy. In one example, a single flywheel may store 25 kW-hr of energy. As will be appreciated, employing 20 such flywheels will result in a capacity of 500 kW-hr. Thus, deployment of multiple such energy storage systems together can achieve grid-scale storage capacity, which is typically measured in megawatts (MW).

[0086] As is well known, photovoltaic solar panels can only capture the sun’s energy during daylight hours. Similarly, wind generators are only configured to capture energy at times where there is sufficient wind to move the wind turbine blades. In addition to the need for wind, wind generators also experience times when there is too much wind, and thus must be shut down in order to prevent damage to the turbine blades and other portions of the generator. Both of these energy production (or better said energy conversion) systems create a dynamic in which there may be greater production than usage and also significant durations where there is little to no energy production. Compounding this lack of production is that these times of lacking energy production may coincide with times of significant demand (e.g., at night when lights and heating are necessary). As a result, a means of storing the energy being produced by solar and wind generators is needed.

[0087] However, the disclosure is not so limited, and a variety of other applications are also contemplated. Another application is an on-grid emergency or peak demand energy storage. For example, certain portions of the electrical grid may see significant peaks in demand at certain times of the day. This peak may occur, for example, during the summer in the afternoon hours when ambient temperatures reach their peak. This coincides with maximum energy drawn on the grid as a result of air conditioning in buildings and housings. At times of such peak demand, the demand for energy may exceed the capacity of the grid and absent intervention (e.g., bringing on-line a so-called peeker plant) to satisfy that increased demand brownouts or even blackouts can commence. Thus, one application of this disclosure is as a stored energy peeker plant, wherein the grid-scale energy storage system is brought onto the grid to meet the transient (e.g., a few hours) demand until the grid demand reduces (e.g., following sunset). Alternatively, the grid-scale energy storage may be employed as a form of uninterruptable power supply, providing the necessary power to the grid until a peeker plant can be initialized and brought on-line.

[0088] Still a further application of the disclosure is related to a localized residential energy storage facility. A typical single-family US home of approximately 2000 square feet may use between 25 and 40 kW-hr of energy per day. A photovoltaic solar panel installation on the roof of such a typical home may generate between 30 and 40 kW-hr of energy per day (during an average summer day). However, much of the energy usage occurs during the early morning, evening, and nighttime hours, times when little to no energy is being produced by the solar panels. Thus, even though the solar panels can produce sufficient energy to power the house (most days) there is a usage and production disparity that requires some form of energy storage to overcome. Further there are efficiencies of scale, thus while each home might have its own flywheel energy storage unit, there are efficiencies that can result in having a group of homes (e.g. 10-50) operably connected to a grid-scale energy storage for those homes. The solution, as described herein, allows all of the connected homes to send excess power to the grid-scale energy storage unit during times of excess production, and to draw on the stored energy during times where usage exceeds energy production. In this way, the group of homes can reduce or eliminate their reliance on the electrical grid, have a source of emergency energy during times of brown outs or blackouts, and generally provide for their energy needs. Further, energy in excess of capacity of the grid-scale energy storage system may be sold back to the companies operating the local electrical grid and used to supply energy to homes and businesses not connected to the grid-scale energy storage system.

[0089] While the arrangement in Fig. 1 might store, for example, 50kW-hr of energy when fully charged (25 kW-hr per flywheel 102), as noted above, that is insufficient to be considered a grid-scale energy storage solution. Fig. 21 depicts a grid-scale flywheel system 500. As shown in Fig. 21 the grid-scale flywheel system 500 includes 18 flywheels 102, each storing between 25 and 50 kW-hr of energy. Thus, at minimum the grid-scale flywheel system stores approximately 450 kW-hr of energy, making it a true grid-scale solution. The grid-scale flywheel system 500 includes three motors 312, each motor 312 is connected, either directly or indirectly to all of the flywheels 102. Effectively, however, in the example of Fig. 21, each motor 312 must be sized to provide power to 6 of the flywheels assemblies 102. In the case of 25kW-hr flywheels 102 each motor 312 may be rated at, for example, 150 kW. Each motor 312 is connected to a gear box 314. Each gear box 314 may include a number of gears (e.g., pinion and bull gears, or sun and planetary gears) that enable the motor 212 to spin at 3600 RPM (i.e., a standard AC motor speed), and when coupled to the gear box 314 on each flywheel 102, cause the flywheel 102 to spin up to its rated RPM (e.g., 10,000 RPM). The gear boxes 314 may be magnetic gear boxes including a variety of magnetically coupled gears, this allows multiple gear boxes 314 to be driven from a single motor 312. In some instances the gear box 314 is driven directly by the a magnetic coupling of the gear box 314 driven by the motor 312, however, in other instances the gear box 314 is passively driven, that is there is no direct magnetic coupling between the gear box 314 on the flywheel 102 and the gear box 314 of the motor 312. Instead, the gear box 314 may only be magnetically coupled to one or more gear boxes 314 that themselves are magnetically coupled to the motor 312. Details of the magnetic gear boxes 314 and their construction can be found in co-pending PCT Application No. US2023/027358 titled PLANETARY GEARING SYSTEM filed July 11, 2023, the entire contents of which are incorporated herein by reference regarding the description of the features and elements of the gear boxes 314.

[0090] Though not shown in Fig. 21 or Fig. 22, each flywheel 102 also includes one or more generators 318 (see Fig. 7) secured to the motor 312. The rotation of the flywheel 102 is transferred through the gear boxes 314 to the generator 318 to spin the generator 38 and produce electrical energy. By spinning the generator 318, the energy stored in the flywheels 102 is transferred from the mechanical storage in the flywheel 102 to the electrical output of the generator 318. This output can then be used in any manner needed to meet the electrical energy requirements of entities connected to the generator(s). In one example, relevant to the grid-scale flywheel system 500 the generators may be connected to a common bus and provide energy to the bus to which may be connected one or more inverters, converters, transformers, and other electrical energy handling equipment.

[0091] Each of the flywheel assemblies 101 includes a plurality of vibration isolators 400. Each of the vibration isolators 400 may be mounted on a roller 502. In one example, each flywheel 102 and gear box 314 combination and each motor 312 and gear box 314 combination is supported by four vibration isolators 400, each of which includes a roller 502. The rollers 502 mate with rails 504. As shown in Fig. 21, the rails 504 may be formed of pipe (e.g., steel pipe) of a diameter that mates with the rollers 502.

[0092] Though not shown in Fig. 21, mechanical connectors may be secure each of the top plates 118 of the flywheels 102 to connect each flywheel 102 to neighboring flywheels. This mechanical connector may be, for example, a steel bar bolted or otherwise removably affixed to two adjacent flywheels 102. In at least one example, each flywheel 102 is connected to at least two other flywheels 102. The mechanical connector may include one or more elastomeric elements, to limit transfer of vibration between connected flywheels 102. The mechanical connectors can enhance the effects of the vibration isolators 400, by limiting relative movement of the individual flywheel assemblies.

[0093] Another feature not depicted in Fig. 2 is a locking mechanism that rigidly connects the baseplate 110 of each flywheel 102 to the rails 504. Each flywheel 102 may include, for example, a bracket formed of steel or another rigid material. The bracket locks the rollers 502 to the rails 504 to prevent movement of the flywheel 102 relative to the rails 504. As will be appreciated, the rigid connection of the baseplate 110 to the rails 504 will reduce or eliminate the efficacy of the vibration isolators 400, thus, the brackets may be employed selectively at specific times, e.g., during maintenance or set-up of the grid-scale flywheel system 500.

[0094] Figs. 3-6 depict the grid-scale flywheel system 500 incorporated into a 40-foot shipping container 506. The 40-foot shipping container is a standard size and readily available. The floor 508 of the shipping container 500 may be reinforced with a number of cross members 510. The cross-members 510 lay transverse to the long dimension of the 40-foot container 500 and have length of between 8 and 40 feet depending on the dimensions of the dimension of the container 500. The rails 504 may be lain on the cross members 510, and the cross members 510 may be cut or profiled to receive the cross section of the rails 504. The combination of the cross members 510 and the rails 504 forms a grid patten capable of supporting the weight of the grid-scale flywheel system 500, which may exceed 70,000 lbs. far more than what a standard shipping container can support, even when placed on the ground.

[0095] As noted above, the flywheels 102 and motors 312 are mounted via the rollers 502 on the rails 504 and cross members 510. A deck 512 is supported by the cross members 510 and provides for access to the entirety of the 40-foot container 506. Such access may enable maintenance workers to undertake desired maintenance or undertake observation of the components of the grid-scale flywheel system 500. In some instances, the width of the deck 512 is sufficient to satisfy for example the Occupational Health and Safety Administration (OSHA) standards or location health and safety regulations.

[0096] As described herein, each of the flywheels 102or motor 312 along with their respective gear boxes 314 forms a modular unit. These modular units can be easily assembled and made to interoperate with one another, and also be disassembled from one another to allow for service or maintenance. The combination of the rails 504 and the rollers 502 allow for the grid-scale flywheel system 500 to be easily separated into its respective modular units (e.g., the several flywheels 102 and the motors 312). The integration of the modular units into a grid-scale flywheel system 500 provides many advantages. First, the flywheels 102 and the motors 312 may be assembled with their gear boxes 314 at a manufacturing or assembly facility and then brought to a location where the 40-foot container 506 has been placed. The flywheels 102 and the motors 312 can then be rolled onto the rails 504 to form the grid-scale flywheel system 500. This may be further enabled with the skids 304 and rails 308 of Figs. 5-11.

[0097] Second, where the gear boxes 314 are magnetic gear boxes, little to no additional set-up other than placement in close proximity to one another is required. Once placed sufficiently close to neighboring magnetic gear boxes 314, the magnetic gears will couple such that rotation of the gears of one gear box 314 will transfer to cause the rotation of the gears of neighboring gear boxes 314. Thus, by placing multiple flywheel 102 and their respective gear boxes 314 in proximity to a motor 312 and its gear box 314, the grid-scale flywheel system 500 is fully assembled, requiring just connection of electrical cabling for the motor 312 and the generators 318 to place the grid-scale flywheel system 500 into service, with little down time of the grid-scale flywheel system 500.

[0098] In this same manner, the assemblies of the grid-scale flywheel system 500 can be separated and where one or more of the assemblies requires maintenance the entire assembly (e.g., flywheel 102 and gear box 314 or motor 312 and gear box 314) may be removed and replaced by a corresponding assembly. The grid-scale flywheel system 500 may then be returned to service and the component requiring assembly can then be returned to the manufacturing or assembly facility for refurbishment.

[0099] Furthermore, because each flywheel 102 may weigh in excess of 8,000 lbs. a 40-foot container 506 with 18 or 20 such flywheels 102, along with their respective motors 312would be too heavy for travel on most public roadways. Forming the grid-scale flywheel system 500 of many smaller modular units allows for the use of smaller and more maneuverable equipment may be employed for the installation. Indeed, for assembly of the grid-scale flywheel system 500 from these modular units may only require a truck rated to the appropriate weight for the modular unit and a forklift also rated to the appropriate weight for the modular unit. The forklift can remove the modular unit from the truck and place the modular unit on the rails 504. The rollers 502 allow the modular unit to be rolled into place within the 40-foot container 506 to assemble the grid-scale flywheel system 500.

[0100] Other aspects of the 40-foot container 506 are access doors 514 which enable secured access to the grid-scale flywheel system 500. As will be appreciated, and as described herein, multiple 40-foot containers 506 and grid-scale flywheel systems 500 can be used in combination to provide adequate energy storage for a given application.

[0101] As noted above, the modular approach and production of standard capacity flywheels 102, gear boxes 314, and motors 312 allow for the capacity of the grid-scale flywheel system 500 to be altered as needed for a particular application. The modular approach facilitates assembly of the grid-scale flywheel system 500 from smaller and more easily handled components that can be transported to and maneuvered into position using common materials handling equipment (e.g., light panel trucks and fork-lifts). In this manner the grid-scale flywheel system 500 can be custom built for a given application from these modular components. Further, the grid-scale flywheel system 500 can be disassembled quickly and easily based on the flywheels 102resting on rollers 502 supported on the rails 504. Thus, in the event of a need to replace a flywheel 102 or motor 312, the grid-scale flywheel system 500 can be rolled out of the container 506 onto temporary extension rails (not shown). If the component being replaced is in, for example, the middle of the grid-scale flywheel system 500, only those motors 312 and flywheels 102 that need to be rolled out on the temporary extension rolls need be moved to allow for the component in need of replacement to be accessed and removed. A replacement may then be quickly installed on the rails 504 and the entirety can then be rolled back into the container 506 and the grid-scale flywheel system 500 can be placed back in service with limited time out of service.

[0102] The modular approach, as described herein, also reduces the number of components that need be manufactured or assembled for the creation of the grid-scale flywheel system 500. This reduction in components promotes efficient manufacturing. The sizing of the flywheel assembly 101 (e.g., 25 or 50 kW-hr) provides the flexibility in sizing of the capacity of the grid-scale flywheel system without requiring the manufacture and assembly of multiple sizes of flywheel assemblies for each application.

EXAMPLES

This disclosure is further described in the following examples.

1. A seismic wave mitigation system comprising;

    a frame member having a generally U-shaped configuration and including a pair of vertical arms and a cross member;

    a plurality of pendulum springs connected to the frame member at a first end;

    a base configured to support a flywheel system, the plurality of pendulum springs connected to the base on a second end; and an elastomeric pad, wherein the plurality of pendulum springs suspends the base and the flywheel system above the elastomeric pad, the elastomeric pad is configured to limit vertical movement of the base as a result of seismic wave.

2. The seismic wave mitigation system of example 1, where the plurality of pendulum springs suspends the base 1/16th of an inch to ½ and inch above the elastomeric pad.
3. The seismic wave mitigation system of any of the preceding examples, further comprising a plurality of magnets mounted on the base and a corresponding plurality of magnets associated with the elastomeric pad.
4. The seismic wave mitigation system of example 3, wherein the plurality of magnets associated with the elastomeric pad repel the plurality of magnets mounted on the base.
5. The seismic wave mitigation system of example 3, wherein the plurality of magnets associated with the elastomeric pad attract the plurality of magnets mounted on the base.
6. The seismic wave mitigation system of example 3, wherein a first portion of the plurality of magnets associated with the elastomeric pad are in attraction with a first portion of the magnets mounted on the base.
7. The seismic wave mitigation system of example 3, wherein a second portion of the plurality of magnets associated with the elastomeric pad repel a second portion of the magnets mounted on the base.
8. The seismic wave mitigation system of any of the preceding examples, wherein the base is formed of steel.
9. The seismic wave mitigation system of any of the preceding examples, wherein the frame member is formed of steel and has an I-beam, C-channel, rectangular cross-section.

10. The seismic wave mitigation system of any of the preceding examples, comprising a plurality of frame members connecting pendulum springs to the base.
11. An isolation damper comprising:

    two halves, each half including,

        a rigid flange;

        a pair of band clamps secured to the rigid flange and extending away from the rigid flange;

        a floating plate suspended between and secured to the pair of band clamps; and

    a connector secured to the floating plate of each half and securing the two halves to one another.
12. The isolation damper of example 11, wherein the rigid flange of each half includes first holes configured to receive fasteners to secure the half to a foundation or to machinery.
13. The isolation damper of example 12, wherein the machinery is a flywheel.
14. The isolation damper of any of claims 11 through 13, wherein the rigid flange of each half includes second holes, and the floating plate of each half includes third holes, wherein the second holes and the third holes are aligned to allow for passage of a fastener therethrough.
15. The isolation damper of example 14, further comprising lumens formed in the connector, wherein the lumens are aligned with the second and third holes of each half and allow for passage of fasteners therethrough.

16. The isolation damper of example 15, wherein the fasteners secure the floating plate of each half to the connector, and the second holes formed in the rigid flange provide access to the fasteners.
17. The isolation damper of any of claims 11-16, wherein the band springs have a single fold construction.
18. The isolation damper of example 17, further comprising at least one snubber shaped to be received in the fold of the band springs of each half.
19. The isolation damper of example 18, wherein the at least one snubber is formed of rubber, foam, or another plastic material.
20. The isolation damper of any of examples 11-19, wherein the band springs have a double fold construction.
21. The isolation damper of example 20, further comprising at least one snubber shaped to be received in at least one fold of each band spring of each half.
22. The isolation damper of any of examples 11-21, wherein the band springs have a no fold hoop construction.
23. The isolation damper of any of examples 11-22, wherein the connector is formed of a polymeric material.
24. The isolation damper of any of examples 11-23, wherein the rigid flange, a pair of band clamps, and floating plate of each half are individually cut from plate material and welded together.
25. The isolation damper of example 24, wherein the plate material is a steel.
26. The isolation damper of example 25, wherein the steel is an AR-400 steel.
27. A flywheel assembly comprising:

a flywheel having a mass of between 4000 lbs. and 20,000 lbs. and configured to rotate at between 5000 and 15,000 RPM;

a plurality of isolation dampers placed to support the flywheel, wherein each isolation damper includes:

two halves, each half having,

a rigid flange;

a pair of band clamps secured to the rigid flange and extending away from the rigid flange;

a floating plate suspended between and secured to the pair of band clamps; and

a connector secured to the floating plate of each half and securing the two halves to one another.

28. The flywheel assembly of example 27, wherein the band springs have a single fold construction.
29. The flywheel assembly of example 27 or 28, further comprising at least one snubber shaped to be received in at least one fold of each band spring.
30. The flywheel assembly of any of examples 27-29, further comprising fasteners configured to secure the floating plate of each half to the connector of each isolation damper
31. A grid-scale flywheel assembly comprising:

a plurality of flywheel assemblies, each flywheel assembly including a gear box;

a plurality of motors, each motor including a gear box configured to mate with and drive the gear boxes of two or more of the plurality of flywheel assemblies; and a plurality of rails, wherein the plurality of motors and plurality of flywheel assemblies are configured to translate on the plurality of rails.

32. The grid-scale flywheel assembly of example 31, wherein each of the plurality of flywheel assemblies are rated at 25 kW-hr of energy storage.
33. The grid-scale flywheel assembly of any of examples 31-32, wherein each of the plurality of flywheel assemblies includes one or more vibration isolators.
34. The grid scale flywheel assembly of any of examples 31-33, wherein each of the plurality of flywheel assemblies include a plurality of rollers.
35. The grid scale flywheel assembly of example 34, wherein the plurality of rollers are configured to mate with the plurality of rails.
36. The grid scale flywheel assembly of any of examples 31-35, further comprising a container configured to store the plurality of flywheel assemblies and plurality of motors.
37. The grid scale flywheel assembly of example 36, further comprising a plurality of crossmembers, wherein the plurality of crossmember are oriented transverse to and support the plurality of rails.
38. The grid scale flywheel assembly of example 37, wherein the plurality of crossmembers are profiled to receive the plurality of rails.
39. The grid scale flywheel assembly of example 37, further comprising a deck supported by the crossmembers, the deck providing access to the plurality of flywheel assemblies and plurality of motors.
40. The grid scale flywheel assembly of example 37, further comprising a least one door configured to secure the plurality of flywheel assemblies and plurality of motors within the container.

41. The grid scale flywheel assembly of any of examples 31-40, wherein each of the plurality of flywheel assemblies include a magnetic lift bearing.
42. The grid scale flywheel assembly of example 41, wherein each of the plurality of flywheel assemblies including a magnetic levitating bearing, wherein the combination of the magnetic lift bearing and the magnetic levitating bearing substantially eliminates friction within each of the plurality of flywheel assemblies.
43. The grid scale flywheel assembly of any of examples 31-42, wherein the gear box associated with each of the plurality of motors is a magnetic gear box and the gear box associated with each of the plurality of flywheel assemblies is a magnetic gear box.
44. The grid scale flywheel assembly of example 43, wherein the magnetic gear box of each of the plurality of motors mates with a drives a subset of the magnetic gear boxes associated with the plurality of flywheel assemblies.
45. The grid scale flywheel assembly of example 44, wherein the gear box of each of the plurality of motors mates with and directly drives the magnetic gear boxes associated at least three of the plurality of flywheel assemblies.
46. The grid scale flywheel assembly of example 44, wherein the gear box of each of the plurality of motors indirectly drives the magnetic gear boxes associated with at least three of the plurality of flywheel assemblies.
47. The grid scale flywheel assembly of any of examples 31-46, further comprising an energy source connected to the plurality of motors, wherein the energy source is one or more of a solar energy source, a wind power source, or a grid power source.

48. The grid scale flywheel assembly of any of examples 31-47, further comprising a plurality of generators, each generator operatively coupled to the gear box associated with one or more of the plurality of flywheels.

49. The grid scale flywheel assembly of example 48, wherein the plurality of generators is coupled to the grid, wherein upon demand energy stored in the plurality of flywheel assemblies is converted to electrical energy and supplied to the grid.

50. A grid-scale flywheel assembly comprising:

a plurality of flywheel assemblies, each flywheel assembly including a magnetic gear box;

a plurality of motors, each motor including a magnetic gear box configured to mate with and drive the magnetic gear boxes of two or more of the plurality of flywheel assemblies;

a plurality of rails, wherein the plurality of motors and plurality of flywheel assemblies are configured to translate on the plurality of rails;

a container configured to receive the plurality of flywheel assemblies and the plurality of motors on the plurality of rails, the plurality rails supported by a plurality of crossmembers, wherein the plurality of crossmembers are profiled to receive the plurality of rails;

a deck supported by the plurality of crossmembers and configured to provide access to the plurality of flywheel assemblies and plurality of motors;

a plurality of rollers associated with each of the plurality of flywheel assemblies and plurality of motors, wherein the plurality of rollers are in rolling engagement with the plurality of rails; and a plurality of vibration isolators associated with each of the plurality of flywheel assemblies and plurality of motors.

51. A seismic wave mitigation system comprising;

a skid;

a plurality of rods extending from the skid;

a flywheel including a top plate and a base plate, the flywheel suspended by the rods; and

a plurality of magnetic dampers, each magnetic dampers comprised of two halves, a first half secured to the base plate, and a second half secured to a surface opposite the base plate, wherein the magnetic dampers are configured to arrest movement of the flywheel.

52. The seismic mitigation system of example 1, wherein the skid includes a plurality of rollers configured to traverse a rail.
53. The seismic mitigation system of example 2, further comprising a container, wherein the rail is secured to a ceiling of the container.
54. The seismic mitigation system of example 3, further comprising a plurality of travel stop limiters.
55. The seismic mitigation system of example 4, further comprising a plurality of pockets formed in a floor of the container.
56. The seismic mitigation system of any of examples 51-55, wherein the flywheel is suspended such that the two halves of the magnetic dampers are separated by gap.
57. The seismic mitigation system of example 56, wherein each half of the magnetic dampers including magnetic elements which both attract and repel one another.

58. The seismic mitigation system of any of examples 51-57, further comprising a height levelers secured to the skid.
59. The seismic mitigation system of any of examples 51-58, further comprising a plurality attachment assemblies connected to an exterior of the flywheel.
60. The seismic mitigation system of claim 59, wherein the rod is secured to the attachment assembly to suspend the flywheel.
61. The seismic mitigation system of claim 59, further comprising a cantilever rod secured on one end to the attachment assembly.
62. The seismic mitigation system of claim 61, wherein a second end of the cantilever rod is secured to a base.
63. The seismic mitigation system of claim 62, further comprising a plurality of tabs connected to the base, wherein the tabs are configured to receive the cantilever rods.
64. The seismic mitigation system of any of examples 51-63, further comprising a plurality of isolation dampers.

It will be understood that various modifications may be made to the embodiments of the presently disclosed renewable energy generation systems. Therefore, the above description should not be construed as limiting, but merely as exemplifications of embodiments. Those skilled in the art will envision other modifications within the scope and spirit of the present disclosure.

We claim:

1. A seismic wave mitigation system comprising;

   a skid;

   a plurality of rods extending from the skid;

   a flywheel including a top plate and a base plate, the flywheel suspended by the rods; and

   a plurality of magnetic dampers, each magnetic dampers comprised of two halves, a first half secured to the base plate, and a second half secured to a surface opposite the base plate, wherein the magnetic dampers are configured to arrest movement of the flywheel.
2. The seismic mitigation system of claim 1, wherein the skid includes a plurality of rollers configured to traverse a rail.
3. The seismic mitigation system of claim 2, further comprising a container, wherein the rail is secured to a ceiling of the container.
4. The seismic mitigation system of claim 3, further comprising a plurality of travel stop limiters.
5. The seismic mitigation system of claim 4, further comprising a plurality of pockets formed in a floor of the container.
6. The seismic mitigation system of claim 1, wherein the flywheel is suspended such that the two halves of the magnetic dampers are separated by gap.
7. The seismic mitigation system of claim 6, wherein each half of the magnetic dampers including magnetic elements which both attract and repel one another.

8. The seismic mitigation system of claim 1, further comprising a height levelers secured to the skid.

9. The seismic mitigation system of claim 1, further comprising a plurality attachment assemblies connected to an exterior of the flywheel.

10. The seismic mitigation system of claim 9, wherein the rod is secured to the attachment assembly to suspend the flywheel.

11. The seismic mitigation system of claim 9, further comprising a cantilever rod secured on one end to the attachment assembly.

12. The seismic mitigation system of claim 11, wherein a second end of the cantilever rod is secured to a base.

13. The seismic mitigation system of claim 12, further comprising a plurality of tabs connected to the base, wherein the tabs are configured to receive the cantilever rods.

14. The seismic mitigation system of claim 1, further comprising a plurality of isolation dampers.

15. A seismic wave mitigation system comprising;

a frame member having a generally U-shaped configuration and including a pair of vertical arms and a cross member;

a plurality of pendulum springs connected to the frame member at a first end;

a base configured to support a flywheel system, the plurality of pendulum springs connected to the base on a second end; and

an elastomeric pad, wherein the plurality of pendulum springs suspends the base and the flywheel system above the elastomeric pad, the elastomeric pad is configured to limit vertical movement of the base as a result of seismic wave.

16. The seismic wave mitigation system of claim 15, further comprising a plurality of magnets mounted on the base and a corresponding plurality of magnets associated with the elastomeric pad.
17. The seismic wave mitigation system of claim 16, wherein the plurality of magnets associated with the elastomeric pad repel the plurality of magnets mounted on the base.
18. The seismic wave mitigation system of claim 16, wherein the plurality of magnets associated with the elastomeric pad attract the plurality of magnets mounted on the base.
19. The seismic wave mitigation system of claim 16, wherein a first portion of the plurality of magnets associated with the elastomeric pad are in attraction with a first portion of the magnets mounted on the base.
20. The seismic wave mitigation system of claim 16, wherein a second portion of the plurality of magnets associated with the elastomeric pad repel a second portion of the magnets mounted on the base.

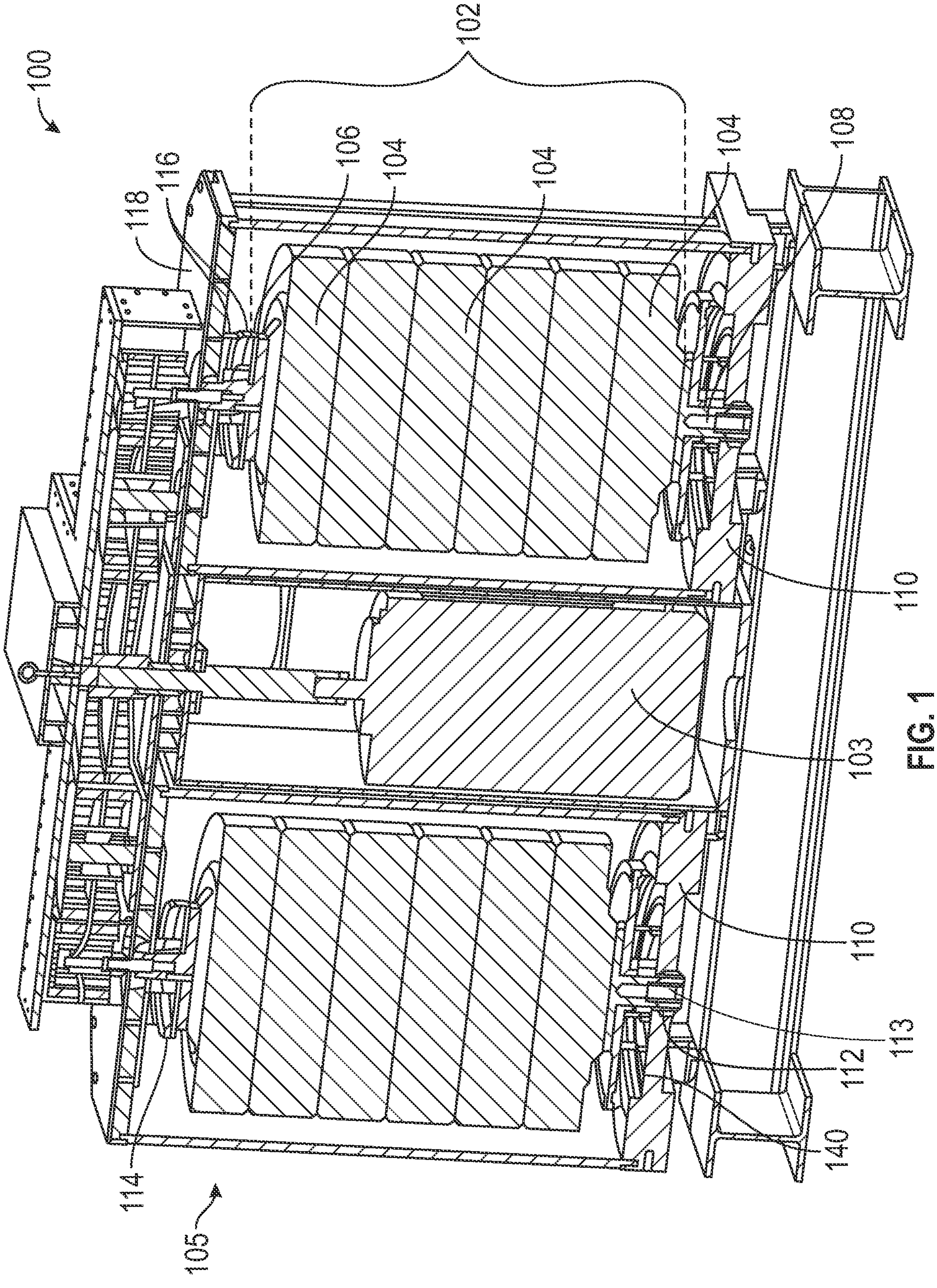
100
102
106
104
104
104
108
118
116
110
103
110
113
112
140
114
105

FIG. 1

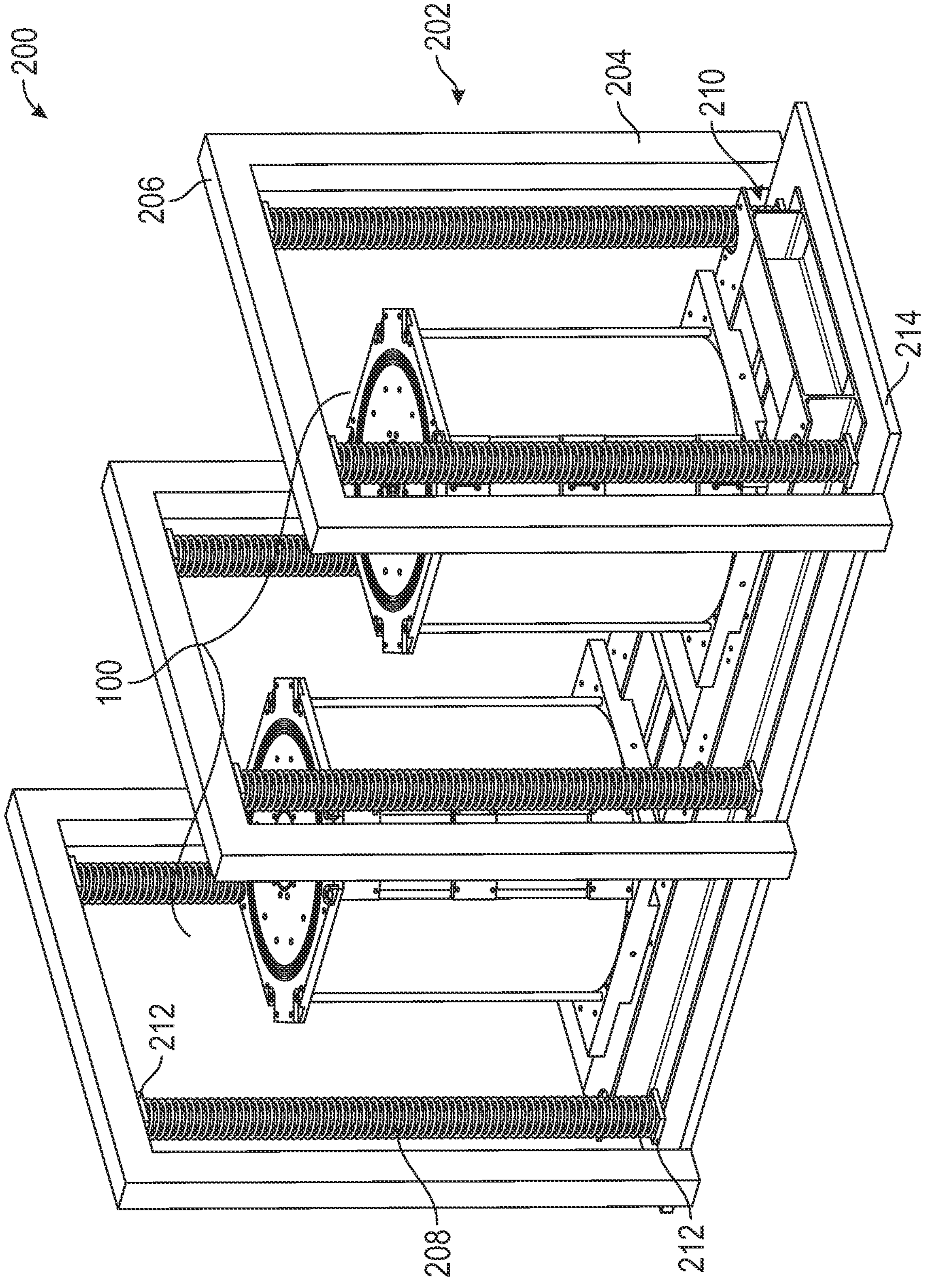

FIG. 2

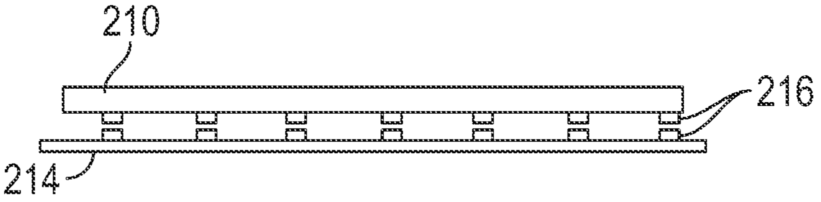

FIG. 3

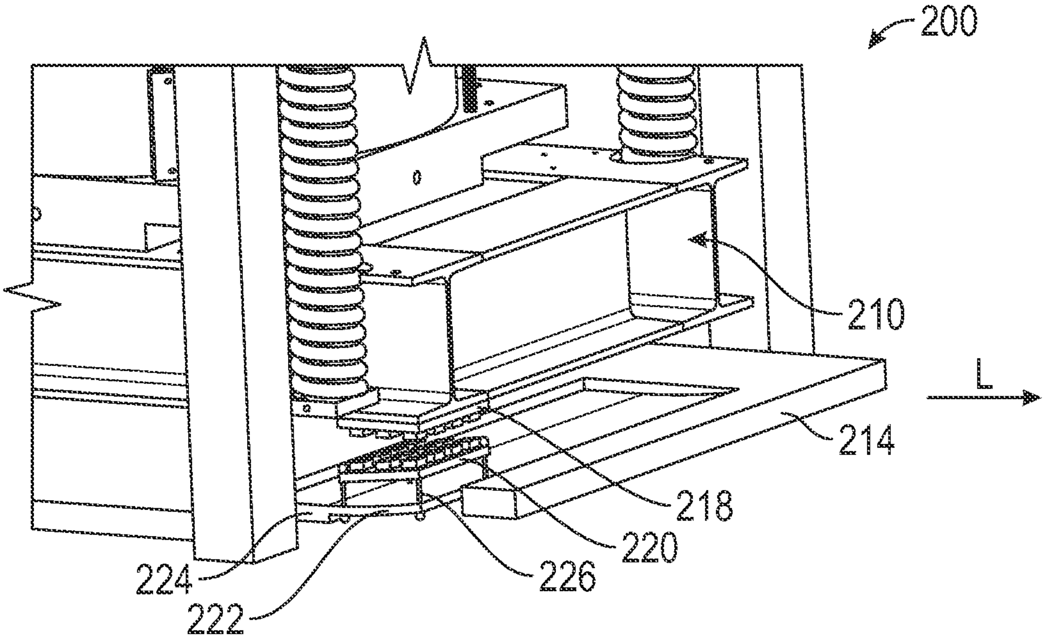

FIG. 4

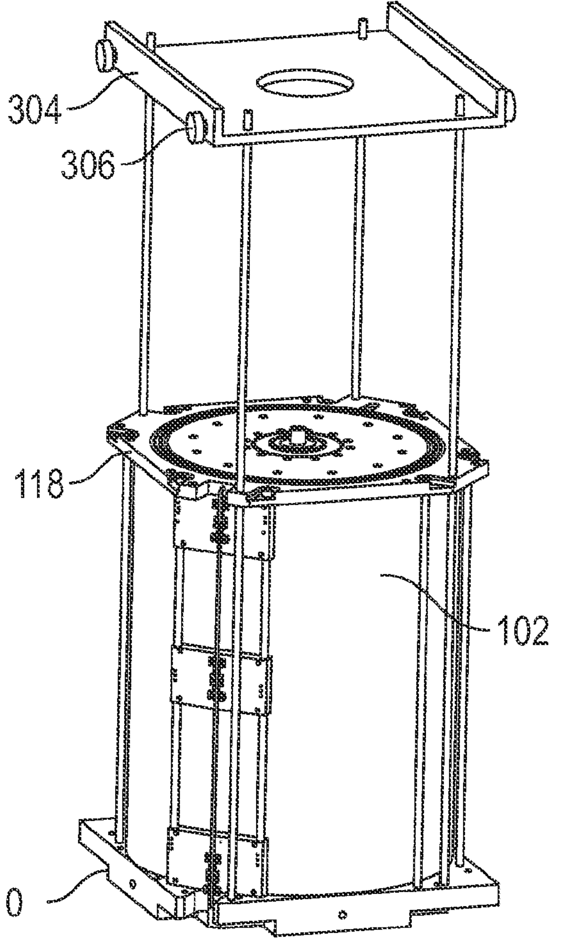

FIG. 5

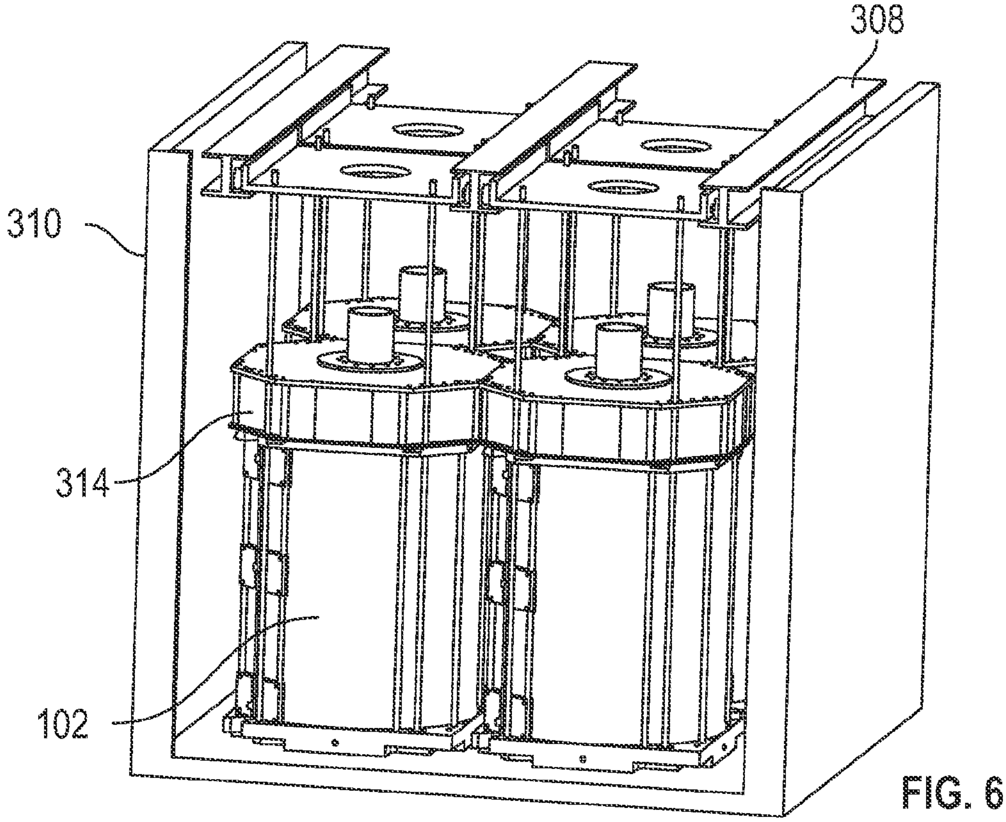

FIG. 6

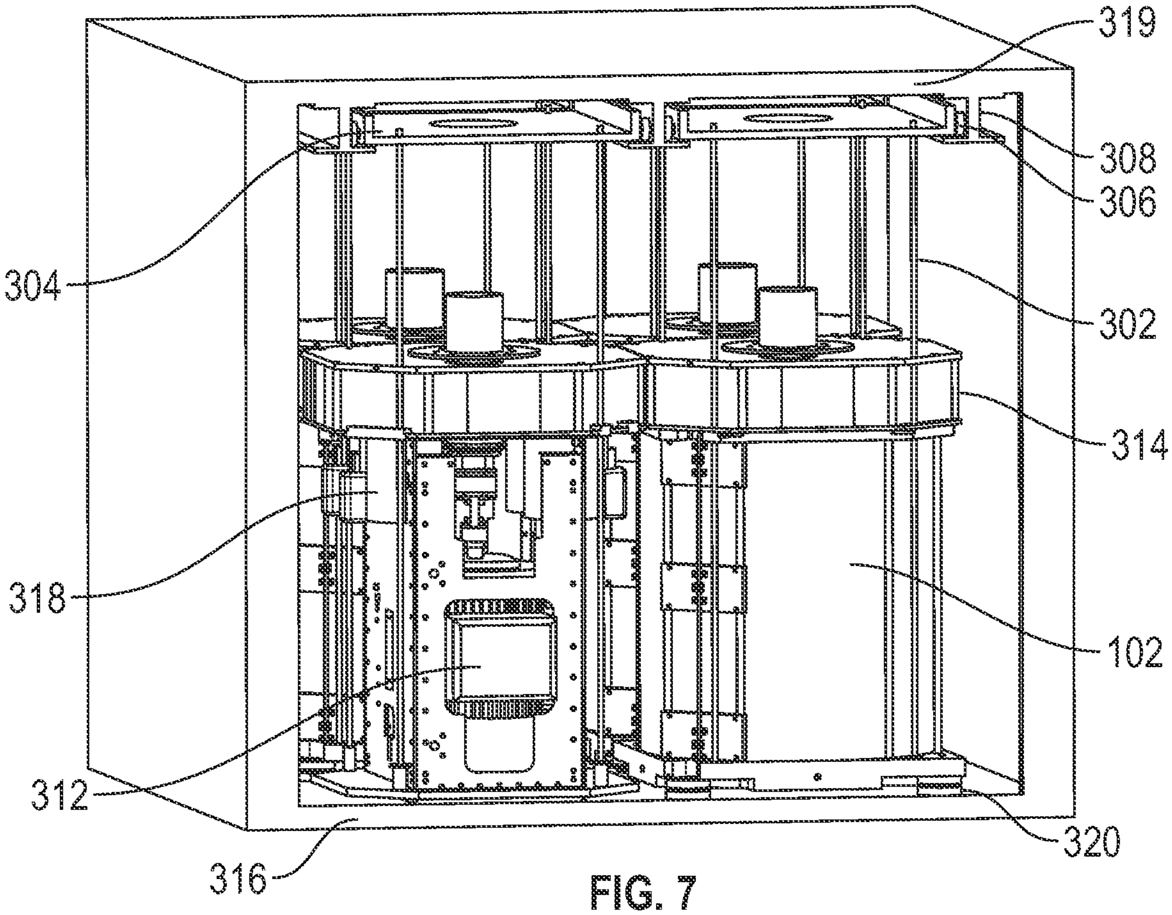
319
308
306
304
302
314
318
102
312
320
316

FIG. 7

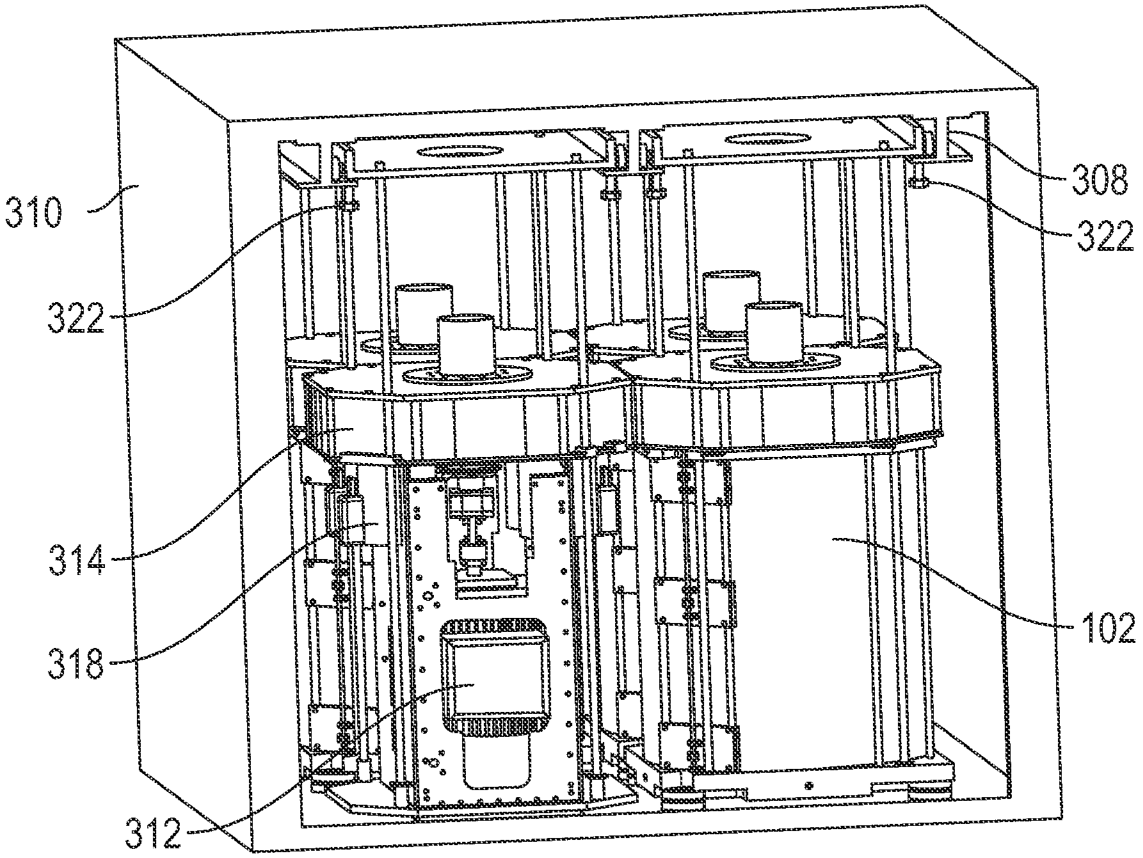
310
308
322
322
314
318
102
312

FIG. 8

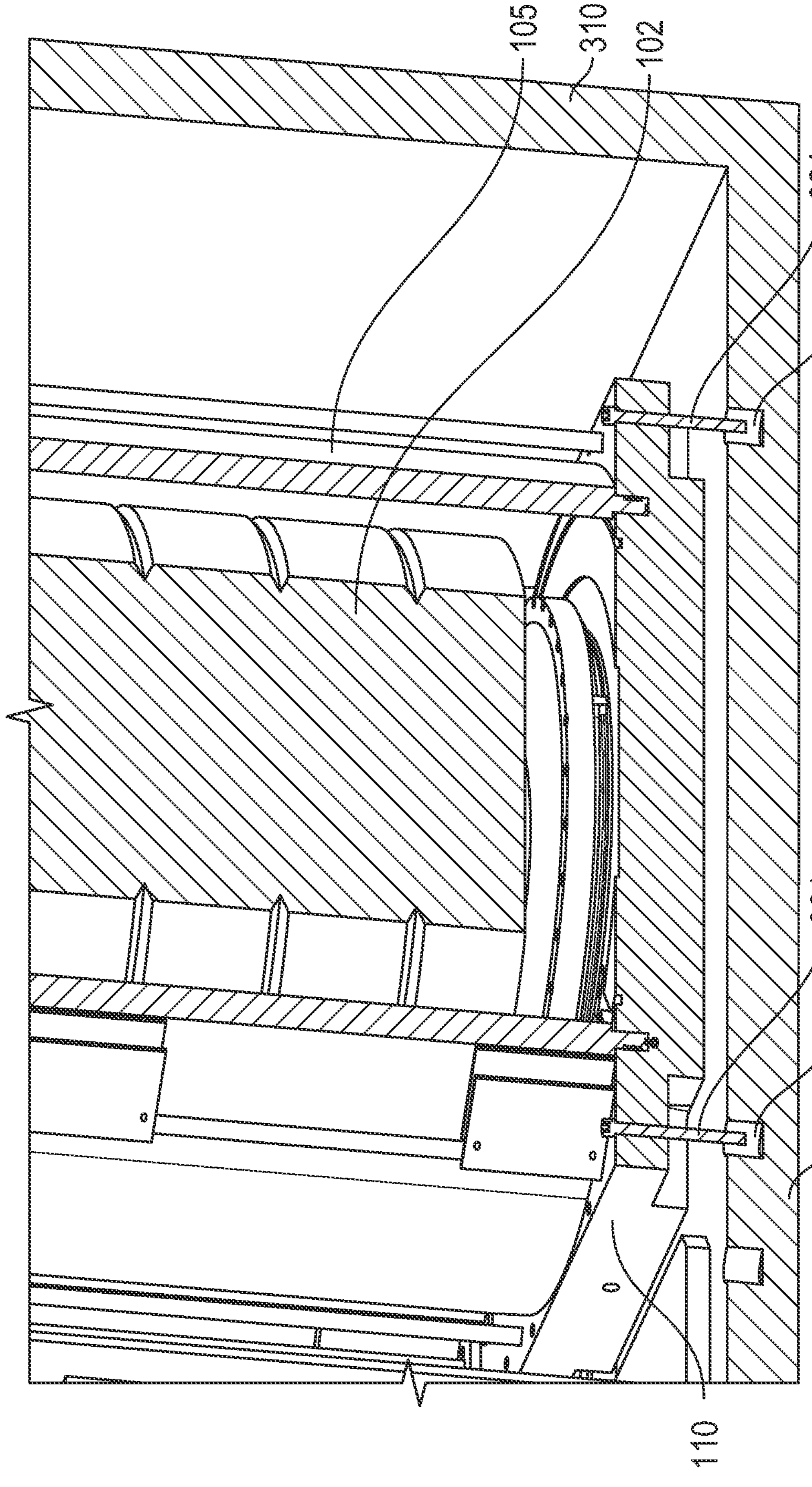

FIG. 9

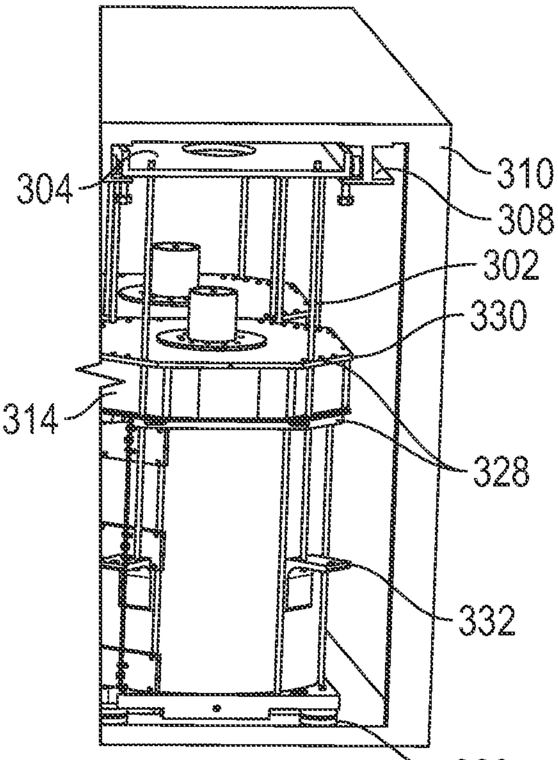
304
310
308
302
330
314
328
332
320

FIG. 10

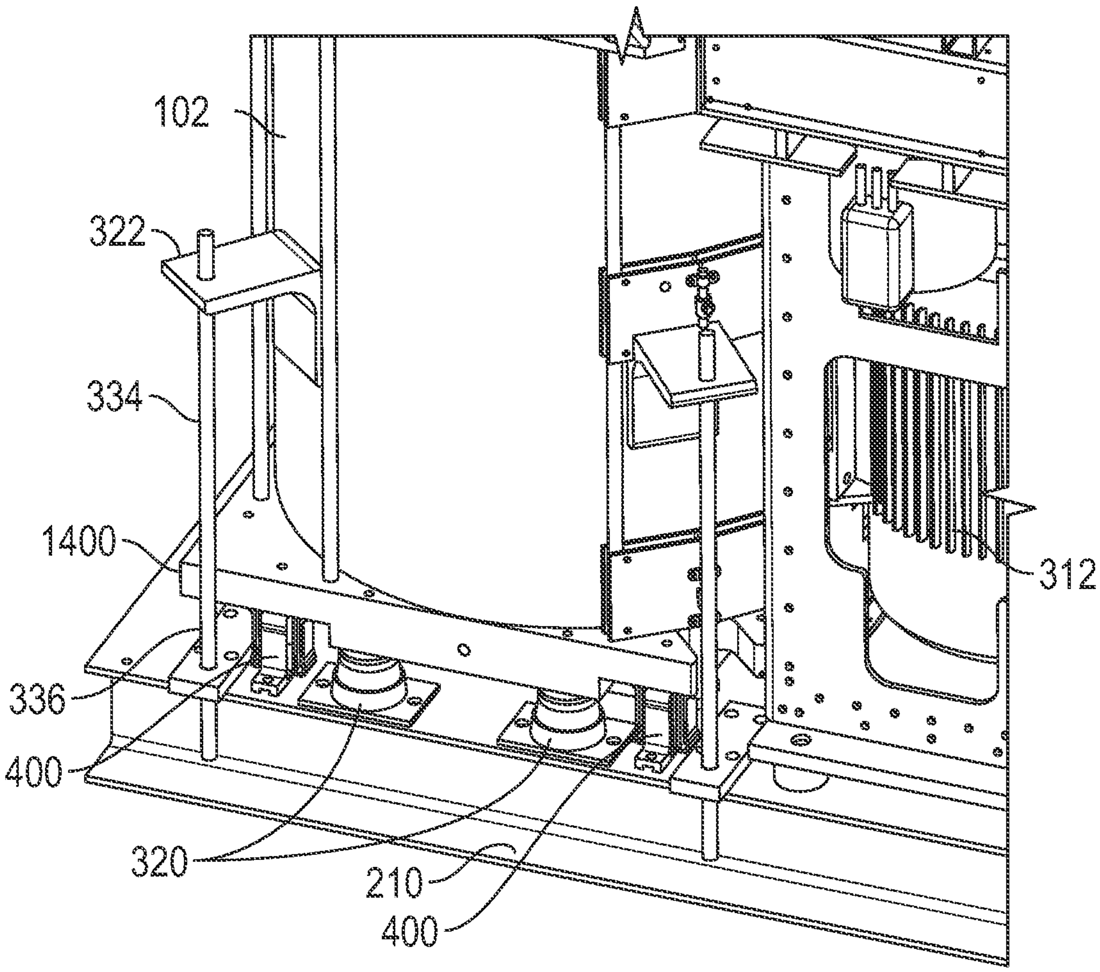
102
322
334
1400
336
400
320
210
400
312

FIG. 11

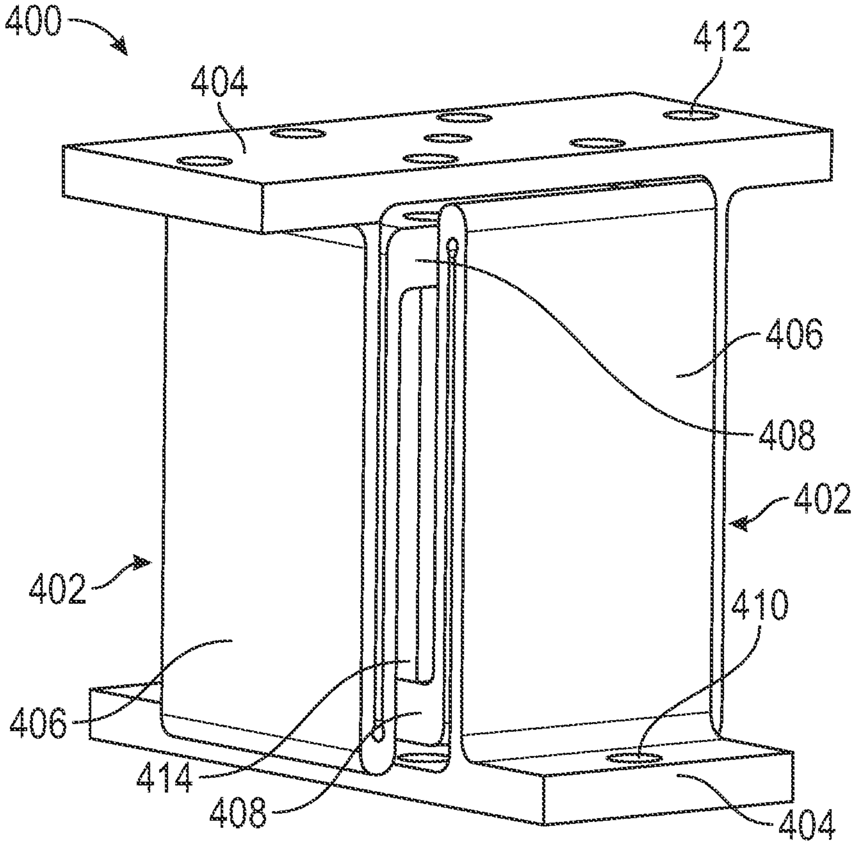
400
404
412
406
408
402
402
410
406
414
408
404

FIG. 12

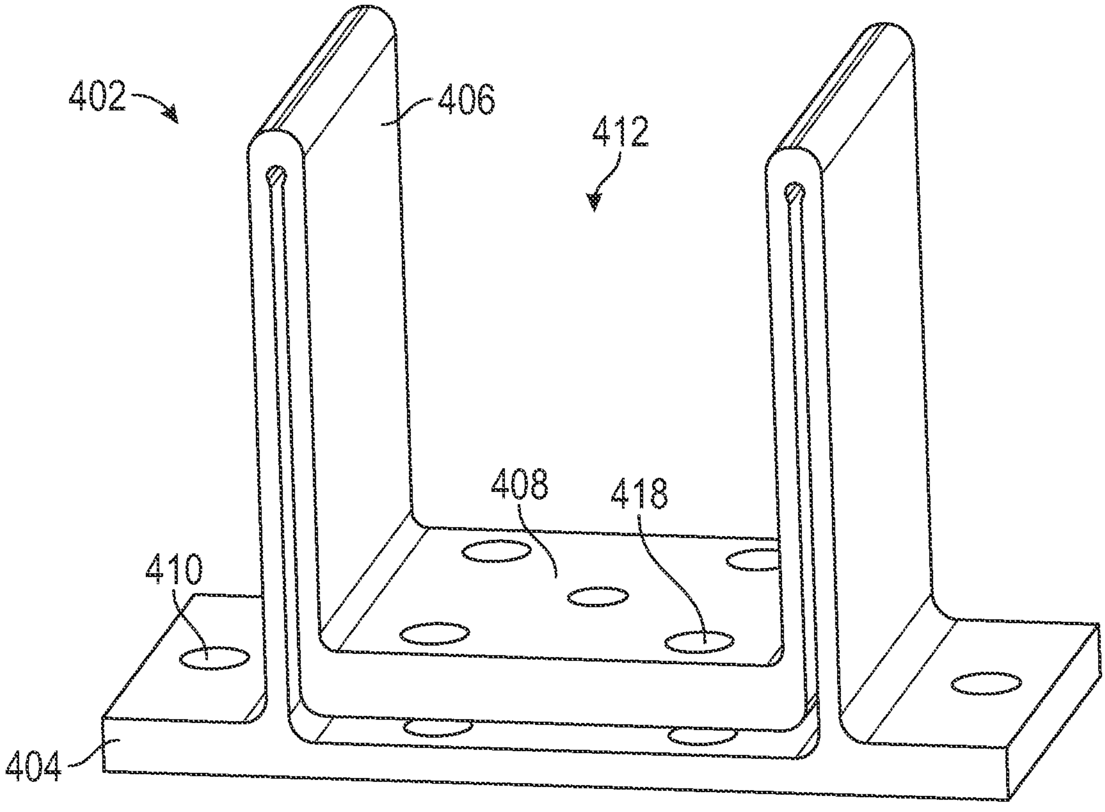
402
406
412
408
418
410
404

FIG. 13

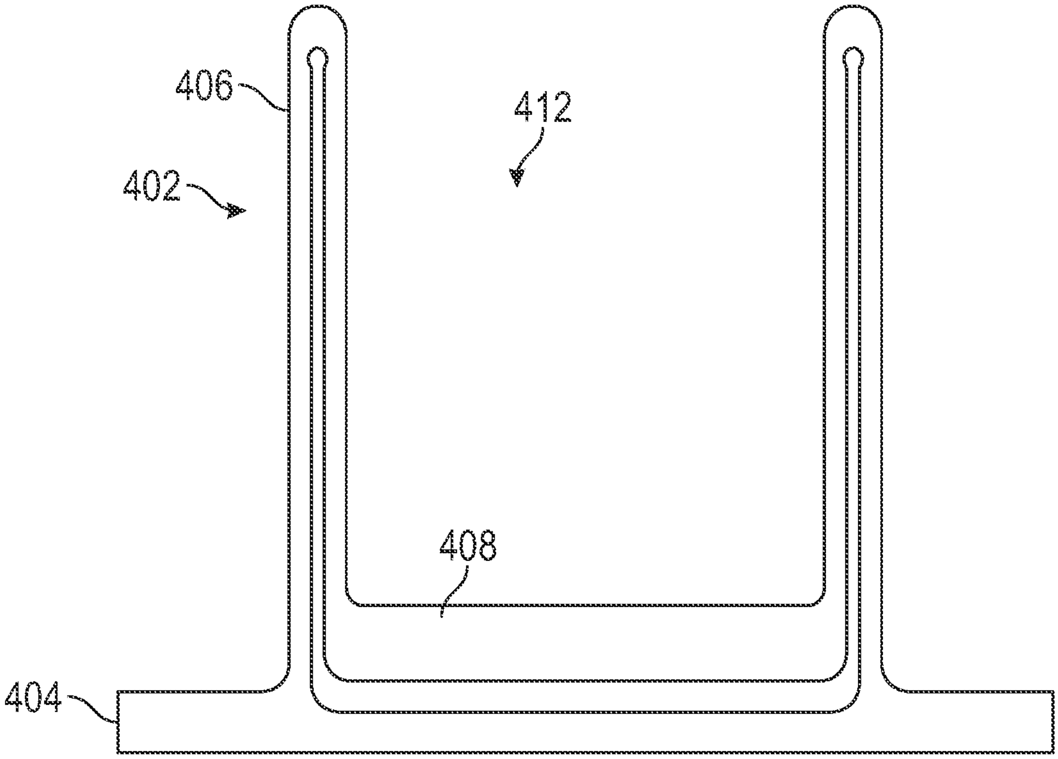

FIG. 14

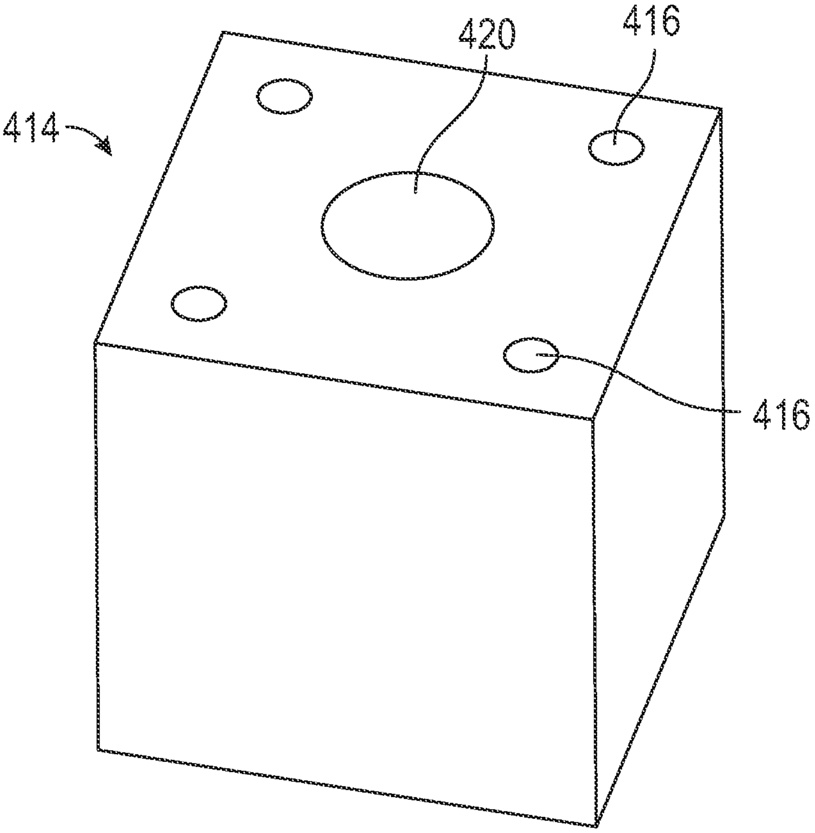

FIG. 15

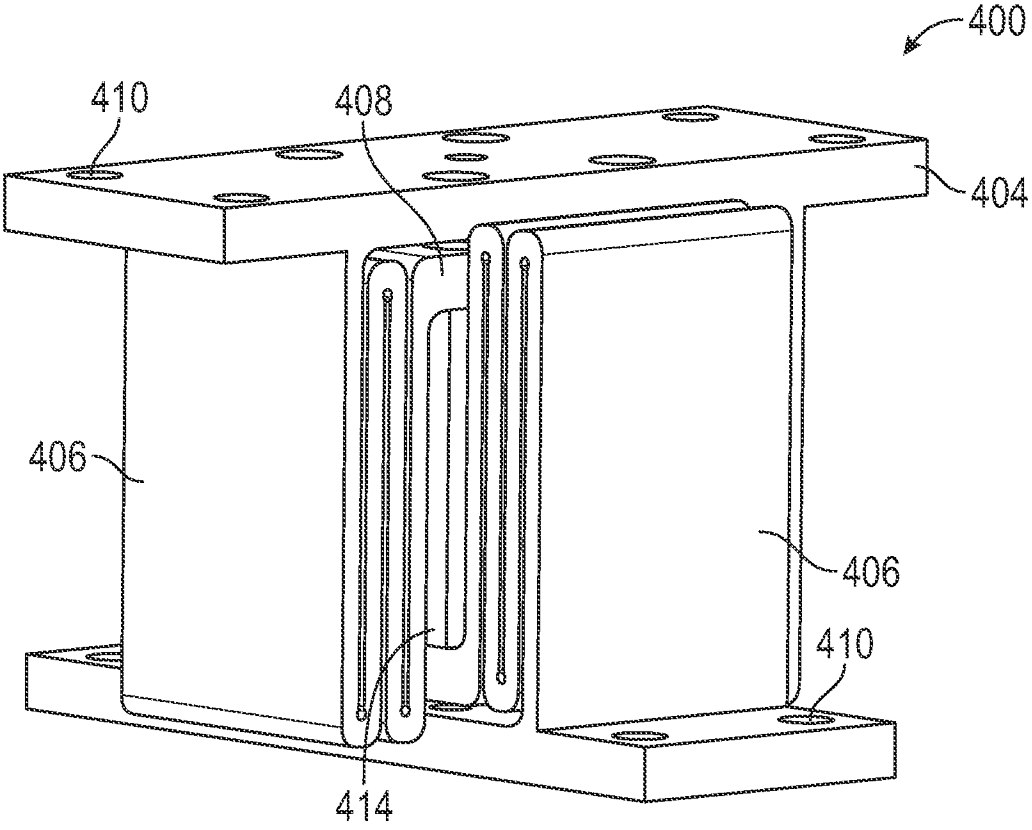

FIG. 16

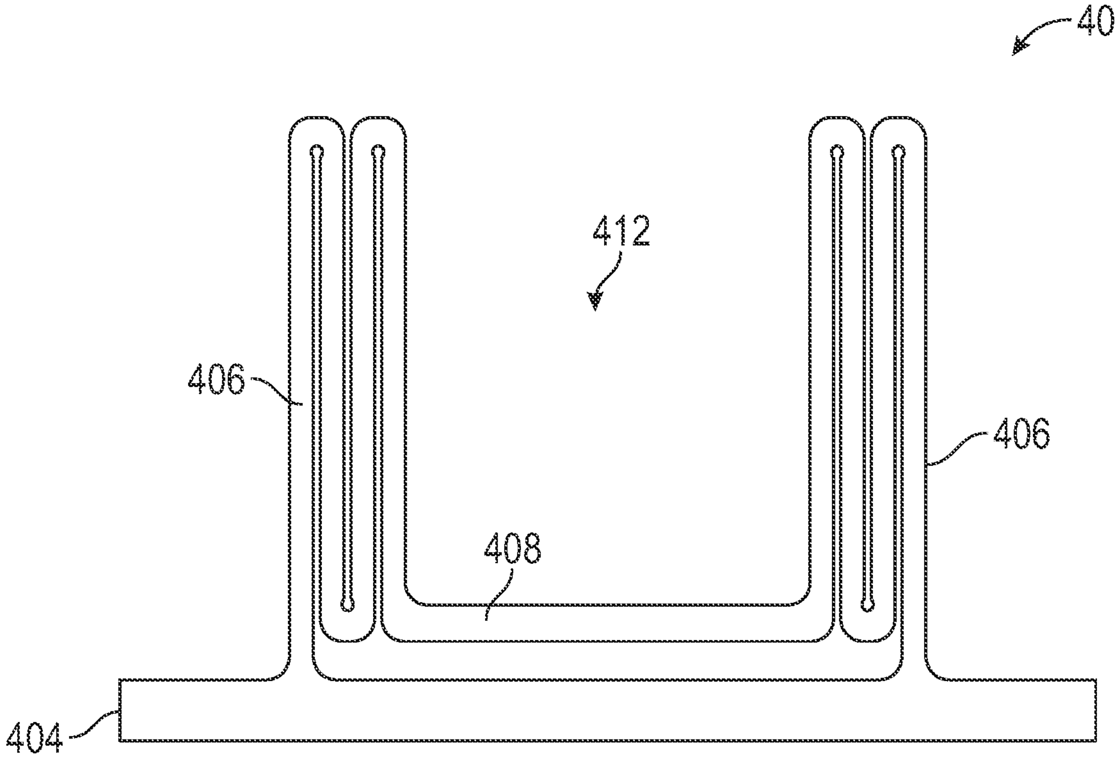

FIG. 17

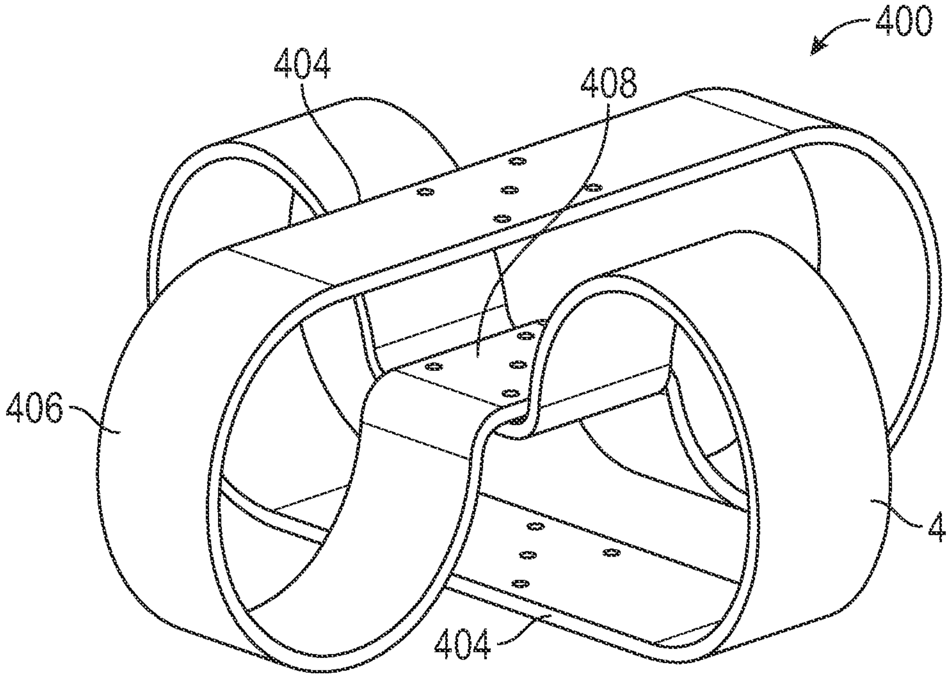

FIG. 18

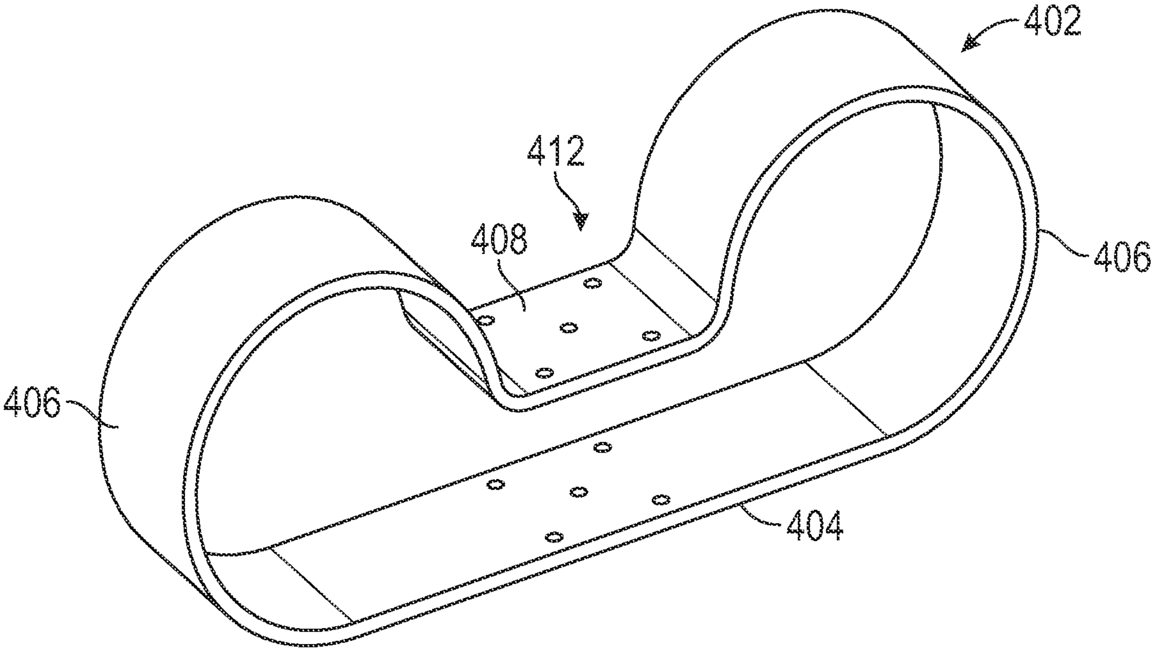

FIG. 19

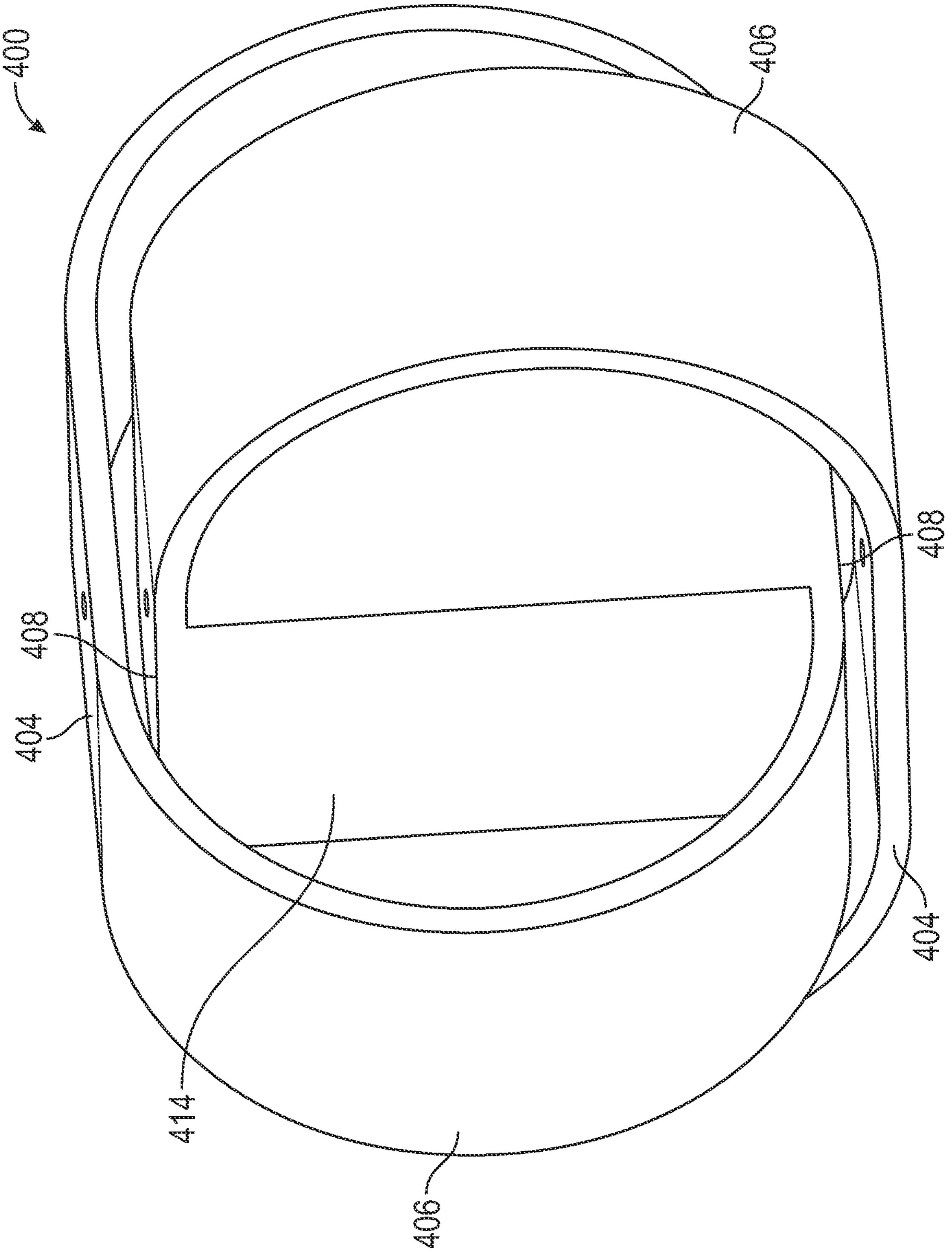

FIG. 20

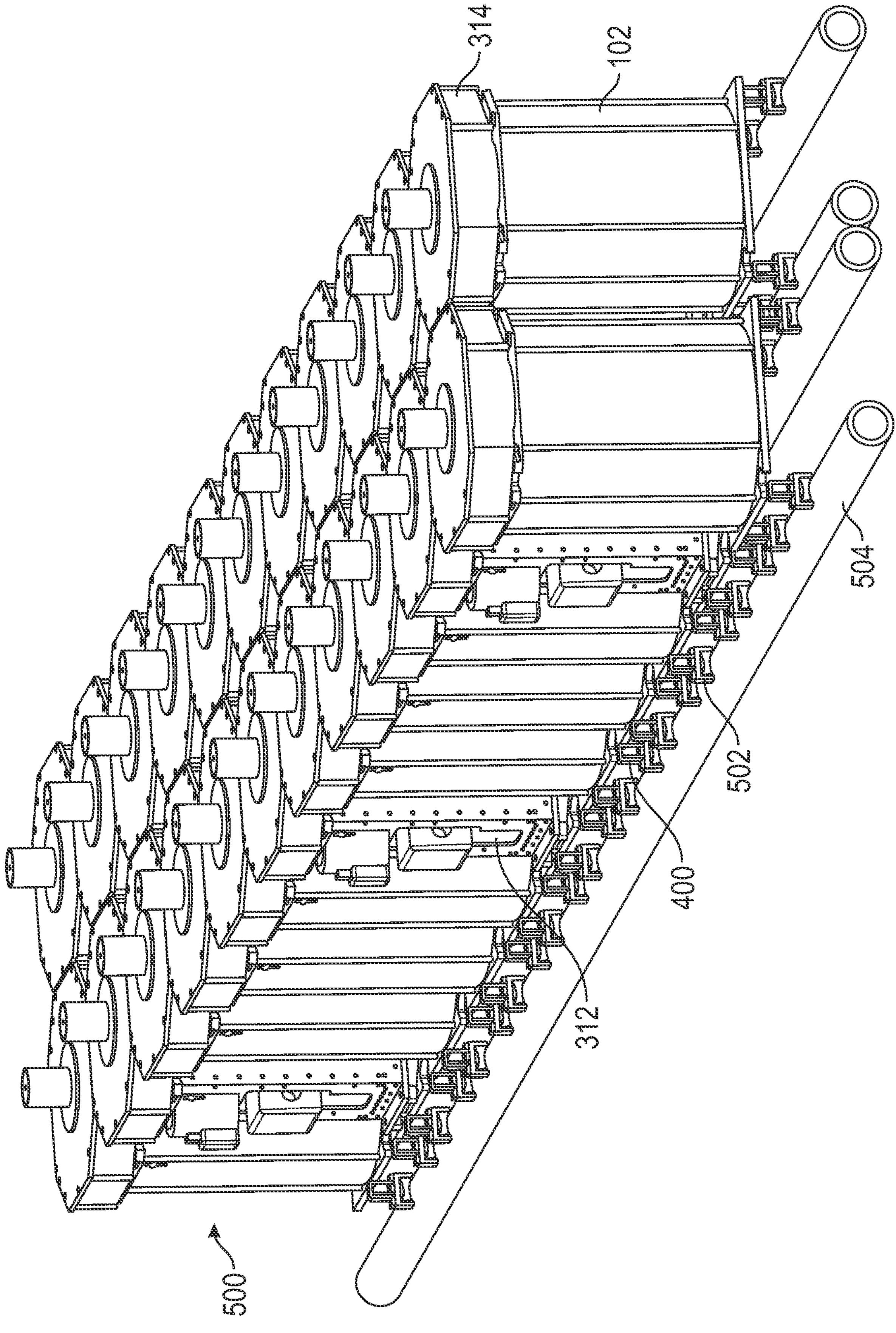

FIG. 21

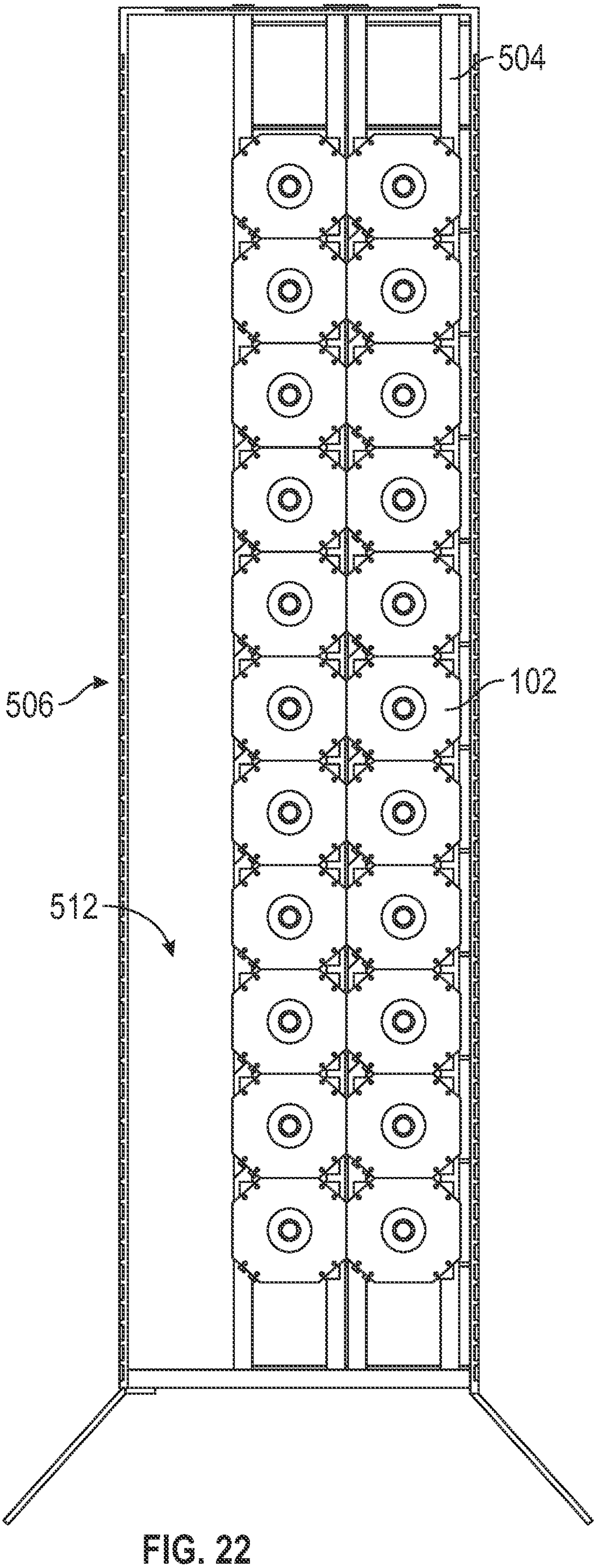

FIG. 22

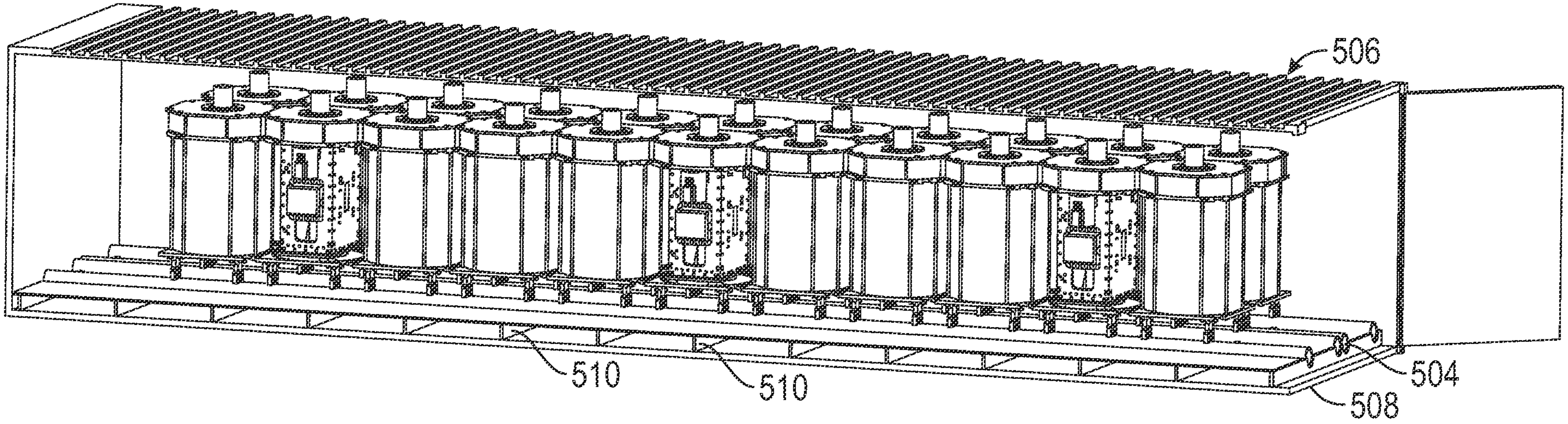

FIG. 23

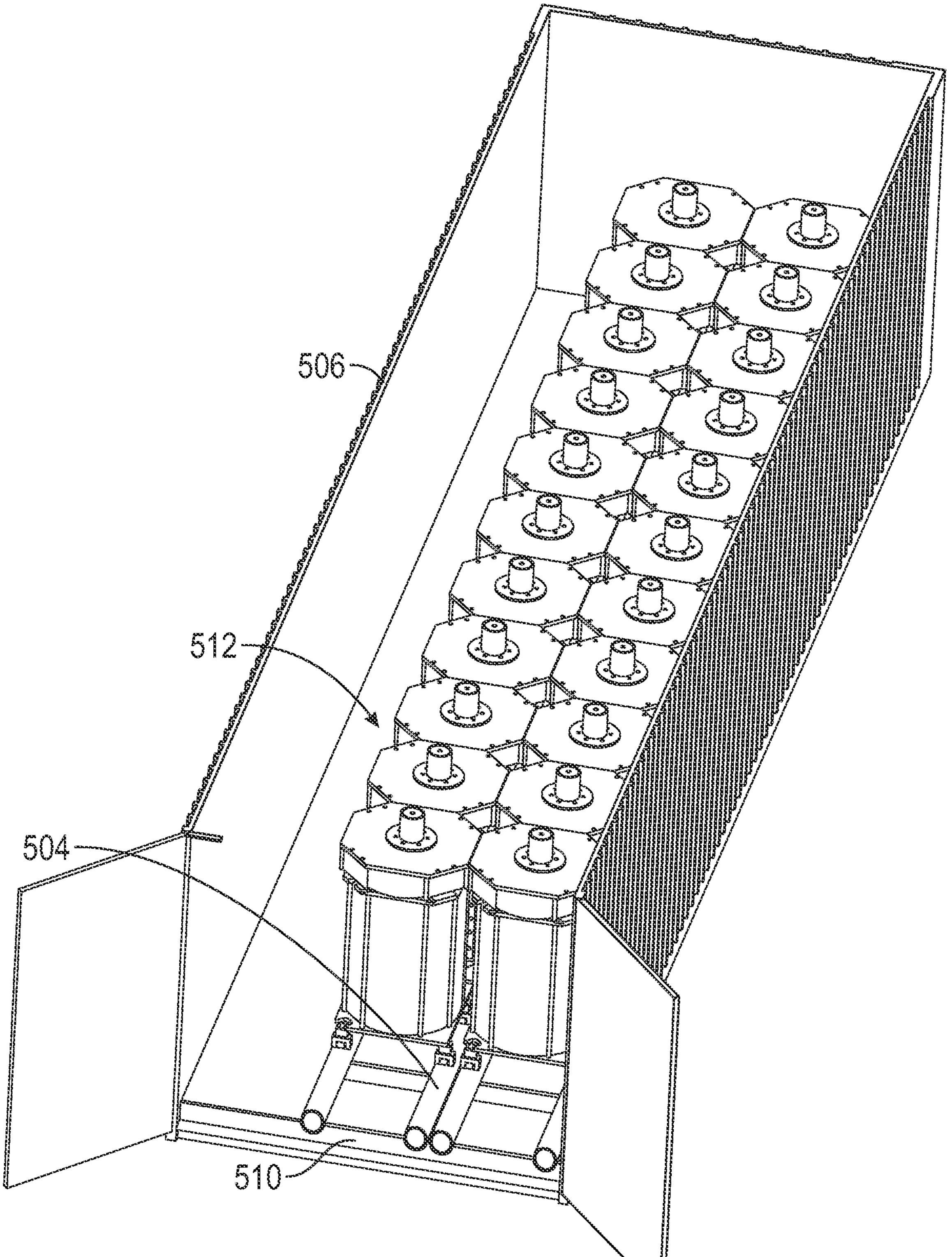

FIG. 24

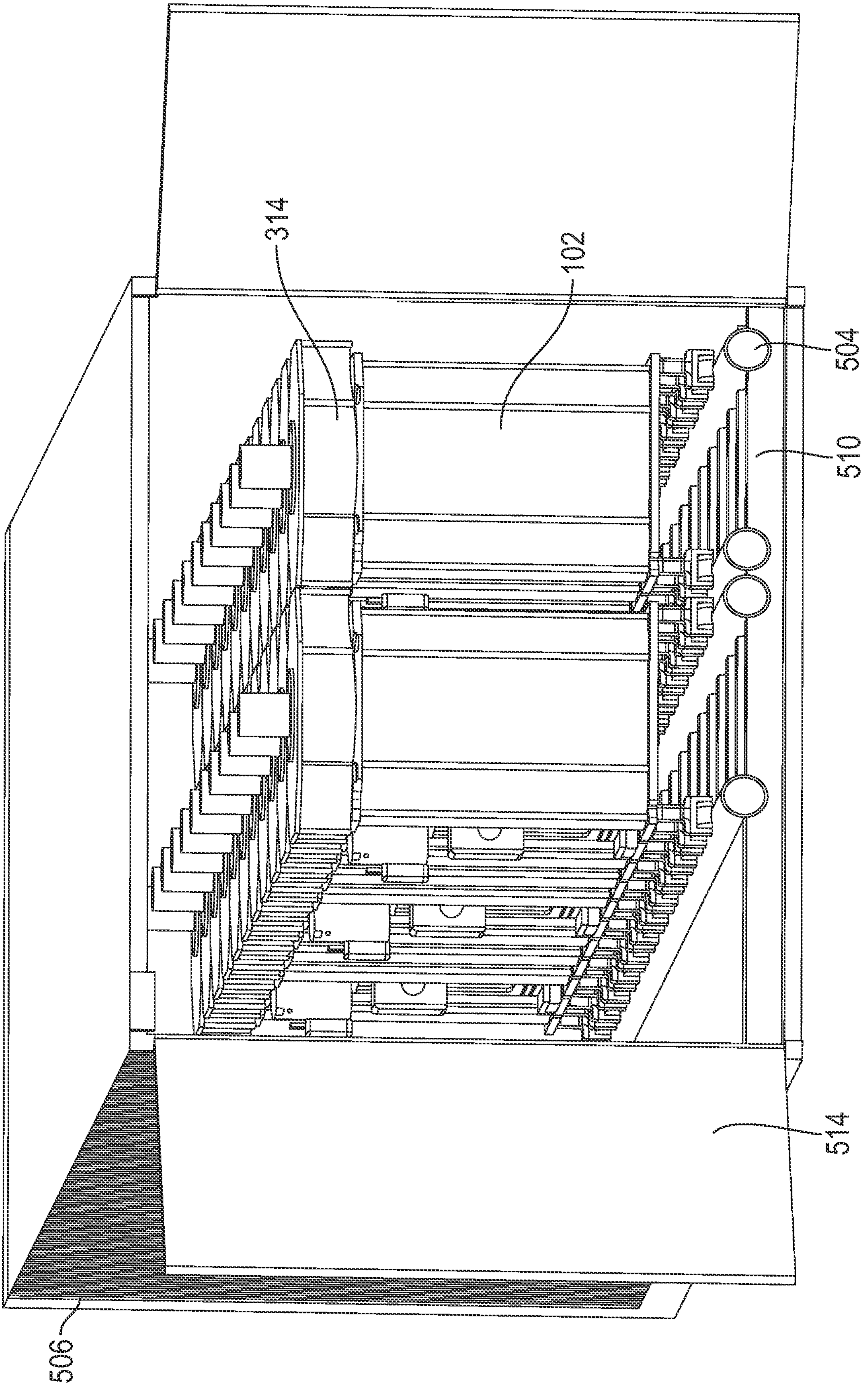

FIG. 25

INTERNATIONAL SEARCH REPORT

International application No.

PCT/US2024/052872

A. CLASSIFICATION OF SUBJECT MATTER

IPC: ***F16F 15/03*** (2024.01); ***B65D 81/02*** (2024.01); ***F16F 7/00*** (2024.01); ***F16F 7/06*** (2024.01); ***G12B 3/08*** (2024.01); ***H02K 7/02*** (2024.01); ***H02K 7/16*** (2024.01)

CPC: ***F16F15/03; B65D81/02; F16F7/00; F16F7/06; G12B3/08; H02K7/02; H02K7/025; H02K7/16; Y02E60/16;*** *Y02E70/00*

According to International Patent Classification (IPC) or to both national classification and IPC

B. FIELDS SEARCHED

Minimum documentation searched (classification system followed by classification symbols)

See Search History Document

Documentation searched other than minimum documentation to the extent that such documents are included in the fields searched

See Search History Document

Electronic data base consulted during the international search (name of data base and, where practicable, search terms used)

See Search History Document

C. DOCUMENTS CONSIDERED TO BE RELEVANT

Category*	Citation of document, with indication, where appropriate, of the relevant passages	Relevant to claim No.
	US 2015/0008778 A1 (QUANTUM ENERGY STORAGE CORPORATION) 08 January 2015 (08.01.2015)	
Y	Fig. 2; paragraph [0097]; paragraph [0098]	1, 2, 6-9, 14
A		3-5, 10-13
	US 2016/0047433 A1 (NORTHROP GRUMMAN SYSTEMS CORPORATION) 18 February 2016 (18.02.2016)	
Y	Fig. 4; Fig. 6; paragraph [0022]; paragraph [0024]; paragraph [0031]; paragraph [0034]; paragraph [0035]; paragraph [0037]	1, 2, 6-9, 14
A		3-5, 10-13
	US 2,048,523 A (STENGER) 21 July 1936 (21.07.1936)	
Y	Figs. 1-2; column 1, lines 39-51; pg. 1, column 2, lines 2-12	2
A		3-5, 10-13

☐ Further documents are listed in the continuation of Box C. ☐ See patent family annex.

*	Special categories of cited documents:
"A"	document defining the general state of the art which is not considered to be of particular relevance
"D"	document cited by the applicant in the international application
"E"	earlier application or patent but published on or after the international filing date
"L"	document which may throw doubts on priority claim(s) or which is cited to establish the publication date of another citation or other special reason (as specified)
"O"	document referring to an oral disclosure, use, exhibition or other means
"P"	document published prior to the international filing date but later than the priority date claimed
"T"	later document published after the international filing date or priority date and not in conflict with the application but cited to understand the principle or theory underlying the invention
"X"	document of particular relevance; the claimed invention cannot be considered novel or cannot be considered to involve an inventive step when the document is taken alone
"Y"	document of particular relevance; the claimed invention cannot be considered to involve an inventive step when the document is combined with one or more other such documents, such combination being obvious to a person skilled in the art
"&"	document member of the same patent family

Date of the actual completion of the international search

27 November 2024 (27.11.2024)

Date of mailing of the international search report

05 February 2025 (05.02.2025)

Name and mailing address of the ISA/US

COMMISSIONER FOR PATENTS
MAIL STOP PCT, ATTN: ISA/US
P.O. Box 1450
Alexandria, VA 22313-1450
UNITED STATES OF AMERICA

Facsimile No. **571-273-8300**

Authorized officer

SHANE THOMAS

Telephone No. **PCT Helpdesk: (571) 272-4300**

Box No. III Observations where unity of invention is lacking (Continuation of item 3 of first sheet)

This International Searching Authority found multiple inventions in this international application, as follows:

This application contains the following inventions or groups of inventions which are not so linked as to form a single general inventive concept under PCT Rule 13.1. In order for all inventions to be examined, the appropriate additional examination fee must be paid.

Group I: Claims 1-14 are directed towards a damping seismic wave mitigation system.

Group II: Claims 15-20 are directed towards a pendulum sprung seismic wave mitigation system.

The inventions listed as Groups I-II do not relate to a single general inventive concept under PCT Rule 13.1 because, under PCT Rule 13.2, they lack the same or corresponding special technical features for the following reasons:

The special technical features of Group I include at least a skid; a plurality of rods extending from the skid; a flywheel including a top plate, the flywheel suspended by the rods; and a plurality of magnetic dampers, each magnetic dampers comprised of two halves, a first half secured to the base plate, and a second half secured to a surface opposite the base plate, wherein the magnetic dampers are configured to arrest movement of the flywheel, which are not present in Group II.

The special technical features of Group II include at least a frame member having a generally U-shaped configuration and including a pair of vertical arms and a cross member; a plurality of pendulum springs connected to the frame member at a first end; the plurality of pendulum springs connected to the base on a second end; and an elastomeric pad, wherein the plurality of pendulum springs suspends the base and the flywheel system above the elastomeric pad, the elastomeric pad is configured to limit vertical movement of the base as a result of seismic wave, which are not present in Group I.

The common technical features shared by Groups I-II are a seismic wave mitigation system comprising a flywheel including a base.

However, these common features are previously disclosed by GB 2495514 A to Turner et al., (hereinafter "Turner"). Turner discloses a seismic wave mitigation system comprising a flywheel (7; Fig. 1) including a base (1; A large flywheel energy storage device comprises a flywheel 7 disposed within a vacuum/containment vessel 1. By floating the flywheel containment / vacuum vessel 1 in another vessel 18 containing a suitable liquid 19, and torsionally and positionally anchoring the vacuum/containment vessel 1 using damper 6, seismic forces are considerably ameliorated and the flywheel 7 can be designed to ride through seismic events to the required level; Fig. 1; Abstract).

Since the common technical features are previously disclosed by the Turner reference, these common features are not special and so Groups I-II lack unity.

INTERNATIONAL SEARCH REPORT

International application No.

PCT/US2024/052872

Box No. III **Observations where unity of invention is lacking (Continuation of item 3 of first sheet)**

1. ☐ As all required additional search fees were timely paid by the applicant, this international search report covers all searchable claims.

2. ☐ As all searchable claims could be searched without effort justifying additional fees, this Authority did not invite payment of additional fees.

3. ☐ As only some of the required additional search fees were timely paid by the applicant, this international search report covers only those claims for which fees were paid, specifically claims Nos.:

4. ☑ No required additional search fees were timely paid by the applicant. Consequently, this international search report is restricted to the invention first mentioned in the claims; it is covered by claims Nos.: **1-14**

Remark on Protest

☐ The additional search fees were accompanied by the applicant's protest and, where applicable, the payment of a protest fee.

☐ The additional search fees were accompanied by the applicant's protest but the applicable protest fee was not paid within the time limit specified in the invitation.

☐ No protest accompanied the payment of additional search fees.