(12) INTERNATIONAL APPLICATION PUBLISHED UNDER THE PATENT COOPERATION TREATY (PCT)

(19) World Intellectual Property Organization
International Bureau

(43) International Publication Date
11 July 2013 (11.07.2013)

WIPO | PCT

(10) International Publication Number
WO 2013/102925 A2

(51) International Patent Classification: Not classified

(21) International Application Number: PCT/IN20 12/000777

(22) International Filing Date: 29 November 2012 (29.1 1.2012)

(25) Filing Language: English

(26) Publication Language: English

(30) Priority Data:
3382/MUM/201 1 2 December 201 1 (02.12.201 1) IN

(71) Applicant: STERLITE TECHNOLOGIES LTD. [IN/IN]; Thakur, Deepak, E1/E2/E3, MIDC, Waluj, Aurangabad 43 1136, Maharashtra (IN).

(72) Inventor; and
(71) Applicant : MISHRA, Rajendra [IN/IN]; K-302, Konark Indrayu Enclave, Phase-11, NIBM, Road, Pune-4 11048, Maharashtra (IN).

(81) Designated States *(unless otherwise indicated, for every kind of national protection available):* AE, AG, AL, AM, AO, AT, AU, AZ, BA, BB, BG, BH, BN, BR, BW, BY, BZ, CA, CH, CL, CN, CO, CR, CU, CZ, DE, DK, DM, DO, DZ, EC, EE, EG, ES, FI, GB, GD, GE, GH, GM, GT, HN, HR, HU, ID, IL, IN, IS, JP, KE, KG, KM, KN, KP, KR, KZ, LA, LC, LK, LR, LS, LT, LU, LY, MA, MD, ME, MG, MK, MN, MW, MX, MY, MZ, NA, NG, NI, NO, NZ, OM, PA, PE, PG, PH, PL, PT, QA, RO, RS, RU, RW, SC, SD, SE, SG, SK, SL, SM, ST, SV, SY, TH, TJ, TM, TN, TR, TT, TZ, UA, UG, US, UZ, VC, VN, ZA, ZM, ZW.

(84) Designated States *(unless otherwise indicated, for every kind of regional protection available):* ARIPO (BW, GH, GM, KE, LR, LS, MW, MZ, NA, RW, SD, SL, SZ, TZ, UG, ZM, ZW), Eurasian (AM, AZ, BY, KG, KZ, RU, TJ, TM), European (AL, AT, BE, BG, CH, CY, CZ, DE, DK, EE, ES, FI, FR, GB, GR, HR, HU, IE, IS, IT, LT, LU, LV, MC, MK, MT, NL, NO, PL, PT, RO, RS, SE, SI, SK, SM, TR), OAPI (BF, BJ, CF, CG, CI, CM, GA, GN, GQ, GW, ML, MR, NE, SN, TD, TG).

Declarations under Rule 4.17 :

— *as to the identity of the inventor (Rule 4.1 7(l))*

— *as to applicant's entitlement to apply for and be granted a patent (Rule 4.1 7(H))*

— *of inventorship (Rule 4.17(iv))*

Published:

— *without international search report and to be republished upon receipt of that report (Rule 48.2(g))*

(54) Title: ELECTRICAL POWER CABLE

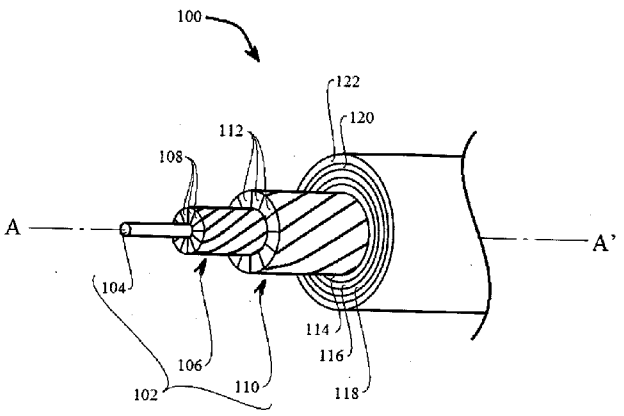

Figure 1

(57) Abstract: An electrical power cable having improved conductivity, better compaction of electrical conductor material within the space available in the cable for electrical conductor material, and reduced distribution losses is provided. In one embodiment, the electrical power cable includes at least one conductor component, said at least one conductor component further includes compactly packed trapezoidal cross-section aluminum strands which are prepared from high electrical conductivity aluminum. In detail, firstly, said high electrical conductivity aluminum is obtained by treating molten aluminum with boron for removal of electric conductivity decreasing impurities. Thereafter, aluminum rod/s is/are prepared from high electrical conductivity aluminum. In the next step, trapezoidal cross-section strands are obtained from the aluminum rod. Finally, obtained trapezoidal strands are annealed under controlled conditions to further improve their electrical conductivity. To further enhance the overall electrical conductivity of the electrical power cable, the trapezoidal cross-section strands are packed very compactly within the cable.

WO 2013/102925 A2

ELECTRICAL POWER CABLE

FIELD OF INVENTION

[0001] This invention relates to electrical power cable. More particularly, this invention relates to electrical power cable having enhanced electrical conductivity, better compaction of electrical conductor material within the space available in the cable for electrical conductor material, and reduced distribution losses.

BACKGROUND OF THE INVENTION

[0002] Distribution losses incurred during distribution of electricity from source (say, main receiving sub-station) to consumers is a major hurdle in efficient use of electricity. Resistive power losses of power conductors and cables, and theft of electric power contribute significantly to distribution losses. In some countries, including India, a recent study indicates that around 30% of generated electric power is lost in inefficient distribution. Though measures are being taken to reduce such losses, a technical solution for further reduction remains a challenge to be met on priority.

[0003] Suggested methods for reducing resistive power losses of power conductors/cables include use of conductors made of high electrical conductivity materials (say, copper, silver, aluminum, etc). However, in power conductors/cables, considering economic viability, aluminum/aluminum alloys are most widely used conductor material.

[0004] Though transmission of electricity through bare overhead conductors remains a widely used method of power transmission, in distribution of electric power from source to consumers, safety from accidental electrocution and spark (or fire) has always been a concern. Moreover, bare overhead conductors are prone to variations in performance due to dynamic climatic conditions. They also suffer from problems of ageing, sagging and easy thefts of electricity. Also, bare overhead conductors need a grid infrastructural setup, which at times, is not easy to provide everywhere.

[0005] Increasing requirements for efficient and reliable distribution, concerns of safety, along with a need for reducing thefts of electric power have paved the way for electrical power cables. In such cables, electric power is distributed from the source to the consumer via well insulated and protected power conductors. Such cables are basically power conductor/s (or strands of conductor) wrapped in suitable covering/s (or layer/s) of insulation, protection/strength providing materials, etc.

[0006] A disadvantage with electrical power cables is the cost associated with their raw materials (conductors, insulation material, strength material, protection material, etc.), manufacturing process, underground laying and maintenance. In spite of higher costs, electrical power cables offer some advantages such as: electrical power cables are better immune to power thefts and they can be easily laid underground (or even hanged overhead in some cases) at locations where provision of overhead bare power conductor/s may not be safe or easy. Also, use of electrical power cables releases expensive urban land for better use. Electric power cable circuit is more reliable and has much better up-time. It also allows better landscaping.

[0007] However, as far as power losses are concerned, there still exists an acute requirement for further reduction of resistive power losses and better compaction of electrical conductor material within the space available for electrical conductor material in an electrical power cable.

[0008] Hence, for achieving better energy efficiency and, considering the economic viability and the investment associated with electrical power cables, there is a deep felt need for an economically viable and technically improved electrical power cable which would have enhanced electrical conductivity, better compaction of electric power electrical conductor material within the space available in the cable for electrical conductor material, and reduced distribution losses (such as reduced DC resistance, reduced I^2R losses and better immunity to theft of electric power).

NEED OF THE INVENTION

[0009] Accordingly, there is a need for an economically viable and technically improved electrical power cable which would have enhanced electrical conductivity, better compaction of electrical conductor material within the space available in the cable for electrical conductor material, and reduced distribution losses.

SUMMARY, OBJECTS AND ADVANTAGES OF THE INVENTION

[00010] An object of this invention is to provide a technically improved electrical power cable which comprises of compactly packed non-circular cross-section high electrical conductivity aluminum strands which are prepared from special processing and treatment of aluminum. The aluminum strands of the electric power cable have enhanced electrical conductivity which is at least 60% IACS (International Annealed Copper Standard). The

technically improved electrical power cable of the present invention would have enhanced electrical conductivity, better compaction of electric conductor material within the space available in the cable for electrical conductor material, and reduced distribution losses. Better compaction of electric conductor material is helpful in efficient filling of the space available in the cable with electrical conductor material. As a result of better compaction, more electric conductor material can be filled within the available space and overall electrical conductivity of the cable is increased further.

[0001 1] Another object of this invention is to provide a technically improved electrical power cable which comprises of compactly packed trapezoidal cross-section high electrical conductivity aluminum strands which are prepared from special processing and treatment of aluminum. The aluminum strands of the electric power cable have enhanced electrical conductivity (> 60% IACS). The technically improved electrical power cable of the present invention would have enhanced electrical conductivity, better compaction of electric conductor material within the space available in the cable for electrical conductor material, and reduced distribution losses. Better compaction of electric conductor material is helpful in efficient filling of the space available in the cable with electrical conductor material. As a result of better compaction, more electric conductor material can be filled within the available space and overall electrical conductivity of the cable is increased further.

[00012] Still another object of this invention is to provide a technically improved medium volt (MV i.e., 6.6 KV-33KV) electrical power cable which comprises of compactly packed trapezoidal cross-section high electrical conductivity aluminum strands which are prepared from special processing and treatment of aluminum. The aluminum strands of the electric power cable have enhanced electrical conductivity (> 60% IACS). The technically improved medium volt electrical power cable of the present invention would have enhanced electrical conductivity, better compaction of electrical conductor material within the space available in the cable for electrical conductor material and reduced distribution losses (such as reduced DC resistance, reduced I^2R losses and better immunity to theft of electric power).

[00013] Yet another object of the present invention is to provide a technically improved electrical power cable which would have enhanced electrical conductivity, better compaction of electric conductor material within the space available in the cable for electrical conductor material, and reduced distribution losses.

[00014] In one embodiment, the electrical power cable of the present invention includes a conductor component, said conductor component is a defined path through which electric current would flow in the cable. The conductor component further includes compactly packed trapezoidal cross-section aluminum strands which are prepared from special processing and treatment of aluminum. In detail, firstly, an aluminum rod is prepared from high electrical conductivity aluminum; said high electrical conductivity aluminum is obtained by treating molten aluminum with boron for removal of conductivity decreasing impurities (say, impurities of transition metals such as titanium, vanadium, chromium, zirconium, etc.). Thereafter, trapezoidal cross-section strands are obtained from the aluminum rod. Finally, obtained trapezoidal cross-section strands are annealed under controlled conditions for a predetermined duration. During the annealing process, the obtained trapezoidal cross-section strands are firstly heated to a temperature of 320 °C in an annealing furnace for duration of 15-18 hours. Thereafter, heated strands are gradually allowed to cool for about 12-15 hours till they reach the ambient temperature. Annealing the strands in the described manner further improves their electrical conductivity. It is to be noted that if said conductor component further includes one or more circular cross-section aluminum strands, even they may be obtained by the same process as the trapezoidal cross-section strands as described above. After annealing, the trapezoidal cross-section strands (and circular cross-section aluminum strands, if any) are ready to be used for manufacturing the electric power cable of present invention. To enhance the conductivity of the electrical power cable still further, (and circular cross-section aluminum strands, if any) the trapezoidal cross-section strands are packed very compactly within the cable. The trapezoidal cross-section strands (and circular cross-section aluminum strands, if any) are arranged in a manner such that cross-section of each of the trapezoidal cross-section strands does not lie in tangential contact with the cross-section of any other strand which lies adjacent to it and belongs to the conductor component (in other words, the trapezoidal cross-section strands are arranged in a manner such that cross-section of each of the trapezoidal cross-section strand lies in contact with cross-section of every other strand which lies adjacent to it and belongs to the conductor component at more than one points). The trapezoidal cross-section strands (and circular cross-section aluminum strands, if any) are compactly packed in a manner such that, Due to use of trapezoidal cross-section strands,

inter-strand voids are reduced and more electrical conductor material (i.e. high electrical conductivity aluminum having enhanced electrical conductivity which is ≥ 60% IACS) is packed within the space' available in the cable for electrical conductor material. Better compaction of electric conductor material is helpful in efficient filling of the space available in the cable with electrical conductor material and improving the overall electrical conductivity of the cable is increased further.

[00015] Other objects and advantages of the present invention will be apparent from the following description when read in conjunction with the accompanying drawings which are incorporated for illustration of preferred embodiments of the present invention and are not intended to limit the scope thereof.

BRIEF DESCRIPTION OF THE ACCOMPANYING FIGURES

[00016] The objects and features of the present invention will become clear when read in conjunction with the accompanying figures, in which:

[00017] **Figure 1** shows a perspective view of an electrical power cable in accordance with the first embodiment of the present invention.

[000 18] **Figure** 2 shows a cross-sectional view of the electrical power cable in accordance with the first embodiment of the present invention.

[00019] **Figure 3** shows a perspective view of an electrical power cable in accordance with the second embodiment of the present invention.

[**00020]Figure 4** shows a cross-sectional view of the electrical power cable in accordance with the second embodiment of the present invention.

[0002 1jit should be understood that the drawings and the associated descriptions below are intended and provided to illustrate embodiments of the invention and not to limit the scope of the invention. Also, it should be noted that the drawings are not necessarily drawn to scale.

DETAILED DESCRIPTION OF PRESENT INVENTION

[00022] This invention relates to a technically improved electrical power cable which includes compactly packed non-circular cross-section aluminum strands which are prepared from special processing and treatment of aluminum. The aluminum strands of the electric power cable have enhanced electrical conductivity (> 60% IACS). The technically improved electrical power cable of the present invention has enhanced electrical conductivity, better

compaction of electrical conductor material within the space available in the cable for electrical conductor material and reduced distribution losses (such as reduced DC resistance, reduced I^2R losses and better immunity to theft of electric power). The non-circular cross-section aluminum strands are arranged within the electrical power cable in a manner such that, the cross-section of each of non-circular cross-section aluminum strands does not lie in tangential contact with the cross-section of any other aluminum strand which lies adjacent to it (in other words, each of the non-circular cross-section aluminum strands are arranged in a manner such that the cross-section of each of the non-circular cross-section aluminum strand lies in contact with cross-section of every other aluminum strand which lies adjacent to it at more than one points). Due to such an arrangement of non-circular cross-section aluminum strands, inter-strand voids are reduced, more electrical conductor material is packed within the space available in the cable for electrical conductor material, and a compact packing of strands is achieved.

[00023] Reference will now be made in detail to selected embodiments of the present invention, examples of which are illustrated in the accompanying drawings, which are not intended to limit scope of the present invention. Whenever possible, the same reference numerals will be used throughout the description to refer to the same or like parts of the invention.

[00024] In one embodiment, the electrical power cable provided by this invention includes a conductor component, said conductor component is a defined path through which electric current would flow in the cable. The conductor component further includes a central conductor surrounded by two layers of compactly packed trapezoidal cross-section strands. The central conductor is a circular cross-section strand. The central conductor and trapezoidal cross-section strands in layers surrounding it are prepared from specially processed and treated aluminum. The central conductor and Trapezoidal cross-section strands in layers surrounding it have enhanced electrical conductivity (> 60% IACS). In detail, firstly, an aluminum rod is prepared from high electrical conductivity aluminum; said high electrical conductivity aluminum is obtained by treating molten aluminum with boron for removal of conductivity decreasing impurities (say, impurities of transition metals such as titanium, vanadium, chromium, zirconium, etc.). Thereafter, an aluminum rod/s is prepared from boron treated aluminum. In the next step, aluminum strands which would

form the central conductor and the trapezoidal cross-section strands in layers surrounding it are obtained from said aluminum rods by drawing them through specifically designed dies (different dies are used to draw strands which would from central conductor and trapezoidal cross-section strands of layers surrounding the central conductor). Post drawing, obtained strands are annealed under controlled conditions for a predetermined duration. During the annealing process, firstly, the obtained aluminum strands are heated to a temperature of 320 °C in an annealing furnace for duration of 15-18 hours. Thereafter, heated strands are gradually allowed to cool for about 12-15 hours till they reach the room temperature. Annealing the strands in the described manner further improves their electrical conductivity. After annealing, the strands are ready to be used for manufacturing the electric power cable of present invention. In order to enhance the conductivity of the electrical power cable still further, the trapezoidal cross-section aluminum strands thus obtained are packed in a very compact manner around the central conductor to provide more electrical conductor material per unit volume of the space available for the conductor component within the electrical power cable. The trapezoidal cross-section strands are arranged in a manner such that cross-section of each of the trapezoidal cross-section strands does not lie in tangential contact with the cross-section of any other strand which lies adjacent to it and belongs to the conductor component (in other words, the trapezoidal cross-section strands are arranged in a manner such that cross-section of each of the trapezoidal cross-section strand lies in contact with cross-section of every other strand which lies adjacent to it and belongs to the conductor component at more than one points). Due to such an arrangement of trapezoidal cross-section strands, inter-strand voids are reduced, more electrical conductor material is packed within the space available in the electrical power cable for electrical conductor material, and a compact packing of strands is achieved. This resulted in enhancing overall electrical conductivity of the electrical power cable.

[00025] **Figure 1** is a perspective view of the electrical power cable in accordance with the first embodiment of the present invention, whereas **Figure 2** shows a cross-sectional view of the electrical power cable in accordance with the first embodiment of the present invention (i.e. **Figure 2** is a cross-sectional view of the electrical power cable shown in **Figure 1).** The electrical power cable **100** comprises of a longitudinal axis AA'and a conductor component

102 which lies symmetrically around the longitudinal axis AA'. The conductor component **102** is the path through which electric current would flow in the cable.

[00026] The conductor component **102** includes a central conductor **104.** The central conductor **104** is a circular cross-section strand. The central conductor **104** is surrounded by an inner layer **106.** Inner layer **106** is formed of multiple compactly packed trapezoidal cross-section strands **108.** In detail, inner layer **106** is formed by helically winding and compactly packing multiple trapezoidal cross-section strands **108** around the central conductor **104** and the axis AA' as shown in **figure 1** and **figure 2.** Strands **108** are symmetrically laid around the central conductor **104** as shown in **figure 1** and **figure 2.** Inner layer **106** is further surrounded by an outer layer **110.** Outer layer **110** is formed by helically winding multiple trapezoidal cross-section strands **112** around inner layer **106** and the axis AA' in a manner as shown in **figure 1** and **figure 2.** Strands **112** are symmetrically laid around inner layer **106** as shown in **figure 1** and **figure 2.** Both inner layer **106** and outer layer **110** are compactly laid around central conductor **104** and longitudinal axis AA' in a manner such that there is substantially little or no voids left in between the adjacent strands. The central conductor **104,** inner layer **106** (along with strands **108)** and the outer layer **110** (along with strands 112) together form the conductor component **102** of the electrical power cable **100.** Further, the central conductor **104** and the trapezoidal cross-section strands **108** and **112** are made of high electrical conductivity aluminum (> 60% IACS). Central conductor **104** and the trapezoidal cross-section strands **108** and **112** are prepared from special processing and treatment of aluminum.

[00027] In detail, firstly, aluminum ingots are melted and the melt is treated with boron for removal of conductivity decreasing impurities (say, impurities of transition metals such as titanium, vanadium, chromium, zirconium, etc.). Thereafter, an aluminum rod/s is prepared from boron treated aluminum. In the next step, aluminum strands which would form the central conductor **104** and the trapezoidal cross-section strands **108** and **112** of the electric power cable **100** are obtained from said aluminum rods by drawing them through specifically designed dies (different dies are used to draw strands which would from central conductor **104** and trapezoidal cross-section strands **108** and **112** respectively). Post drawing, obtained strands are annealed under controlled conditions for a predetermined duration. During the annealing process, firstly, the obtained aluminum strands are heated to a

temperature of 320 °C in an annealing furnace for duration of 15-18 hours. Thereafter, heated strands are gradually allowed to cool for about 12-15 hours till they reach the room temperature. Annealing the strands in the described manner further improves their electrical conductivity. The above mentioned process and treatment provided high electrical conductivity aluminum strands (upto 64.9 % IACS). After annealing, the strands are ready to be used for manufacturing the electric power cable of present invention. The above mentioned process and treatment provided high electrical conductivity aluminum strands (upto 64.9 % IACS). In order to further enhance the overall electrical conductivity of the electrical power cable, central conductor **104** and the trapezoidal cross-section strands **108** and **112** of layers **106** and **110** respectively are packed in a very compact manner to provide more electrical conductor material per unit volume of the space available within the electrical power cable **100** for conductor component **102.** The trapezoidal cross-section strands **108** and **112** are arranged in a manner such that cross-section of each of the trapezoidal cross-section strands **108** and **112** does not lie in tangential contact with the cross-section of any other strand which lies adjacent to it and belongs to the conductor component **102** (in other words, the trapezoidal cross-section strands **108** and **112** are arranged in a manner such that cross-section of each of the trapezoidal cross-section strands **108** and **112** lies in contact with cross-section of every strand which adjacent to it and belongs to the conductor component **102** at more than one points). Due to such an arrangement of trapezoidal cross-section strands **108** and **112,** inter-strand voids are reduced, more electrical conductor material is packed within the space available in the electric power cable **100** for electrical conductor material, and a compact packing of strands is achieved. This resulted in enhancing overall electrical conductivity of the electrical power cable **100.**

[00028] As shown in **Figure 1,** the conductor component **102** is further surrounded by multiple layers of coverings for providing features such as cable insulation, safety, strength and armoring. The outer layer **110** (or the conductor component **102)** is surrounded by a covering of extruded semiconducting screen i.e. covering **114.** Covering **114** is further surrounded by a covering of extruded XLPE insulation i.e. covering **116.** Covering **116** is further covered by an extruded semiconducting insulation sheath i.e. covering **118.** Covering **118** is still further surrounded by a helical covering of aluminum round wire armor (or flat

wire armor) i.e. Covering **120.** Finally, covering **120** is covered by a covering of extruded PVC/polyethylene i.e. cover **122.**

[00029] It should be noted that scope of the present invention is not limited by the embodiment described above. The scope of the invention is also not limited by the physical dimensions of the embodiment of electrical power cable (and its components) described above. Hence, scope of the present invention is not limited by dimensions and shape of central conductor **104,** and the dimensions of trapezoidal cross-section strands **108** and **112.** The scope of the invention is also not limited by the material type, composition, thickness, order of arrangement and diametrical dimensions of coverings **114, 116, 118, 120,** and **122.**

[00030] It should be noted that suitable variations in the number and type of coverings in the first embodiment described above is also covered within the scope of the invention. Hence, the scope of the present invention is also not limited itself by number, type, composition and order of arrangement of coverings described in the first embodiment described above.

[0003 1] In other words, all possible dimensional variations (relating to electrical power cable and its components) in the embodiment described above are very well covered within the scope of the invention. The invention necessarily requires that the electric power cable includes atleast one conductor component of for carrying electricity (i.e to offer path/s within the cable for electric current to travel), and said atleast one conductor component further including atleast two non-circular corss-section aluminum strands. Hence, scope of the invention is not limited by the corss-sectional shape of said atleast two non-circular corss-section aluminum strands. As an example, embodiments of the invention which include triangular corss-section aluminum strands within its conductor component/s are also fully covered within the scope of the invention.

[00032] It should be noted that suitable variations in the number and type of coverings in the embodiment described above is also covered within the scope of the invention. Hence, the scope of the present invention is also not limited itself by number, type and composition of coverings described in the above embodiment.

[00033] A second embodiment of the electrical power cable according to the present invention is shown in **figure 3. Figure 3** is a perspective view of the electrical power cable in accordance with the second embodiment of the present invention, whereas **figure 4** shows a cross-sectional view of the electrical power cable in accordance with the second

embodiment of the present invention (i.e. **figure 4** is a cross-sectional view of the electrical power cable shown in **figure 3).** The electrical power cable **200** comprises of a longitudinal axis **BB'** and three cores **202a, 202b** and **202c.** All three cores **202a, 202b** and **202c** are laid symmetrically around the longitudinal axis **BB'.** All three cores **202a, 202b** and **202c** are similar in structure, material composition and electrical properties. . As shown in the **figure 3,** core **202a** comprises of a central conductor **204.** The central conductor **204** has a circular cross section and is surrounded by an inner layer **206.** Inner layer **206** is formed of multiple compactly packed trapezoidal cross-section strands **208.** In detail, inner layer **206** is formed by helically winding and compactly packing multiple trapezoidal cross-section strands **208** around the central conductor **204** as shown in **figure 3** and **figure 4.** Strands **208** are symmetrically laid around the central conductor **204** as shown in **figure 3** and **figure 4.** Inner layer **206** is further surrounded by an outer layer **210.** Outer layer **210** is formed by helically winding and compactly packing multiple trapezoidal cross-section strands **212** around inner layer **206.** Strands **212** are symmetrically laid around the Inner layer **206** in a manner as shown in **figure 3** and **figure 4.** The outer layer **210** is surrounded by a covering of extruded semiconducting screen i.e. covering **214.** Covering **214** is further surrounded by a covering of extruded XLPE insulation i.e. covering **216.** Covering **216** is further covered by a semiconducting insulation sheath i.e. covering **218.** Covering **218** is still further surrounded by helically applied copper tape sheath i.e. Covering **220.**

[00034] Within core **202a,** the central conductor **204** and trapezoidal cross-section strands **208** and **212** of layers **206** and **210** respectively are made of high electrical conductivity aluminum (> 60% IACS). Central conductor **204** and trapezoidal cross-section strands **208** and **212** are prepared by the same process as described above in the first embodiment of the invention. Cores **202b** and **202c** are similar to core **202a** in structure, material composition and electrical properties. Since all cores **202a, 202b** and **202c** are same in structure, material composition and electrical properties, for simplicity of explanation, only core **202a** is explained in detail. The central conductor **204,** inner layer **206,** outer layer **210** together form the conductor component of core **202a.** Similarly, other two cores **202b** and **202c** also have their respective conductor components. The conductor components of all three cores **202a, 202b** and **202c** provide paths for electric current to flow within the cable.

[00035] In order to further enhance the overall electrical conductivity of the electrical power cable **200,** Both inner layer **206** and outer layer **210** are compactly laid around central conductor **204** in a manner such that there is substantially little or no voids left in between the adjacent strands. Within each core (i.e. core **202a, 202b** and **202c** respectively), the central conductor and trapezoidal strands are packed in a very compact manner to provide more electrical conductor material (i.e. high electrical conductivity aluminum) within the space available for conductor component. As an example, within core **202a,** central conductor **204** and the trapezoidal cross-section strands **208** and **212** are packed in a very compact manner to provide more electrical conductor material (i.e. high electrical conductivity aluminum) within the space available for conductor component. Also, within each core, the trapezoidal cross-section aluminum strands of both inner and outer layers are arranged in a manner such that cross-section of each trapezoidal cross-section strand does not lie in tangential contact with the cross-section of any other strand which lies adjacent to it and belongs to the same core (in other words, the trapezoidal cross-section aluminum strands of both inner and outer layers are arranged in a manner such that cross-section of each trapezoidal cross-section aluminum strand lies in contact with cross-section of every strand which lies adjacent to it and belongs to the same core at more than one points). As an example, within core **202a,** the trapezoidal cross-section aluminum strands **208** and **212** are arranged in a manner such that cross-section of each trapezoidal cross-section aluminum strands **208** and **212** does not lie in tangential contact with the cross-section of any other strand which lies adjacent to it and belongs to the same core (in other words, the trapezoidal Cross-section aluminum strands **208** and **212** are arranged in a manner such that cross-section of each trapezoidal cross-section aluminum strand **208** and **212** lies in contact with every strand which lies adjacent to it and belongs to the same core at more than one points). Due to such an arrangement of trapezoidal cross-section strands **208** and **212,** inter-strand voids are reduced, more electrical conductor material is packed within the space available in the electric power cable **200** for electrical conductor material, and a compact packing of strands is achieved. Similar arrangement of trapezoidal cross-section strands in cores **202b** and **202c** resulted in enhancing overall electrical conductivity of the electrical power cable **200.**

[00036] Collectively, all three cores **202a, 202b** and **202c** are surrounded by multiple layers of coverings for providing features such as cable insulation, safety, strength and armoring.

As shown in **figure 3,** all three cores **202a, 202b** and **202c** are packed together within a sheath **222** which is made from extruded (polyvinyl chloride) PVC. Inter core space left between the three cores and lying within sheath **222** is filled with PVC fillers **224.** Sheath **222** is further covered with a covering of galvanized Iron (GI) steel flat strip (or round wire) armoring for safety and strength i.e. covering **226.** Finally, covering **226** is further covered with an extruded PVC/polyethylene outer sheath i.e. covering **228.**

[00037] According to the second embodiment of the invention as described above, in all three cores, the dimensions and shape of central conductor (say, **204** for core **202a),** the dimensions of trapezoidal cross-section strands **208** and **212,** and the type, composition and dimensions of coverings of the cores (layers **214, 216, 218** and **220** for core **202a,** and similar corresponding coverings of cores **202b** and **202c),** and coverings **222, 226,** and **228,** and PVC filler **224,** are optimized to get enhanced electrical conductivity from the cable. However, in no case should these parameters be considered to limit the scope of the invention. Possible variations in the dimensions and shape of central conductors (say, **204),** the dimensions of trapezoidal cross-section strands surrounding central conductors (say, **208** and **212** for central conductors **204)** and, the type, composition and dimensions of coverings of the cores (say, **214, 216, 218** and **220** for core **202a,** corresponding coverings of cores **202b** and **202c),** coverings **2222, 226,** and **228,** and composition of filler **224** are very well covered within the scope of the invention.

[00038] It should be noted that suitable variations in the number and type and dimensions of coverings on the cores **202a, 202b, 202c** and the overall cable **200** in the embodiment described above is also covered within the scope of the invention. Hence, the invention does not limit itself to the number, material type, order of arrangement and dimensions of coverings described in the above embodiment.

[00039] Along with the two embodiments described above, other embodiments of the invention may include cable types having two or more than three conductor components. The provision of insulation and other coverings (say, insulation layer, armoring layer, etc) may be provided suitably on case to case basis. It should be noted that the scope of invention and its embodiments is not limited by the number of conductor components, cross-sectional shape (and dimensions) of non-circular cross-section strands of the conductor components, and the material type, order of arrangement and dimensions of coverings. As an example,

embodiments of the invention which include triangular cross-section aluminum strands within its conductor component/s are also fully covered within the scope of the invention. It should also be noted that the scope of invention and its embodiments is not limited by the dimensions of electric power cable, dimensions of conductor component/s, and thickness dimensions of coverings.

[00040] Variations in the embodiments of the present invention so as to provide electric power cable which could be used for various applications such as medium voltage MV applications i.e. in the range of 6.6 KV-33KV or high voltage applications, etc. are also fully covered within the scope and spirit of the invention.

[00041] It is to be understood that the foregoing description is intended to illustrate and not limit the scope of the invention. Accordingly, the embodiments of the invention described above are not intended to limit the invention. Although described in the context of above embodiments, other embodiments of the invention which would be apparent to those skilled in the art are very well covered within the scope of the invention. Thus, while the invention has been particularly shown and described with respect to the above mentioned embodiments, it will be understood by those skilled in the art that certain modifications or changes, in form and shape, may be made therein without departing from the scope and spirit of the invention.

We claim:

1. An electric power cable, said electric power cable comprising:

at least one conductor component for conducting electricity, said at least one conductor component further comprising a plurality of strands;

at least one cover layer made of electric insulator material, said at least one cover layer surrounding said at least one conductor component wherein,

within said at least one conductor component, cross-sectional shape of at least two of said plurality of strands is non-circular;

within said at least one conductor component, said at least two of said plurality of strands are arranged in a manner such that within a cross-section of said electric power cable, the cross-section of each of said at least two of said plurality of strands lies in contact with cross-section of at least one of the strands lying adjacent to it at more than one points;

within said at least one conductor component, each of said at least two of said plurality of strands are made of aluminum; and

said at least two of said plurality of strands being prepared by a method comprising steps of:

i. Obtaining purified aluminum by treating molten aluminum with boron for removal of impurities which cause reduction in electrical conductivity of aluminum;
ii. Preparing at least one aluminum rod from purified aluminum obtained in step (i);
iii. Obtaining said at least two of said plurality of strands from said at least one aluminum rod prepared in step (ii); and
iv. Annealing said at least two of said plurality of strands.

2. An electric power cable as claimed in claim 1, wherein within said at least one conductor component, electrical conductivity of each of said at least two of said plurality of strands is at least 60% IACS.

3. An electric power cable as claimed in claim 1, wherein within said at least one conductor component, cross-sectional shape of each of said at least two of said plurality of strands is trapezoidal.

4. An electric power cable, said electric power cable comprising:

a plurality of conductor components for conducting electricity, wherein each of said plurality of conductor components further comprising a plurality of strands;

at least one cover layer made of electric insulator material, said at least one cover layer surrounding said plurality conductor component wherein,

within each of said plurality of conductor components, cross-sectional shape of at least two of said plurality of strands is non-circular, and said at least two of said plurality of strands are arranged in a manner such that within a cross-section of said electric power cable, the cross-section of each of said at least two of said plurality of strands lies in contact with cross-section of at least one of the strands lying adjacent to it at more than one points;

within each of said plurality of conductor components, each of said at least two of said plurality of strands are made of aluminum;

and said at least two of said plurality of strands being prepared by a method comprising steps of:

i. Obtaining purified aluminum by treating molten aluminum with boron for removal of impurities which cause reduction in electrical conductivity of aluminum
ii. Preparing at least one aluminum rod from purified aluminum obtained in step (i)
iii. Obtaining said at least two of said plurality of strands from said at least one aluminum rod prepared in step (ii), and
iv. Annealing said at least two of said plurality of strands.

5. An electric power cable as claimed in claim 4, wherein within each of said plurality of conductor components, electrical conductivity of each of said at least two of said plurality of strands is at least 60% LACS.

6. An electric power cable as claimed in claim 4, wherein within each of said plurality of conductor components, cross-sectional shape of each of said at least two of said plurality of strands is trapezoidal.

7. An electric power cable, said electric power cable comprising:

at least one conductor component for conducting electricity, said at least one conductor component further comprising a plurality of strands;

at least one cover layer made of electric insulator material, said at least one cover layer surrounding said at least one conductor component wherein,

within said at least one conductor component, cross-sectional shape of at least two of said plurality of strands is non-circular;

within said at least one conductor component, said at least two of said plurality of strands are arranged in a manner such that within a cross-section of said electric power cable, the cross-section of each of said at least two of said plurality of strands does not lie in tangential contact with cross-section of at least one of the strands lying adjacent to it;

within said at least one conductor component, each of said at least two of said plurality of strands are made of aluminum; and

said at least two of said plurality of strands being prepared by a method comprising steps of:

i. Obtaining purified aluminum by treating molten aluminum with boron for removal of impurities which cause reduction in electrical conductivity of aluminum;
ii. Preparing at least one aluminum rod from purified aluminum obtained in step (i);
iii. Obtaining said at least two of said plurality of strands from said at least one aluminum rod prepared in step (ii); and
iv. Annealing said at least two of said plurality of strands.

8. An electric power cable, said electric power cable comprising:

a plurality of conductor components for conducting electricity, wherein each of said plurality of conductor components further comprising a plurality of strands;

at least one cover layer made of electric insulator material, said at least one cover layer surrounding said plurality conductor component wherein,

within each of said plurality of conductor components, cross-sectional shape of at least two of said plurality of strands is non-circular, and said at least two of said plurality of strands are arranged in a manner such that within a cross-section of said electric power cable, the cross-section of each of said at least two of said plurality of strands does not lie in tangential contact with cross-section of at least one of the strands lying adjacent to it;

within each of said plurality of conductor components, each of said at least two of said plurality of strands are made of aluminum;

and said at least two of said plurality of strands being prepared by a method comprising steps of:

i. Obtaining purified aluminum by treating molten aluminum with boron for removal of impurities which cause reduction in electrical conductivity of aluminum
ii. Preparing at least one aluminum rod from purified aluminum obtained in step (i)
iii. Obtaining said at least two of said plurality of strands from said at least one aluminum rod prepared in step (ii), and
iv. Annealing said at least two of said plurality of strands.

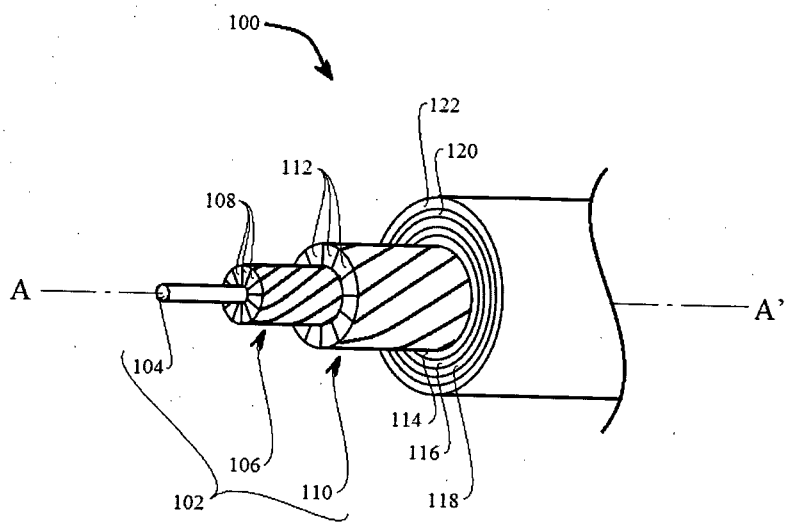

Figure 1

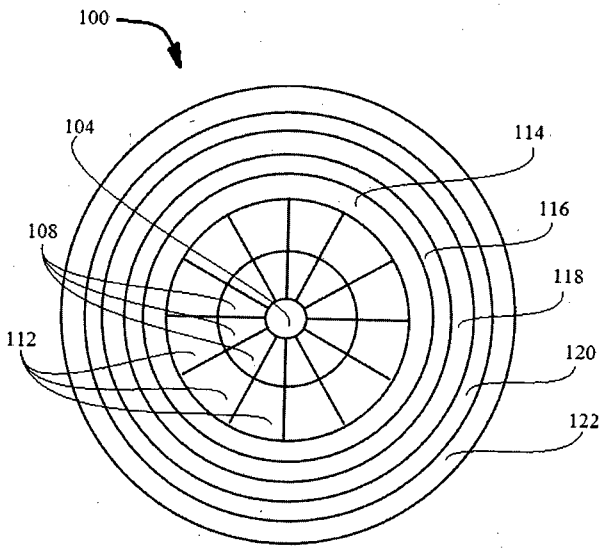

Figure 2

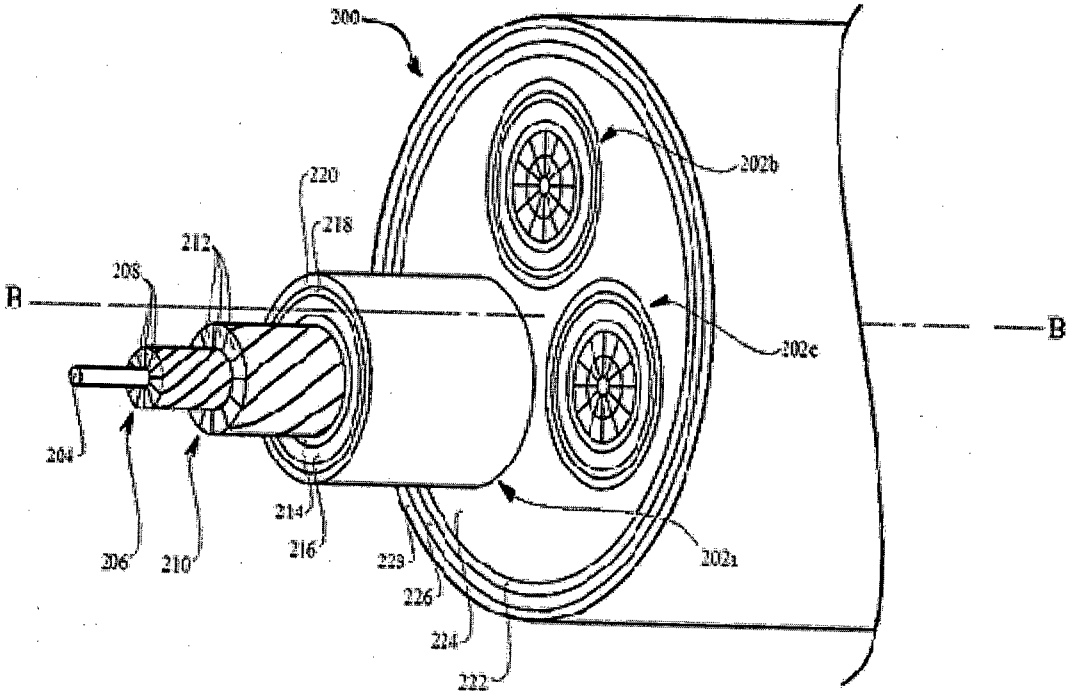
200
202b
220
218
212
208
B
B
202c
204
214
216
206
210
223
226
224
222
202a

Figure 3

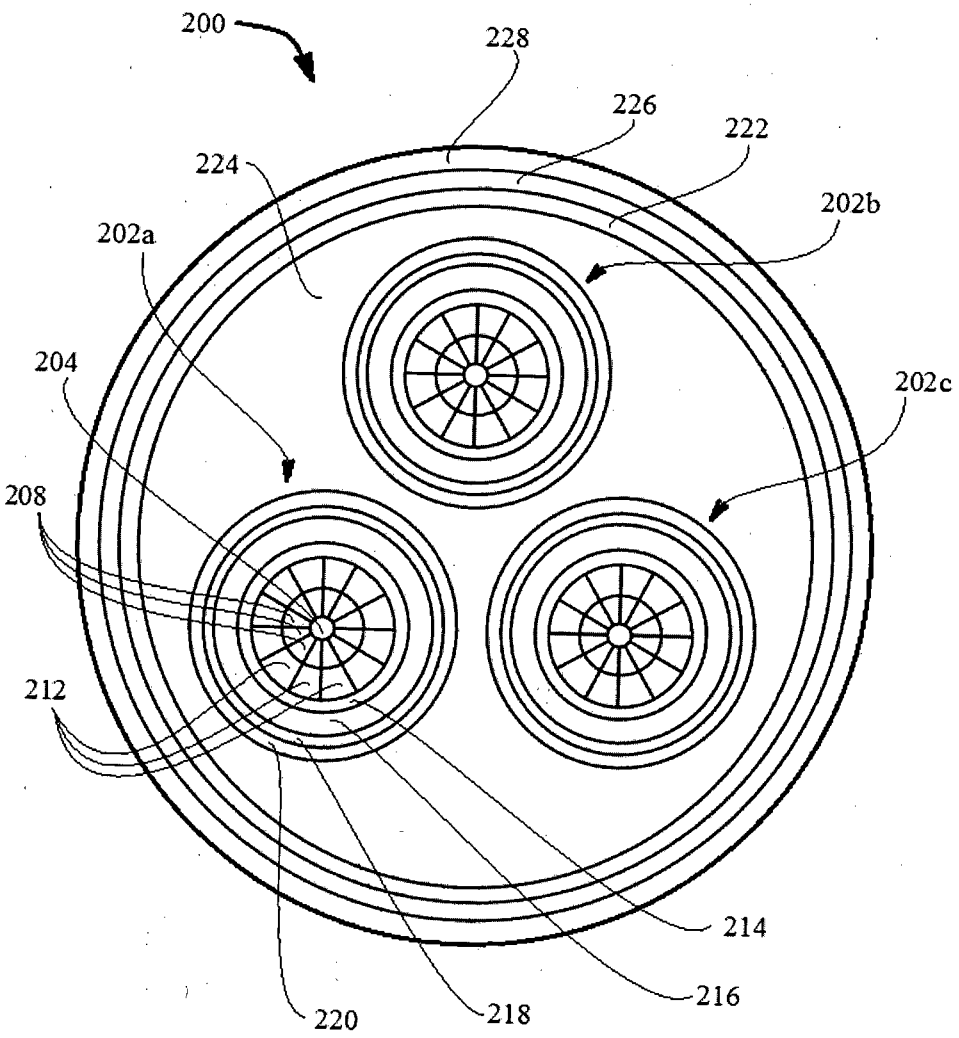

Figure 4