US 20050197593A1

(19) United States

(12) Patent Application Publication

(10) Pub. No.: US 2005/0197593 A1

(43) Pub. Date: Sep. 8, 2005

Burbank et al.

(54) BREAST BIOPSY SYSTEM AND METHODS

(75) Inventors: **Fred H. Burbank**, San Juan Capistrano, CA (US); **Michael L. Jones**, Capistrano Beach, CA (US); **Paul Lubock**, Laguna Niguel, CA (US)

Correspondence Address:
Edward J. Lynch
DUANE MORRIS LLP
One Market
Spear Tower, Suite 2000
San Francisco, CA 94105 (US)

(73) Assignee: **SenoRx, Inc.**

(21) Appl. No.: **11/112,150**

(22) Filed: **Apr. 22, 2005**

Related U.S. Application Data

(60) Continuation of application No. 09/929,371, filed on Aug. 13, 2001, now abandoned, which is a division of application No. 09/057,303, filed on Apr. 8, 1998, now Pat. No. 6,331,166.

(60) Provisional application No. 60/076,973, filed on Mar. 3, 1998.

Publication Classification

(51) **Int. Cl.**[7] **A61B 10/00**; A61B 17/32

(52) **U.S. Cl.** **600/564**; 600/567; 606/167

(57) **ABSTRACT**

An apparatus and method are provided for precisely isolating a target lesion in a patient's body tissue, resulting in a high likelihood of "clean" margins about the lesion when it is removed for diagnosis and/or therapy. This approach advantageously will often result in the ability to both diagnose and treat a malignant lesion with only a single percutaneous procedure, with no follow-up percutaneous or surgical procedure required, while minimizing the risk of migration of possibly cancerous cells from the lesion to surrounding tissue or the bloodstream. In particular, the apparatus comprises a biopsy instrument having a distal end adapted for entry into the patient's body, a longitudinal shaft, and a cutting element disposed along the shaft. The cutting element is actuatable between a radially retracted position and a radially extended position. Advantageously, the instrument is rotatable about its axis in the radially extended position to isolate a desired tissue specimen from surrounding tissue by defining a peripheral margin about the tissue specimen. Once the tissue specimen is isolated, it may be segmented by further manipulation of the cutting element, after which the tissue segments are preferably individually removed from the patient's body through a cannula or the like. Alternatively, the specimen may be encapsulated and removed as an intact piece.

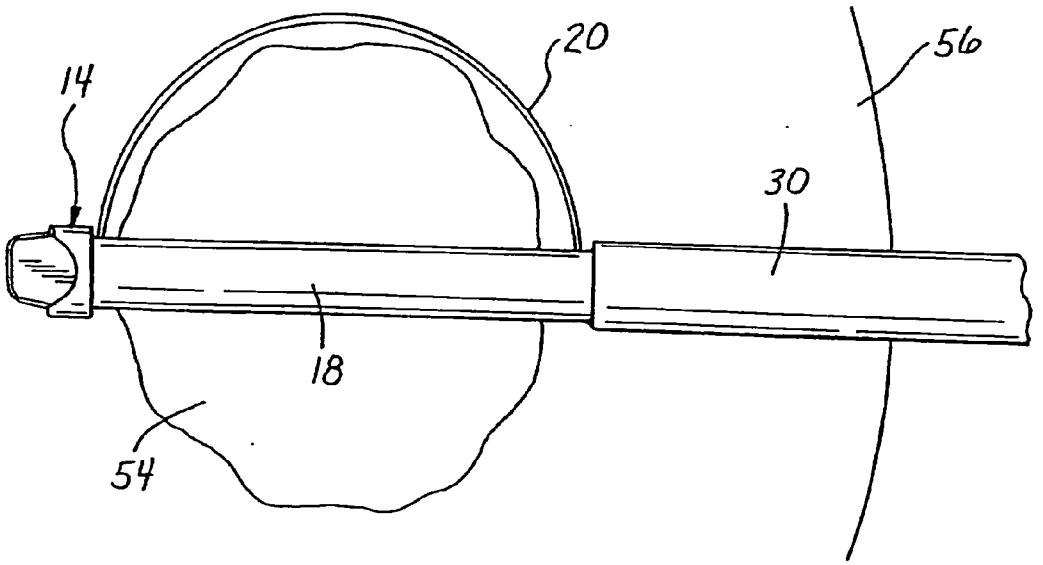

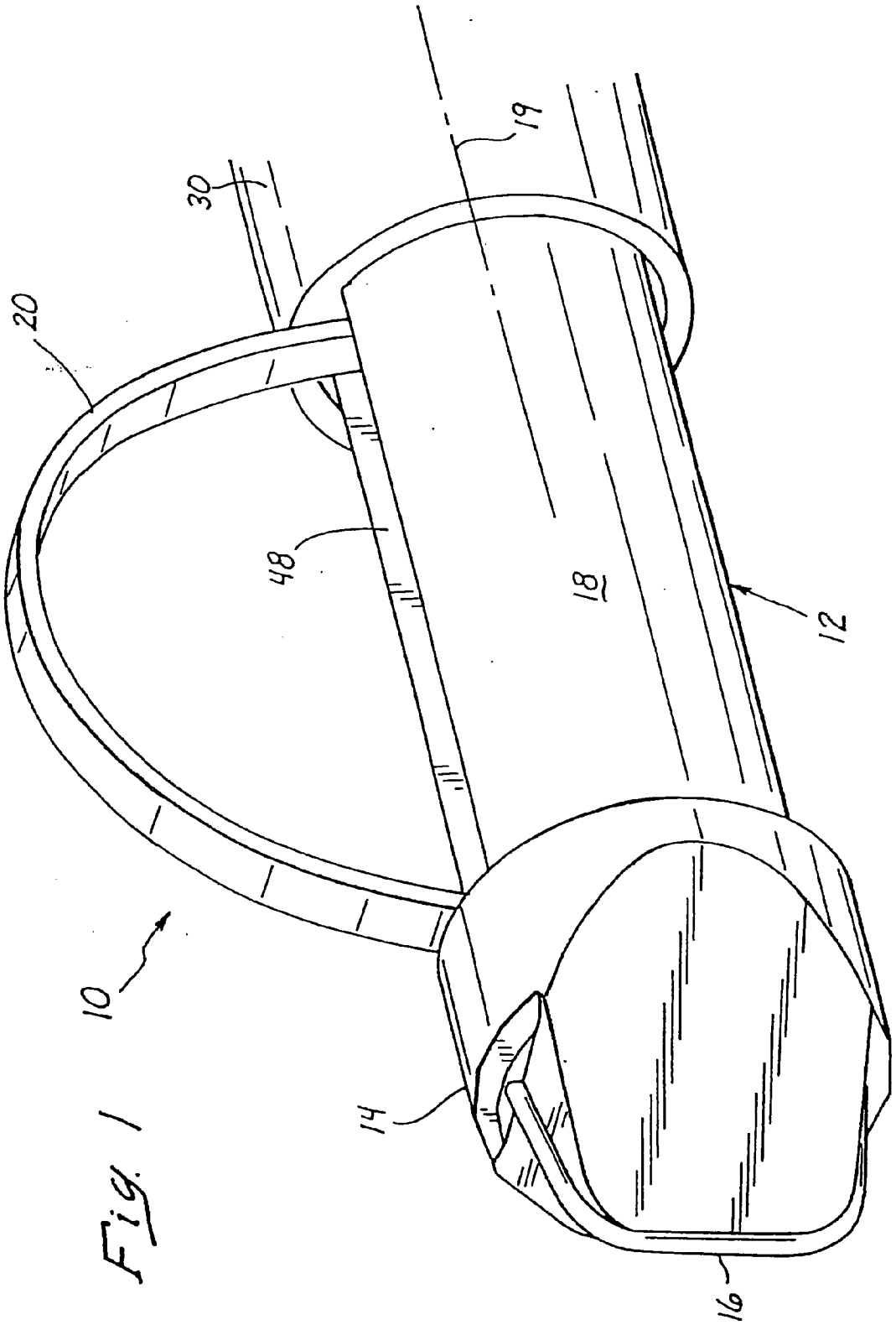

Fig. 1

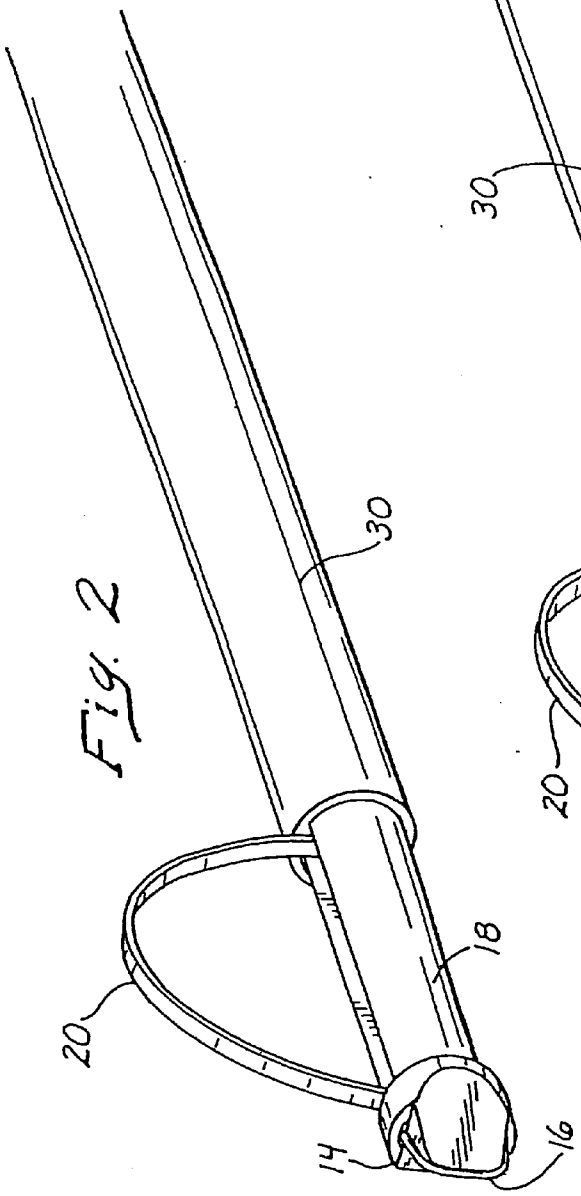

Fig. 2

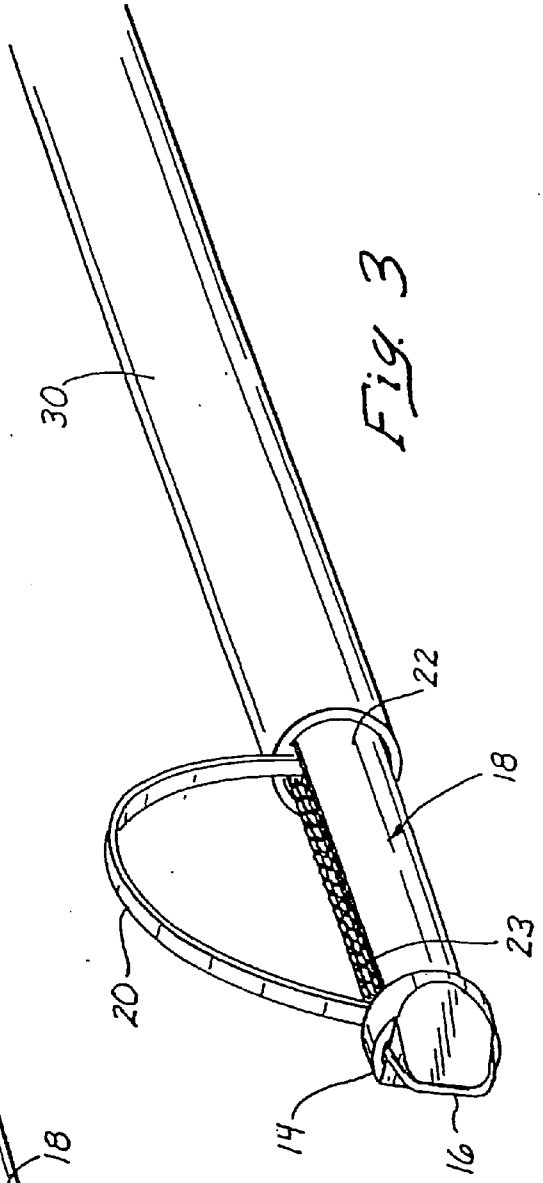

Fig. 3

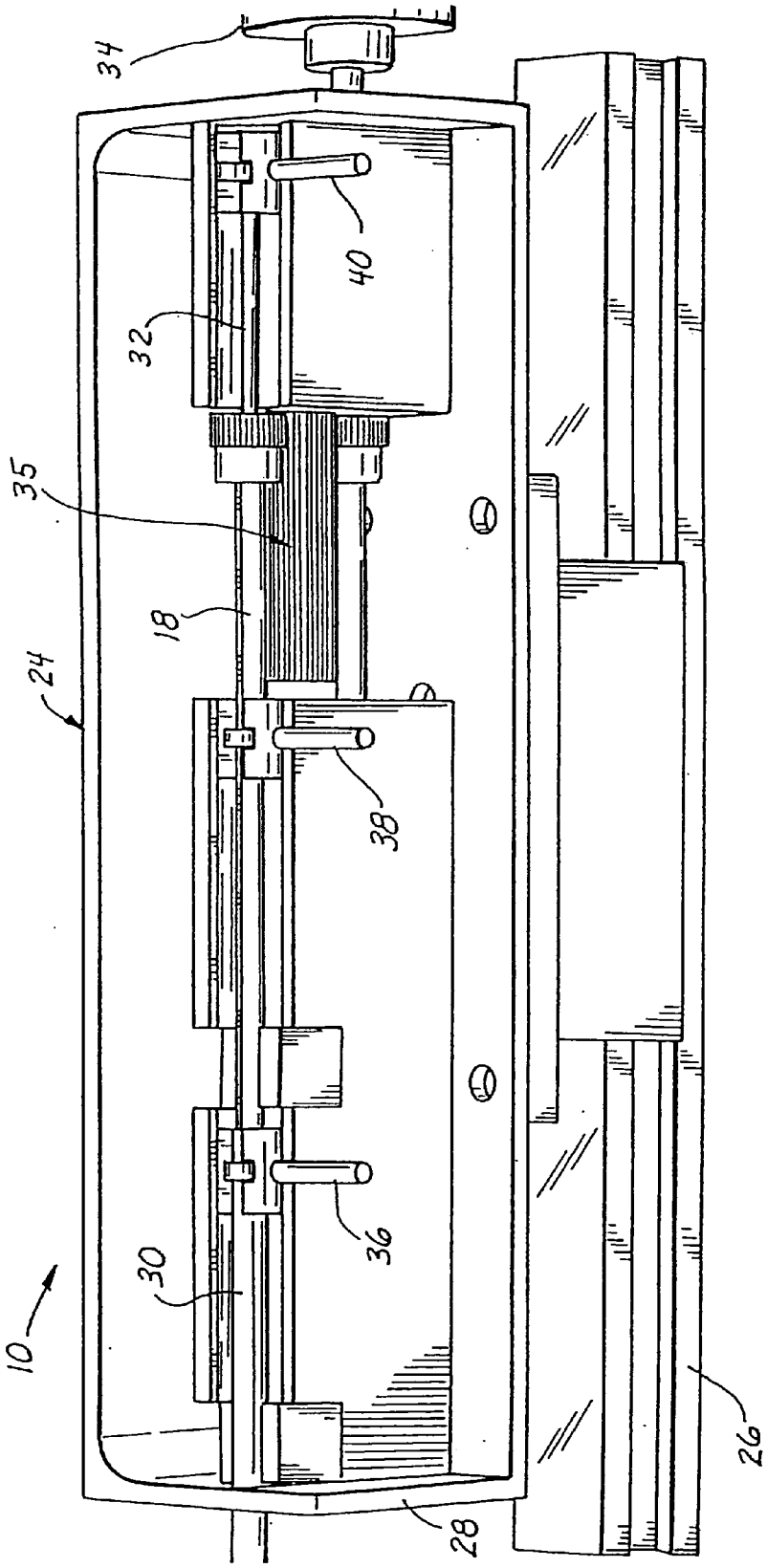

Fig. 4

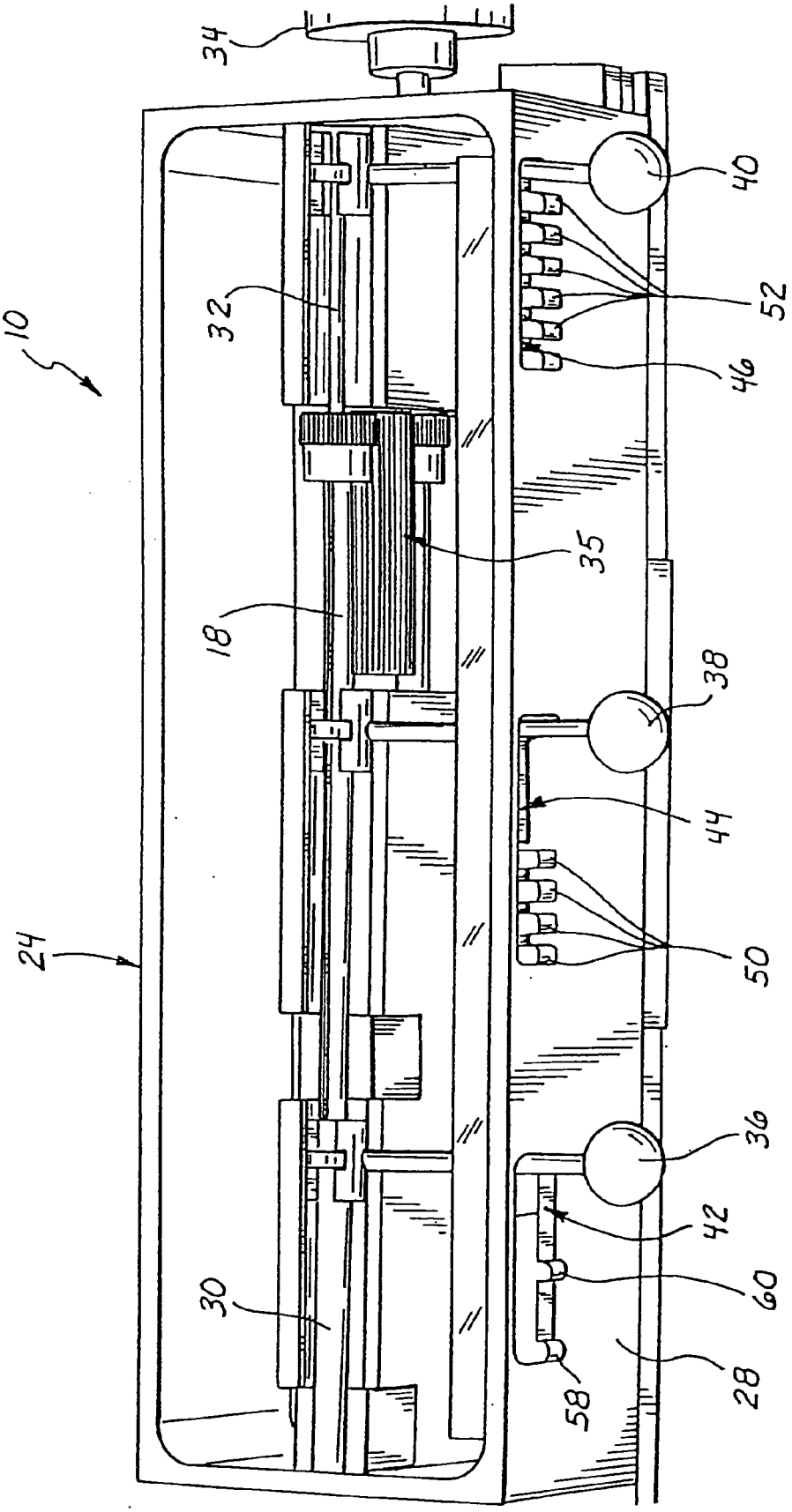

Fig. 5

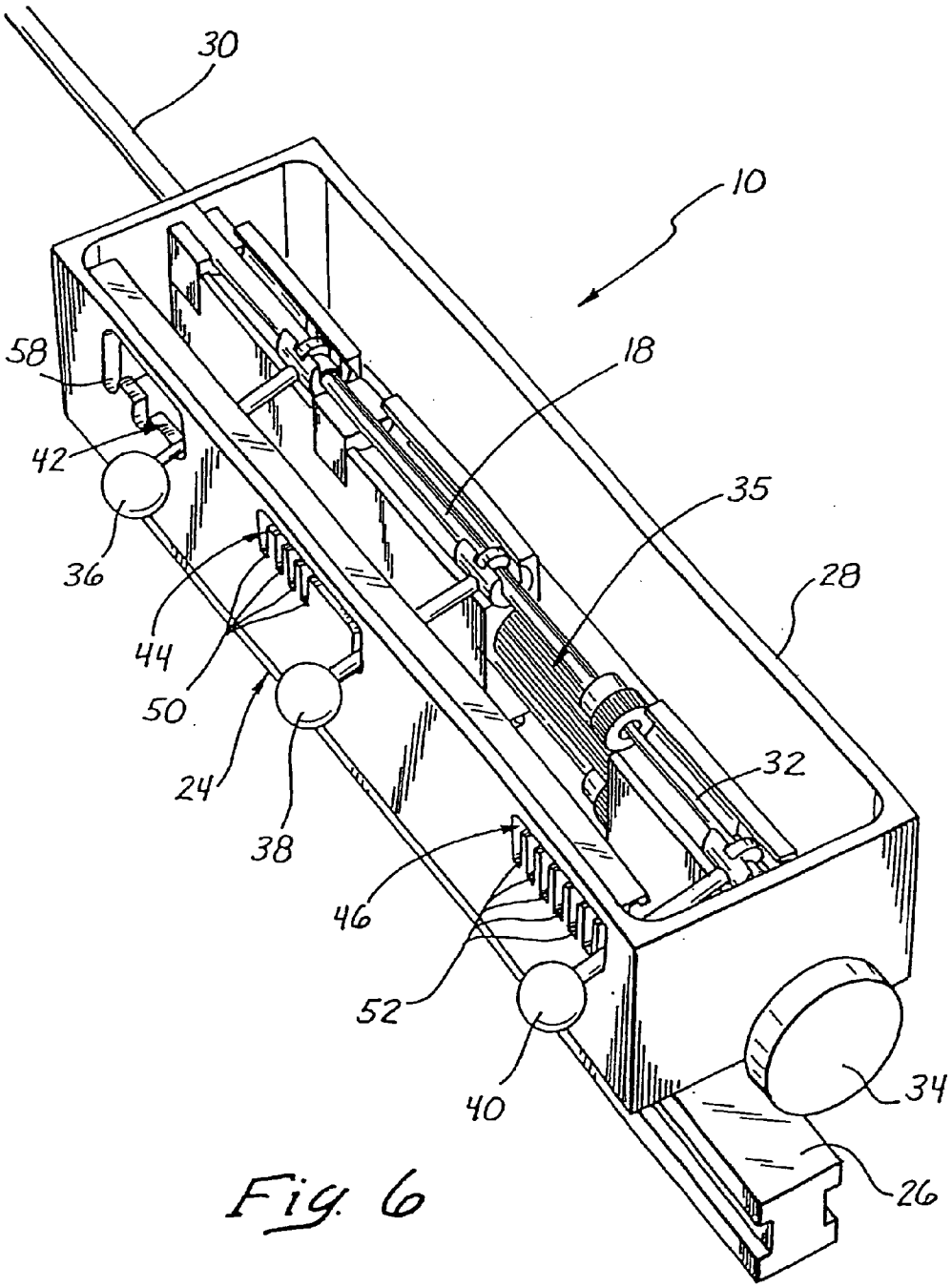

Fig. 6

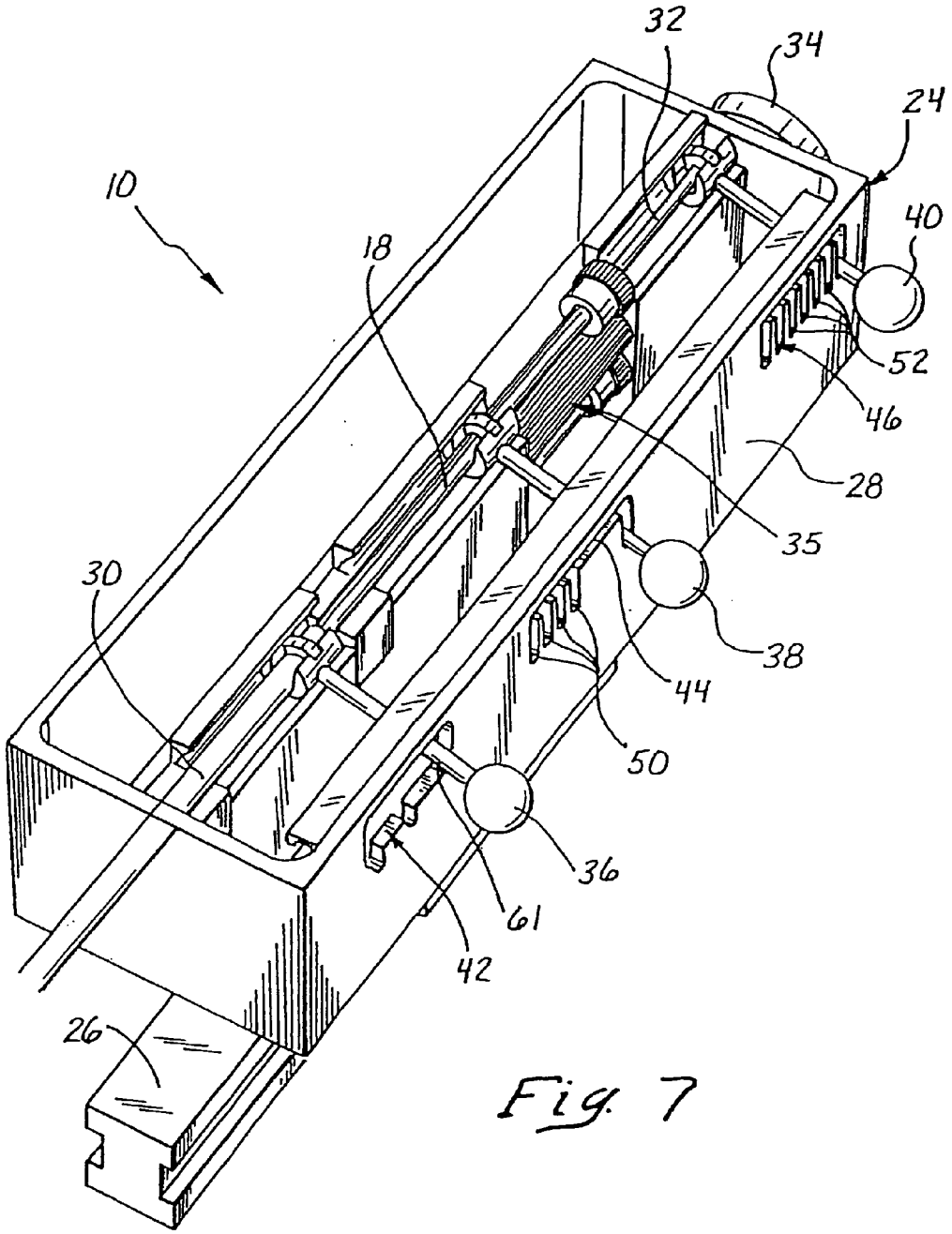

Fig. 7

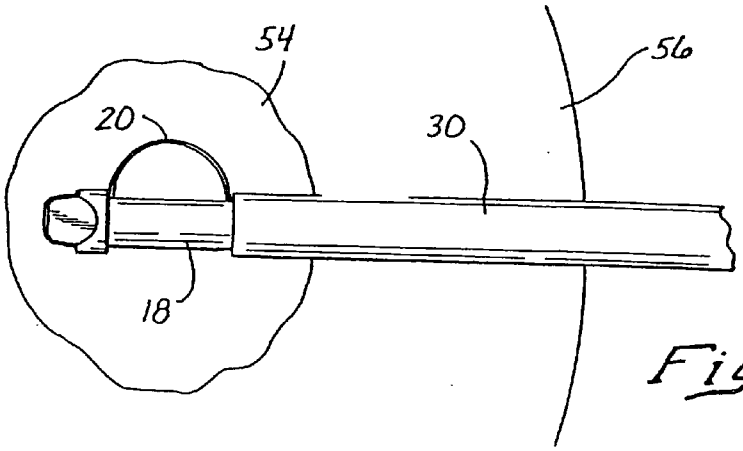

Fig. 8

Fig. 9

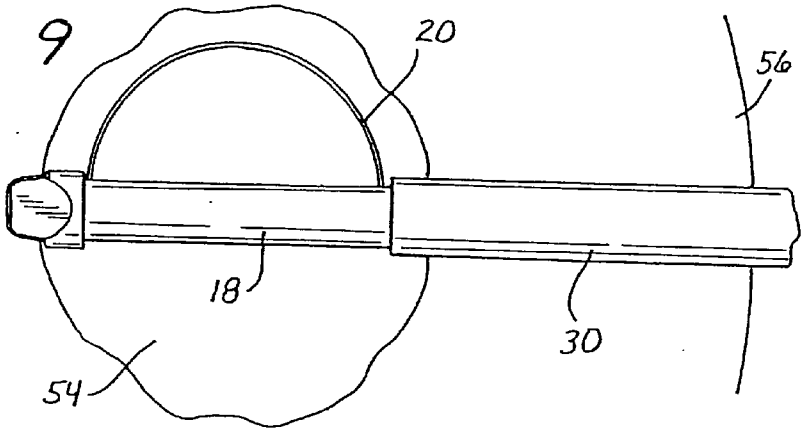

Fig. 10

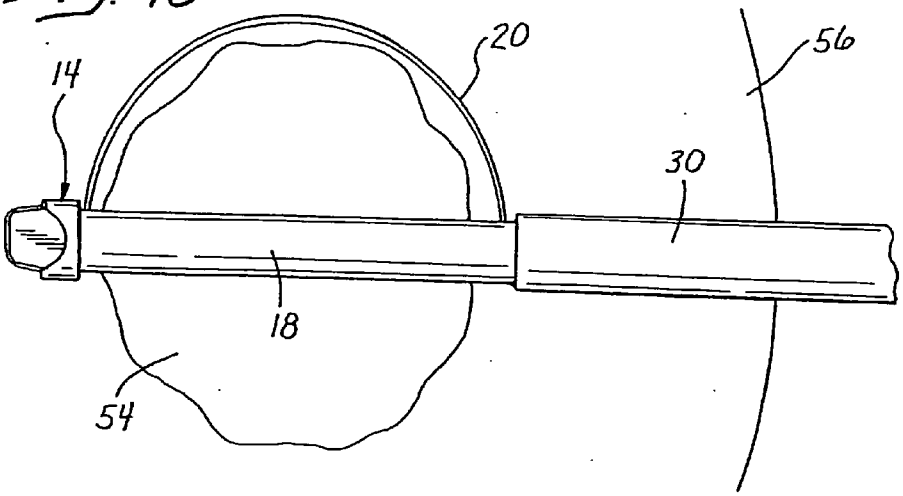

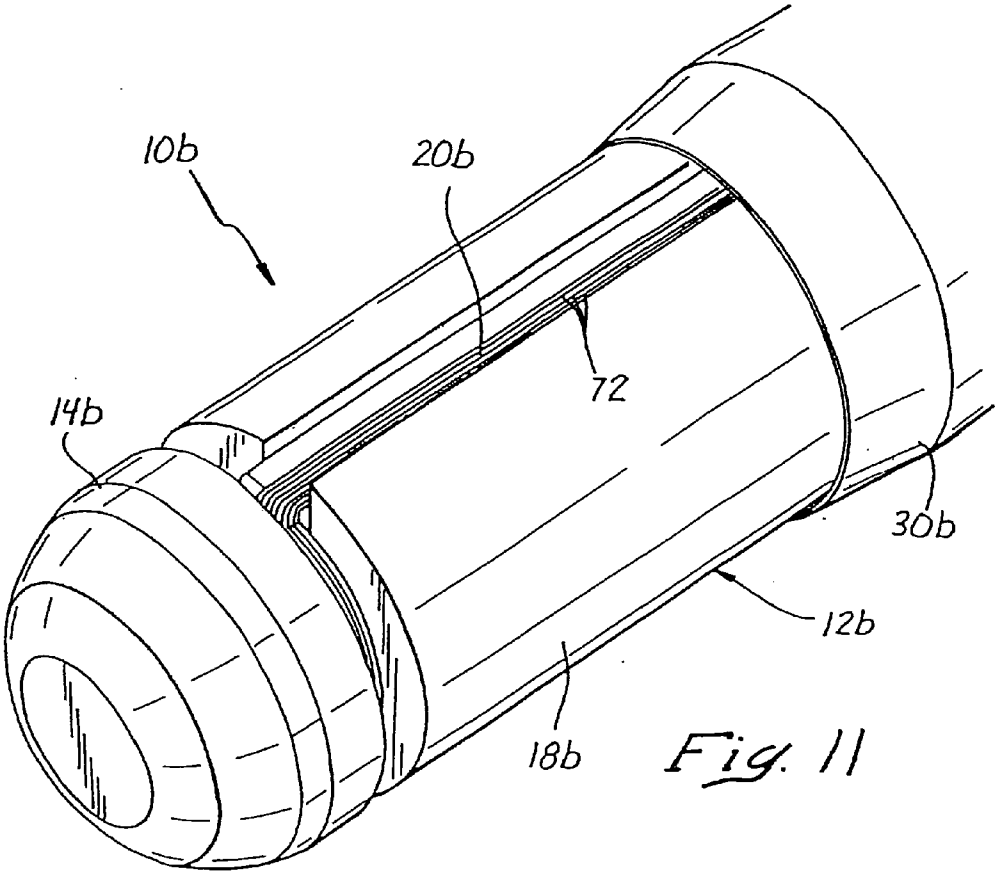

Fig. 11

Fig. 14

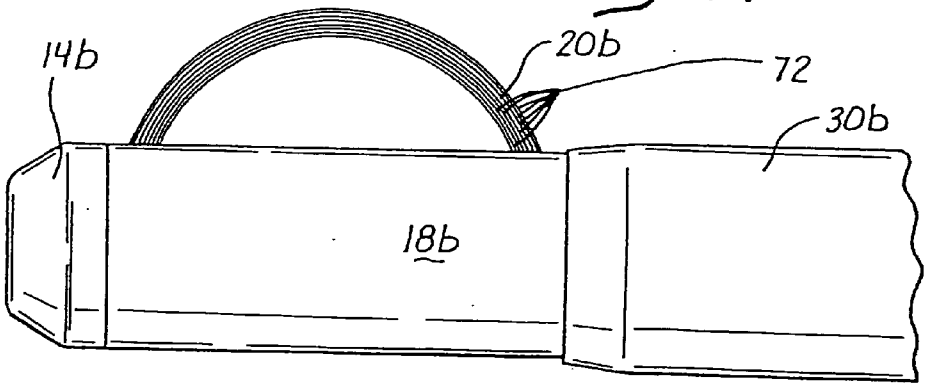

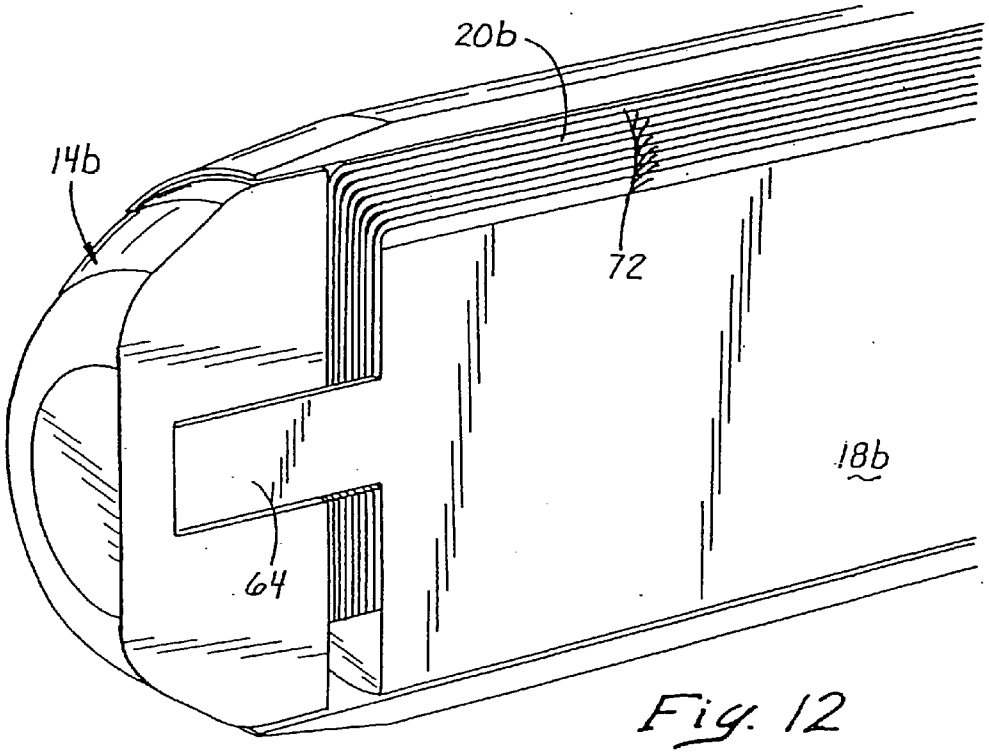

Fig. 12

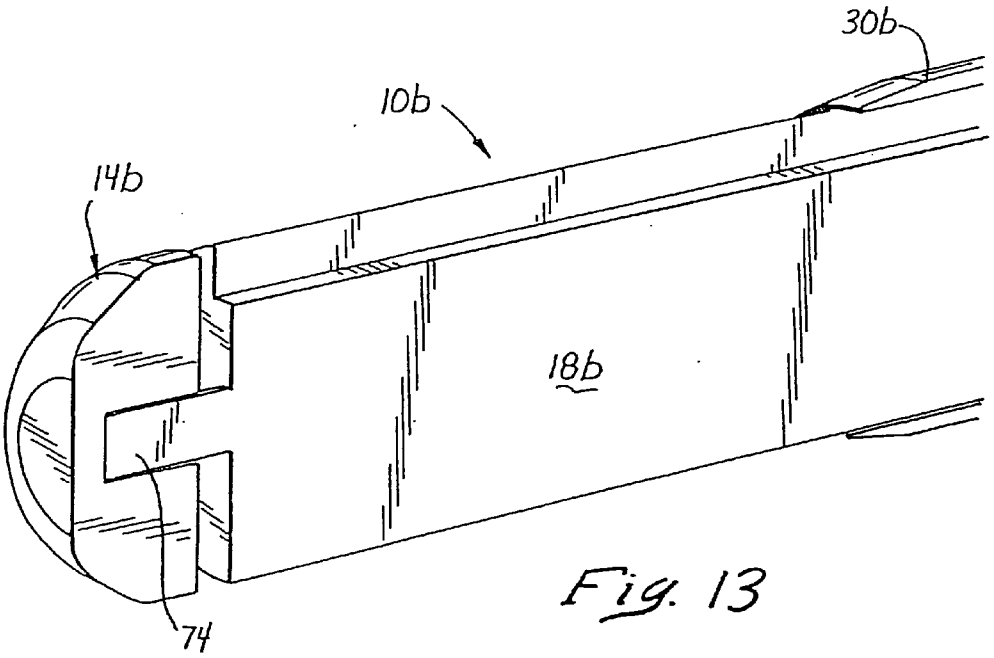

Fig. 13

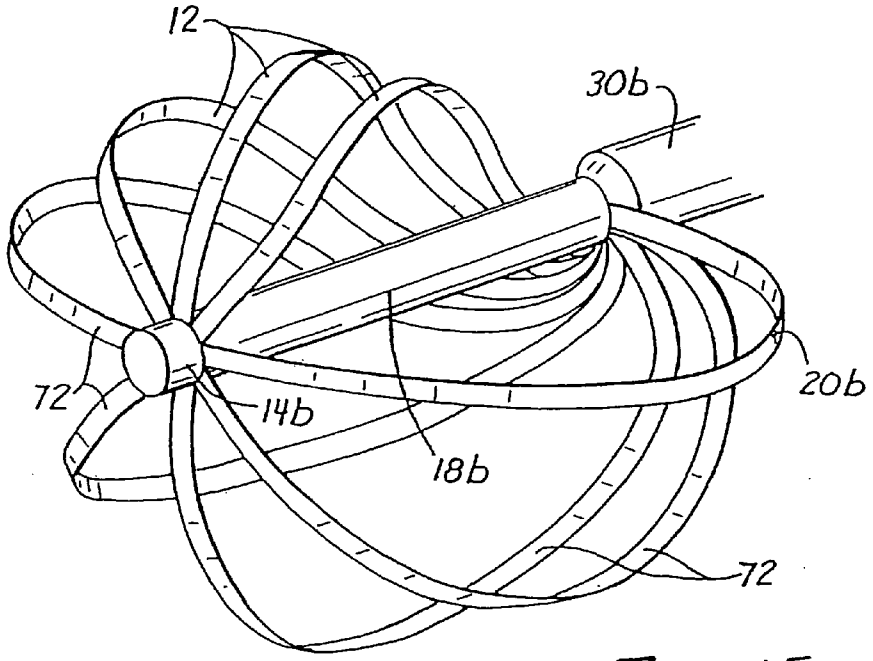

Fig. 15

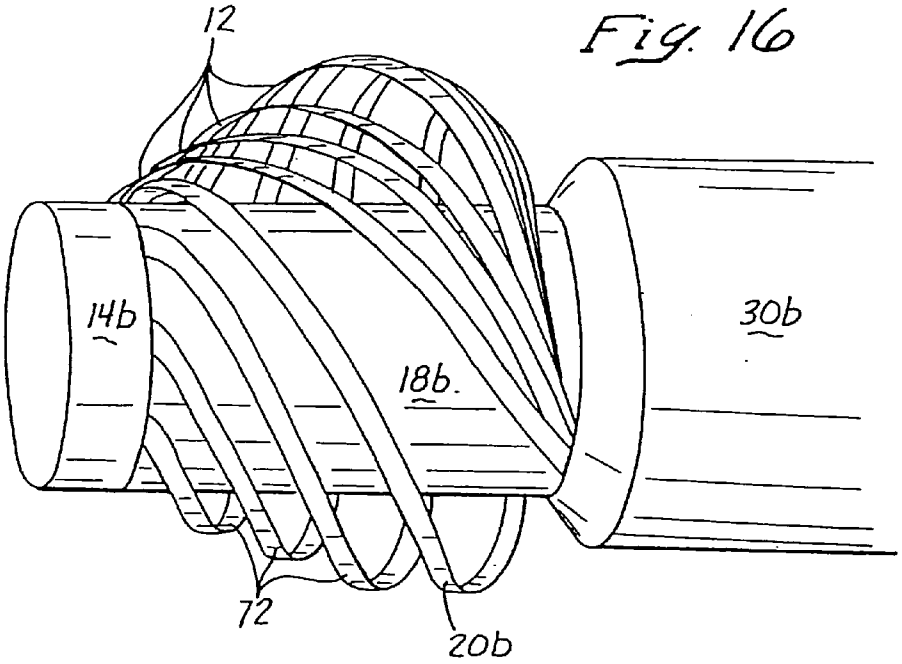

Fig. 16

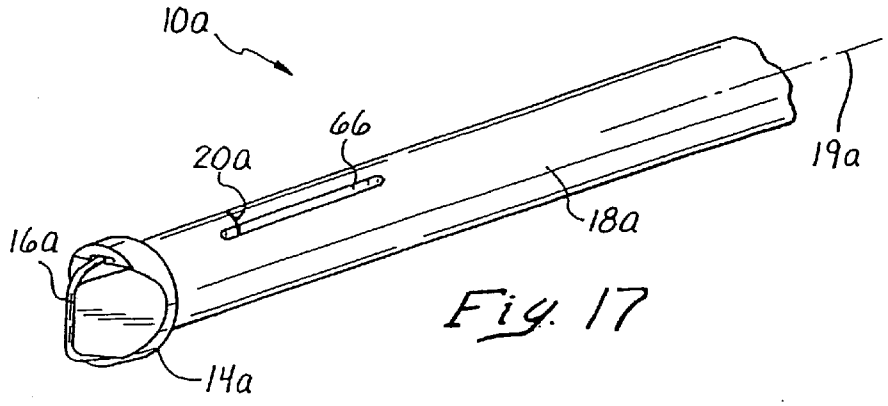

Fig. 17

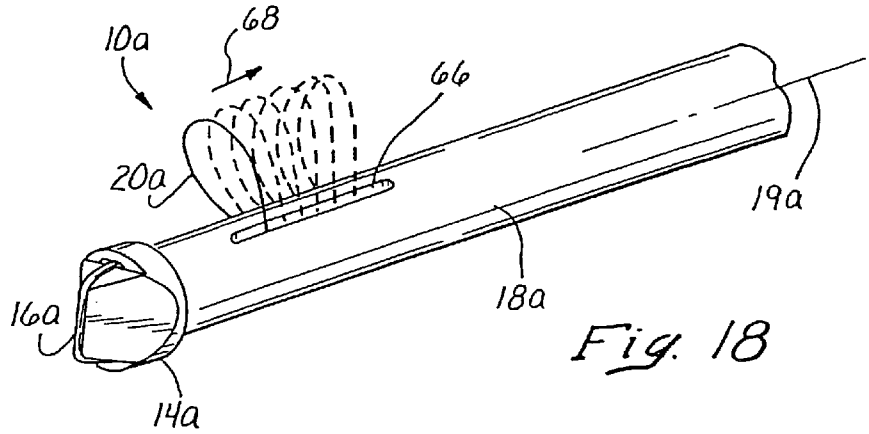

Fig. 18

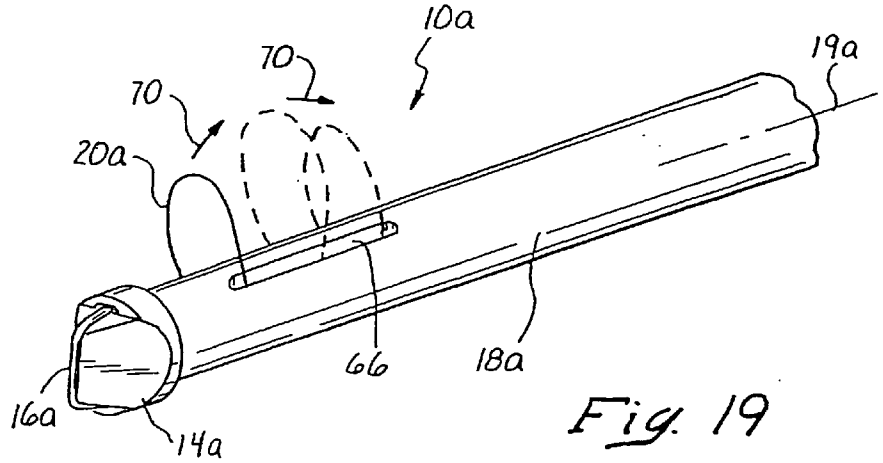

Fig. 19

BREAST BIOPSY SYSTEM AND METHODS

FIELD OF THE INVENTION

[0001] The present invention relates to methods and devices for removing tissue samples, and more specifically to improved instruments and methods for acquiring soft body tissue.

BACKGROUND OF THE INVENTION

[0002] It is often desirable and frequently necessary to sample or remove a portion of tissue from humans and other animals, particularly in the diagnosis and treatment of patients with cancerous tumors, pre-malignant conditions, and other diseases or disorders.

[0003] Typically, in the case of cancer, particularly cancer of the breast, there is a great emphasis on early detection and diagnosis through the use of screening modalities, such as physical examination, and particularly mammography, which is capable of detecting very small abnormalities, often nonpalpable. When the physician establishes by means of a mammogram or other screening modality, such as ultrasound, that suspicious circumstances exist, a biopsy must be performed to capture tissue for a definitive diagnosis as to whether the suspicious lesion is cancerous. Biopsy may be done by an open or percutaneous technique. Open biopsy, which is an invasive surgical procedure using a scalpel and involving direct vision of the target area, removes the entire mass (excisional biopsy) or a part of the mass (incisional biopsy). Percutaneous biopsy, on the other hand, is usually done with a needle-like instrument through a relatively small incision, blindly or with the aid of an artificial imaging device, and may be either a fine needle aspiration (FNA) or a core biopsy. In FNA biopsy, individual cells or clusters of cells are obtained for cytologic examination and may be prepared such as in a Papanicolaou smear. In core biopsy, as the term suggests, a core or fragment of tissue is obtained for histologic examination which may be done via a frozen section or paraffin section.

[0004] The type of biopsy utilized depends in large part on circumstances present with respect to the patient, including the location of the lesion(s) within the body, and no single procedure is ideal for all cases. However, core biopsy is extremely useful in a number of conditions and is being used more frequently by the medical profession.

[0005] A very successful type of image guided percutaneous core breast biopsy instrument currently available is a vacuum-assisted automatic core biopsy device. One such successful biopsy device is shown and disclosed in U.S. Pat. No. 5,526,822 to Burbank et al, expressly incorporated by reference herein. This device, known commercially as the MAMMOTOME® Biopsy System, which is available from Ethicon Endo-Surgery, Inc., a division of Johnson & Johnson, has the capability to actively capture tissue prior to cutting the tissue. Active capture allows for sampling through non-homogeneous tissues. The device is comprised of a disposable probe, a motorized drive unit, and an integrated vacuum source. The probe is made of stainless steel and molded plastic and is designed for collection of multiple tissue samples with a single insertion of the probe into the breast. The tip of the probe is configured with a laterally disposed sampling notch for capturing tissue samples. Orientation of the sample notch is directed by the physician, who uses a thumbwheel to direct tissue sampling in any direction about the circumference of the probe. A hollow cylindrical cutter severs and transports tissue samples to a tissue collection chamber for later testing.

[0006] While this type of system functions very well as a core biopsy device, there are occasions when it may be useful to have the capability of acquiring a relatively large intact tissue sample. One such core biopsy device is disclosed in U.S. Pat. No. 5,111,828, to Kornberg et al., also expressly incorporated by reference herein. In the device disclosed by Kornberg et al., the tissue receiving port is disposed at the distal end of the device and is oriented axially rather than laterally. A disadvantage of this type of device, however, is the inability to acquire a tissue sample having a cross-section larger than that of the cannula through which the sample will be removed. Additionally, it is difficult, using such a device, which obtains cylindrical shaped specimens, to determine whether an entire lesion of interest is being removed or whether a further procedure will be necessary. This is particularly true because most lesions of interest are typically spherical in shape, having a diameter of approximately 1 cm. The only way one can tell whether the entire lesion has been removed using the Kornberg technique is to remove and examine the specimen, determining whether each of the margins of the specimen is "clean", meaning that there is no evidence of lesion, or "dirty", meaning that lesion is evident right to the edge of the specimen. Of course, if one or more specimen margins is "dirty", it is almost a certainty that a portion of the lesion remains in the patient, and if the biopsy test results on the lesion are positive, a further surgical procedure will be indicated.

[0007] It would be desirable, therefore, to have an apparatus and method for isolating a target lesion, with a sufficient border around and beyond the lesion that the likelihood of "clean" margins is relatively high. It would further be advantageous to have an apparatus and method available for initially isolating the entire target lesion, by cutting a swath completely about the lesion to cut off its blood supply; after which a further procedure is undertaken to remove it from the patient's body. This approach would help to minimize the migration of possibly cancerous cells from the lesion to surrounding tissue or bloodstream during the removal procedure.

SUMMARY OF THE INVENTION

[0008] The present invention addresses the foregoing problems by providing such an apparatus and method for precisely isolating a target lesion, resulting in a high likelihood of "clean" margins. This advantageously will often result in the ability to both diagnose and treat a malignant lesion with only a single percutaneous procedure, with no follow-up percutaneous or surgical procedure required, while minimizing the risk of migration of possibly cancerous cells from the lesion to surrounding tissue or the bloodstream.

[0009] More particularly, in one aspect of the invention, a biopsy instrument is provided for retrieving body tissue, which instrument has a longitudinal axis. The instrument comprises a distal end adapted for entry into a patient's body, a shaft disposed along the axis, and a cutting element disposed along the shaft. The cutting element is actuatable

between a radially retracted position and a radially extended position. Advantageously, the instrument is rotatable about its axis in the radially extended position to isolate a desired tissue specimen from surrounding tissue by defining a peripheral margin about the tissue specimen. Once the tissue specimen is isolated, it may be segmented by further manipulation of the cutting element, after which the tissue segments are preferably individually removed from the patient's body through a cannula or the like. Alternatively, the specimen may be encapsulated and removed as an intact piece.

[0010] In another aspect of the invention, an instrument is provided for retrieving body tissue, having a longitudinal axis and comprising a distal end adapted for entry into a patient's body. The instrument further comprises an element for encapsulating a tissue specimen so that it may be withdrawn as a single unit from the patient's body. The encapsulating element preferably comprises a plurality of bands disposed along the instrument axis, each of which are actuatable between a radially retracted position and a radially extended position.

[0011] In yet another aspect of the invention, a method is disclosed for retrieving a tissue specimen from a patient's body, comprising the steps of inserting an instrument having a distal end, a longitudinal axis, and an axially disposed cutting element, into the patient's body, so that a distal end is disposed in a tissue region from which the tissue specimen is to be taken. The cutting element is radially expanded so that a portion thereof is radially outwardly spaced from the axis of the instrument. Once the cutting element is radially expanded, it is rotated about the axis to cut the tissue and create a peripheral boundary about the tissue specimen, to isolate the tissue specimen from surrounding tissue in the tissue region.

[0012] The invention, together with additional features and advantages thereof, may best be understood by reference to the following description taken in conjunction with the accompanying illustrative drawing.

BRIEF DESCRIPTION OF THE DRAWING

[0013] **FIG. 1** is a perspective view of the distal end of one preferred embodiment of the inventive tissue retrieval instrument;

[0014] **FIG. 2** is a perspective view illustrating the distal end of a monopolar embodiment of the inventive tissue retrieval instrument shown in **FIG. 1**;

[0015] **FIG. 3** is a perspective view similar to that of **FIG. 2**, illustrating the distal end of a bipolar embodiment of the inventive tissue retrieval instrument shown in **FIG. 1**;

[0016] **FIG. 4** is a cutaway view from the side illustrating the internal construction of a presently preferred proximal drive unit for operating the inventive tissue retrieval instrument;

[0017] **FIG. 5** is a perspective view from the top illustrating the proximal drive unit of **FIG. 4**, with the top portion of the housing removed in order to show portions of its internal construction;

[0018] **FIG. 6** is a perspective view from the proximal end illustrating the proximal drive unit of **FIGS. 4 and 5**, with the top portion of the housing removed in order to show portions of its internal construction;

[0019] **FIG. 7** is a perspective view from the distal end illustrating the proximal drive unit of **FIGS. 4-6**, with the top portion of the housing removed in order to show portions of its internal construction;

[0020] **FIG. 8** is a schematic view illustrating the distal end of the instrument of **FIG. 1** disposed in a tissue region from which target tissue is to be retrieved, wherein the distal cutting element is deployed in a first position for isolating a first segment of a target tissue specimen from surrounding tissue;

[0021] **FIG. 9** is a schematic view similar to **FIG. 8**, wherein the distal cutting element is deployed in a second position for isolating a second segment of the target tissue specimen from surrounding tissue;

[0022] **FIG. 10** is a schematic view similar to **FIGS. 8 and 9**, wherein the distal cutting element is deployed in a third position for isolating a third segment of the target tissue specimen from surrounding tissue;

[0023] **FIG. 11** is a perspective view illustrating the distal end of a second preferred embodiment of the inventive tissue retrieval instrument;

[0024] **FIG. 12** is a perspective cutaway view of the distal end of the embodiment of **FIG. 11**, illustrating the internal construction thereof, including tissue wrapping and cutting elements in their stored position;

[0025] **FIG. 13** is a perspective cutaway view similar to that of **FIG. 12**, wherein the sheath has been retracted in order to deploy the tissue wrapping and cutting elements shown in **FIG. 12**;

[0026] **FIG. 14** is a side schematic view of the distal end of the embodiment of **FIGS. 11-13**, illustrating the deployment of the tissue wrapping and cutting elements shown in **FIG. 12**;

[0027] **FIG. 15** is a perspective view illustrating the tissue wrapping and cutting elements of **FIGS. 12 and 14** in their fully deployed position;

[0028] **FIG. 16** is a side view showing the deployed tissue wrapping and cutting elements after the distal end of the instrument has been rotated to twist the wrapping and cutting elements in order to wrap a target tissue sample;

[0029] **FIG. 17** is a perspective, schematic view of an alternative embodiment of the distal end of the inventive tissue retrieval instrument, wherein the cutting element of the instrument is in a retracted position;

[0030] **FIG. 18** is a perspective, schematic view similar to **FIG. 17**, illustrating the cutting element in a deployed position for creating cylindrical tissue segments; and

[0031] **FIG. 19** is a perspective, schematic view similar to **FIGS. 17 and 18**, illustrating the cutting element in a deployed position for creating tissue segments of varying heights.

DESCRIPTION OF THE INVENTION

[0032] Referring now more particularly to **FIG. 1**, there is shown the distal end **12** of a first preferred embodiment of

an inventive tissue retrieval or biopsy instrument **10**. The distal end **12** preferably comprises a disposable wand portion, including a distal tip **14**. The tip **14** may comprise a conventional trocar tip, or, preferably, may include an electrosurgical (RF) element or wire **16** which may be energized by a conventional electrosurgical generator (not shown) in order to facilitate tissue cutting and consequent advancement of the instrument **10** to a predetermined tissue site in the patient's body.

[**0033**] Proximally of the tip **14** is a shaft **18**, preferably lying along an axis **19** (**FIG. 1**) of the instrument, on which is disposed a cutting element or wire **20**. This wire **20** is disposed axially along the length of the shaft **18** in its retracted position (not shown), but may be deployed radially outwardly, as shown in **FIG. 1**. The element **20** is preferably comprised of a wire or rectangular band fabricated of memory metal such as Nitinol, though stainless steel, tungsten, or other biocompatible materials could also be employed, if desired. The cutting element **20** acts as an electrosurgical cutter, energizable by means of RF energy provided by the electrosurgical generator discussed supra. The instrument **10** may be monopolar, as illustrated in **FIG. 2**, with the cutting element **20** comprising the active electrode and a return electrode spaced from the instrument **10** and most typically being disposed on the patient's skin in the form of a patch electrode on the thigh or back. Alternatively, the instrument **10** may preferably be bipolar, as illustrated in **FIG. 3**, with the cutting element comprising the active electrode and a return electrode **22** being disposed on the instrument in close proximity to the active electrode, such as along the shaft **18**. With such an arrangement, a layer of insulation **23** is disposed between the return electrode (comprising a major portion of the surface area of the shaft **18**) and the portion of the shaft adjacent to the active electrode, which receives the cutting element **20** in its retracted position. The bipolar embodiment is generally preferred because of a greater safety factor and lower power requirements.

[**0034**] A plurality of cutting wires **20** may be employed if desired, preferably spaced circumferentially about the shaft **18**. In some embodiments, it may be preferably to have webs between the cutting elements, to create a "sail" rather than entire distinct separate cutting elements.

[**0035**] Referring now more particularly to **FIGS. 4-7**, a proximal reusable driver portion **24** for the distal end or disposable wand portion **12** is shown. The driver portion **24** is preferably disposed on a stereotactic rail **26**, in known fashion, for guidance of the instrument **10** to a predetermined tissue site using known imaging techniques. Such stereotactic imaging systems are available, for example, from Fischer, Inc. or Lorad, Inc. Alternative imaging systems, such as mammographic, ultrasonic, CT, MRI guidance systems may be used in place of a stereotactic system, if desired. Additionally, the instrument may be guided to the lesion site using an articulating arm system or manually, rather than on a stereotactic rail.

[**0036**] The reusable driver portion **24** comprises a housing **28** within which is disposed a coaxial arrangement comprising an outer sheath **30**, the shaft **18**, and a rod **32** which is attached at its distal end to the cutter element **20**. A knob **34** is rotatably attached to the shaft **18** through a gearing system **35** to rotate the shaft **18** as desired, for the purpose of circumferentially orienting and rotating the cutting element **20**. Three levers **36**, **38**, and **40** extend outwardly through slots **42**, **44**, and **46**, respectively, in the side of the housing **28**. The first lever **36** is actuatable to slide the sheath **30** axially both proximally and distally, for a purpose to be described hereinbelow. The second lever **38** is actuatable to move the shaft **18** axially in distal and proximal directions, as desired. The third lever **40** is actuatable to move the rod **32** axially in distal and proximal directions, as desired. Since the rod **32** is attached at its distal end to the proximal end of the wire cutter **20**, movement of the rod **32** in an axial direction also causes the proximal end of the wire cutter **20** to move in an axial direction. Since the distal end of the cutter **20** is anchored to the shaft **18**, movement of the proximal end of the cutter element **20** in a distal direction causes the midportion of the cutting element **20** to bow radially outwardly to a radially expanded position, as shown in any of **FIGS. 1-3**, while movement of the proximal end of the cutter element **20** in a proximal direction causes the midportion of the cutter element **20** to retract radially to its stowed position, disposed linearly along the axial length of the shaft **18**, preferably within a recess **48** (**FIG. 1**).

[**0037**] An advantageous feature of the invention is the employment of a series of stops **50** in the second slot **44**, and a series of stops **52** in the third slot **46**, as illustrated in **FIGS. 5-7**. The stops **50** enable the second lever **38** to be actuated to a plurality of discrete axial positions, which in turn permits the shaft **18** to be actuated to a corresponding plurality of discrete axial positions for fine tuning the axial position of the electrosurgical cutting element **20**. Similarly, the stops **52** enable the third lever **40** to be actuated to a plurality of discrete axial positions, which in turn permits the electrosurgical cutting element **20** to be radially extended to a corresponding plurality of radially extended positions, for a purpose to be described more fully hereinbelow.

[**0038**] With reference now more particularly to **FIGS. 8-10**, the operation of the first preferred embodiment of the inventive device will be explained. Initially, when it is determined that either a diagnostic or therapeutic biopsy procedure is indicated, the distal disposable wand portion **12** of the instrument **10** will be moved axially to a position wherein the distal tip is adjacent to and preferably within a target lesion **54**, using the stereotactic rail **26** and associated imaging system. During this process step, wherein gross linear movement of the wand **12** is controlled by the rail system **26**, the electrosurgical cutting element **16** on the distal tip **14** is energized to pierce and cut through the patient's body tissue **56** to permit distal advancement of the wand **12** to the region surrounding the lesion **54**.

[**0039**] Once the distal tip **14** is generally in the desired position adjacent to or within the target lesion **54**, using the stereotactic rail **26**, the second lever **38** is actuated to provide fine tuning of the axial position of the distal tip **14** relative to the lesion **54**, by Moving the shaft **18** axially to a desired position, and securing the lever **38** in an appropriate stop **50** to maintain the desired axial position. This fine axial adjustment of the axial movement of the shaft **18** is performed using appropriate imaging equipment. The objective of this process step is to ensure that the distal end of the cutting wire **20** is disposed distally of the distal peripheral edge of the lesion **54**, while at the same time the proximal end of the cutting wire **20** is disposed proximally of the proximal peripheral edge of the lesion **54**. This will ensure the ability to isolate the entire lesion **54** during the cutting procedure,

with sufficient margins to minimize the chance that any portion of the lesion inadvertently remains behind in the patient's body following removal thereof.

[0040] When the distal tip **14** is in the precise position desired by the practitioner, first lever **36**, which is normally disposed in a first detent **58 (FIGS. 5 and 6)** in the first slot **42**, is actuated proximally until it rests in a second detent **60 (FIG. 5)** in the first slot **42**. This action retracts the sheath **30** proximally a sufficient distance to partially uncover the cutting element **20**. It should be noted, however, that in some circumstances it may be desirable to fully retract the sheath, so that the entire cutting element **20** is released, in order to create a different cutting geometry. In such an instance, a detent **61 (FIG. 7)** is provided within the slot **42** to accommodate the lever **36** in the fully proximal position necessary to achieve full axial retraction of the sheath. Additional intermediate detents **60** (not shown) may be provided to retract the sheath to intermediate positions corresponding to various partial radial extension positions of the cutting element.

[0041] After the sheath **30** is retracted as desired, the third lever **40** may then be actuated distally along the third slot **46** to an intermediate stop **52**, thereby causing the rod **32**, and therefore the proximal end of the cutting element **20**, to move axially a distance equivalent to that traversed by the lever **40**. This, of course, results in the partial radial expansion of the cutting element **20** to an arched or bowed configuration as shown in **FIG. 8**. The extended configuration of the cutting element **20** may define, when rotated about the instrument axis, a spherical cutting volume, as shown, or it may be configured to define an elliptical or toroidal cutting volume when the cutting element is rotated about the instrument axis **19**, rather than a spherical volume.

[0042] Of course many other mechanisms for radially expanding the cutting element **20** may be utilized as well, within the scope of the invention. For example, since the wire **20** is preferably fabricated of a shaped memory or superelastic material, the proximal retraction of the sheath **30**, and resultant release of the wire **20**, may be sufficient to cause the cutting wire **20** to radially expand to its desired position.

[0043] Once the cutting element **20** is partially radially expanded as described supra, an inner portion of the target lesion **54** is isolated from surrounding tissue. To complete this step, the cutting element **20** is energized by the electrosurgical generator (not shown), after which the knob **34** is rotated, either manually or via a motorized drive mechanism, to rotate the cutting element **20** through a 360 degree arc. This rotational cutting action functions to completely sever the inner portion of the tissue sample from the surrounding tissue, thereby cutting off all blood supply to the inner tissue sample. Alternatively, if desired, the cutting element **20** may be simultaneously rotated and moved axially, by moving the shaft **18** axially, in order to create a "corkscrew"-shaped tissue segment.

[0044] Once this initial isolation step is completed, the cutting element or wire **20** is preferably further radially extended to the position shown in **FIG. 9**. This is accomplished by sliding the lever **36** proximally to another detent **60** to further proximally retract the sheath **30**. Then, the third lever **40** may be axially slid distally to another stop or detent **52** to further radially extend the cutting wire **20**. Once radially positioned, the cutting element **20** is energized by the electrosurgical generator, after which the knob **34** is rotated to rotate the cutting element **20** through a 360 degree arc. This rotational cutting action functions to completely sever a second segment of the tissue sample from the surrounding tissue, thereby cutting off all blood supply to this segment as well.

[0045] These steps may be repeated as many times as desired, in order to ensure that the tissue sample is segmented for efficient removal from the patient's body. Ultimately, however, a final cut is preferably made, by fully retracting the outer sheath **30**, using the slide lever **36**, and fully extending the cutting wire **20**, using the slide lever **40**, so that the cutting element **20** extends radially beyond the periphery of the target lesion **54**, as illustrated in **FIG. 10**. The cutting element is then energized with RF energy, in the same manner as previously, after which the knob **34** is rotated to rotate the cutting wire **20** through a complete arc about the axis **19**. At this point, the entire lesion **54** should be completely isolated from surrounding tissue, with a sufficient margin about the outer periphery thereof to ensure successful removal of the entire lesion.

[0046] During the foregoing segmentation process, if the cutting element **20** remains charged by RF energy during the stepwise radial extension process, the outer tissue rings will be further segmented radially.

[0047] Other segmentation approaches may be advantageously utilized as well, if desired. For example, rather than segmenting the tissue sample circumferentially, from the inside out, the tissue sample may be segmented circumferentially from the outside in, i.e. by making an outer circumferential cut **(FIG. 10)**, then partially retracting the cutting element **20** and cutting additional layers, as shown in **FIGS. 8 and 9**. Alternatively, the tissue may be sectioned by extending and retracting the cutting element **20** radially, akin to "sectioning an orange". Additional radially oriented cutting elements could be employed as well to further segment the tissue.

[0048] An alternative approach to segmenting the tissue specimen to be retrieved is illustrated in the embodiment shown in **FIGS. 17-19**. In this embodiment, wherein like elements to those in the embodiment of **FIG. 1** are designated by like reference numerals, succeeded by the letter a, there is shown a tissue retrieval or biopsy instrument **10*a***, having a distal tip **14*a*** with an electrosurgical element or wire **16*a*** for cutting tissue and thereby permitting advancement of the instrument into a patient's body. A shaft or cannula **18*a*** is disposed along an axis **19*a*** of the instrument. A longitudinal slot **66** is disposed axially along a portion of the length of the cannula **18*a*** A cutting element or wire **20*a***, which is preferably an electrosurgical cutting element, is disposed so as to be extendable from and retractable into the slot. The cutting element is shown in a retracted position in **FIG. 17**, and in an extended position in **FIGS. 18 and 19**.

[0049] In operation, once the instrument **10*a*** has been positioned so that the distal tip is adjacent to a lesion to be removed, in the manner described supra with respect to the embodiment of **FIG. 1**, the cutting element **20*a*** is charged with RF energy from a proximally disposed electrosurgical generator (not shown). Then, the cutting element **20*a*** is radially extended by the practitioner, using a proximal control mechanism (not shown), to a position as shown, for

example, in **FIG. 18**. Once extended, the cutting element is moved axially in a proximal direction along the slot **66**, as illustrated by the arrow **68** and the phantom images of the cutting element **20***a*, in order to isolate a generally cylindrical tissue segment, as the cannula **18***a* is rotated about its axis **19***a* simultaneously.

[**0050**] **FIG. 19** illustrates a procedure similar to that illustrated in **FIG. 18**, except that while the cutting element **20***a* is being axially moved in a proximal direction as shown by arrows **70**, it is also deployed to various radial heights, in order to create a variable height cut.

[**0051**] Once segmentation of the tissue sample has been completed, whichever embodiment has been employed, each tissue segment can be withdrawn using a suitable retrieval apparatus. Preferably, the tissue segments are withdrawn through a cannula, such as the sheath **30**, using such means as a suction grasper, flexible mechanical graspers, an auger conveyor, a prickly bristle or brush grasper, a wire retrieval basket, or the like.

[**0052**] The foregoing procedure and apparatus may be used for either a diagnostic or a therapeutic purpose. It is particularly advantageous for a diagnostic procedure because the resultant incision from the procedure will not substantially exceed in length the diameter of the cannula. On the other hand, a second preferred embodiment, illustrated in **FIGS. 11-16**, is particularly suited to a therapeutic procedure, wherein it is highly desired to ensure that the entire lesion of interest is removed in one step, without segmenting that lesion within the body. This approach emphasizes maximum safety, in that only a single procedure is necessary, assuming the tissue sample margins are clean, and the incision necessary to remove the intact tissue sample is of the minimum size necessary to remove the sample. With this procedure, there is also a somewhat reduced risk of cell migration from the specimen to the surrounding tissue, since as described below, the specimen is encapsulated as soon as it is isolated and then promptly removed. No segmentation of the specimen occurs within the patient's body.

[**0053**] Referring now to **FIGS. 11-14**, wherein like elements to those in the first embodiment are identified by like reference numerals, followed by the letter "b", there is shown the distal end or disposable wand portion **12***b* of an instrument **10***b*. The portion **12***b* includes a distal tip **14***b*, which may be constructed in a manner similar to that of tip **14** in **FIG. 1**, a shaft **18***b*, and a sleeve **30***b*. Disposed in a radially retracted orientation in a recess **48***b* of the shaft **18***b* are a plurality of encapsulation elements or bands **72**, one of which also comprises a single electrosurgical cutting element **20***b*. For the purposes of the invention it is unimportant which of the encapsulation elements **72** may be charged by means of RF energy to form an electrosurgical cutter, and in certain instances it may be advantageous to employ a plurality of cutting elements. Each of the encapsulation elements **72** and the cutting element **20***b* are attached at their distal ends to the distal end of the shaft **18***b*, at its connection with the distal tip **14***b* of the instrument **10***b*, which connection is preferably accomplished by means of a keyway **74**.

[**0054**] The proximal end of the instrument **10***b* may be substantially the same as that for the instrument **10**, illustrated in **FIGS. 4-7**, comprising a reusable driver portion having an actuator for axially moving the sheath **30***b* between proximal and distal positions, a linear actuator for axially moving the shaft **18***b*, an actuator for rotationally moving the shaft **18***b*, and an actuator for axially moving the proximal ends of the encapsulation elements **72** and cutting element **20***b*, in order to radially extend and retract each of the elements **72** and **20***b*, as illustrated in **FIGS. 14-16**.

[**0055**] In operation, as with the first embodiment of **FIG. 1**, when it is determined that either a diagnostic or therapeutic biopsy procedure is indicated, the distal disposable wand portion **12***b* of the instrument **10***b* will be moved axially to a position wherein the distal tip is adjacent to and distally of a target lesion, using the stereotactic rail **26** and associated imaging system. During this process step, wherein gross linear movement of the wand **12***b* is controlled by the rail system **26**, the electrosurgical cutting element (not shown) on the distal tip **14***b* is energized to pierce and cut through the patient's body tissue to permit distal advancement of the wand **12***b* to the region surrounding the lesion.

[**0056**] Once the distal tip **14***b* is generally in the desired position adjacent to the target lesion, using the stereotactic rail **26**, the second lever **38** is actuated to provide fine tuning of the axial position of the distal tip **14***b* relative to the lesion, by moving the shaft **18***b* axially to a desired position, and securing the lever **38** in an appropriate stop **50** to maintain the desired axial position. This fine axial adjustment of the axial movement of the shaft **18***b* is performed using appropriate imaging equipment. The objective of this process step is to ensure that the distal end of the cutting wire **20***b* is disposed distally of the distal peripheral edge of the lesion, while at the same time the proximal end of the cutting wire **20***b* is disposed proximally of the proximal peripheral edge of the lesion. This will ensure the ability to isolate the entire lesion during the cutting procedure, with sufficient margins to minimize the chance that any portion of the lesion inadvertently remains behind in the patient's body following removal thereof.

[**0057**] When the distal tip **14***b* is in the precise position desired by the practitioner, first lever **36**, which is normally disposed in a first detent **58** (**FIGS. 5 and 6**) in the first slot **42**, is actuated proximally until it rests in a second detent **60** (**FIG. 7**) in the first slot **42**. This action retracts the sheath **30***b* proximally a sufficient distance to completely uncover the cutting element **20***b* and associated encapsulation elements **72**. The third lever **40** may then be actuated distally along the third slot **46** to the distal-most stop **52**, thereby causing the rod **32**, and therefore the proximal ends of the cutting element **20***a* and encapsulation elements **72**, to move axially a distance equivalent to that traversed by the lever **40**. This, of course, results in the radial expansion of the cutting element **20***b* and encapsulation elements **72** to an arched or bowed configuration as shown in **FIG. 14**, wherein the cutting element **20***b* defines a peripheral boundary which lies radially beyond the peripheral boundary of the lesion, as in the case of the first embodiment shown in **FIG. 8**. Again, it should be noted that the cutting element and encapsulation elements need not be fully extended, especially if an ellipsoidal or toroidal cutting geometry is desired, in which case intermediate stop **61** is utilized.

[**0058**] Once the cutting element **20***b* and associated encapsulation elements **72** are radially expanded as

described supra, it is time to isolate the target lesion from surrounding tissue. Advantageously, a spherical or toroidal tissue sample having a radius of at least 15 mm may be defined and isolated by rotating the cutting element **20***b* about the axis of the shaft **18***b*. The encapsulation elements **72** will also be rotated during this process, but their function is not yet important. To complete the isolation step, the cutting element **20***b* is energized by the electrosurgical generator (not shown), after which the knob **34** is rotated, either manually or via a motorized drive mechanism, to rotate the shaft **18***b*, and thus the cutting element **20***b* through a 360 degree arc. This rotational cutting action functions to completely sever the tissue sample from the surrounding tissue, thereby cutting off all blood supply to the tissue sample (and thus from the lesion, which should be completely contained within the tissue sample).

[**0059**] After the isolation step is completed, the isolated tissue sample may be retrieved from the patient's body **56**. This retrieval step may be accomplished in a number of ways, but it is the objective in connection with the illustrated embodiment to encapsulate and remove the isolated tissue sample in one piece. Accordingly, as is illustrated in **FIGS. 15 and 16**, continued rotation of the shaft **18***b*, once the isolation step has been completed, preferably with the cutting element **20***b* de-energized, will twist and tighten the encapsulating elements **72** and the cutting element **20***b* about the tissue sample (not shown). As the shaft **18***b* is rotated, and the encapsulating elements **72** radially retracted and twisted, they will function to deform the tissue sample radially so that it is more compact and more securely retained within the spaced defined by the encapsulating elements **72**.

[**0060**] Once the tissue sample has been fully encapsulated, the tissue sample may be removed from the patient's body. Advantageously, since the tissue sample is larger in cross-section than the cross-section of the sheath **30***b*, the inventors have developed an inventive approach for removal thereof which results in minimum trauma and incision size for the patient while still permitting the removal of an intact specimen. To remove the specimen, the sheath **30***b* is retracted proximally, following which the cutting element **20***b* is again energized by the electrosurgical generator. The shaft **18***b*, with the tissue specimen encapsulated thereabout, is then proximally withdrawn by the practitioner, with the cutting element **20***b* functioning to cut through the tissue necessary to create a passage for exit of the sample. Once the unit, including the shaft and encapsulated tissue mass, is completely withdrawn from the body, the incision created by the cutting element **20***b* upon withdrawal from the body may be adhesively closed, with minimal required follow-up care and scarring.

[**0061**] Many alternative embodiments may be used to accomplish the method outlined supra, which essentially involves isolating the tissue mass from surrounding tissue, encapsulating the tissue mass in place about a shaft, then removing the encapsulated tissue mass and shaft from the body by energizing an RF electrosurgical cutter to cut its way out, without the need for a cannula or pre-existing incision. For example, a plurality of cutting elements could be employed, or a separate cutting element could be disposed on the shaft. An important aspect of the invention, of course, is a relatively high likelihood of acquiring the entire lesion of interest in a single therapeutic procedure, without the need for follow-up surgery.

[**0062**] While this invention has been described with respect to various specific examples and embodiments, it is to be understood that the invention is not limited thereto and that it can be variously practiced within the scope of the following claims.

1. A biopsy instrument for retrieving body tissue, having a longitudinal axis and comprising:

a distal end adapted for entry into a patient's body; and

a cutting element disposed on said instrument, said cutting element being actuatable between a radially retracted position and a radially extended position, relative to said axis, and being movable in said radially extended position to isolate a desired tissue specimen from surrounding tissue by defining a peripheral margin about said tissue specimen.

2-39. (canceled)

40. A method of removing a specimen of breast tissue that is cut from surrounding breast tissue, comprising:

a. providing a device that includes a shaft and a tissue collection element which is coupled to the shaft, which has at least one thin flexible component and which is movable between a retracted position and an expanded position;

b. introducing the device into the breast tissue with the tissue collection element in the retracted position;

c. expanding the tissue collection element to the expanded position after the introducing step;

d. moving the tissue collection element to capture the cut specimen;

e. encapsulating the cut specimen with the at least one thin flexible component while maintaining the cut specimen intact and isolating the encapsulated specimen from contact with the surrounding breast tissue and returning the tissue collection element to the retracted position while maintaining the cut specimen intact and encapsulated; and

f. removing the device from the breast tissue while the specimen remains encapsulated within the at least one thin flexible component of the retracted tissue collection element.

41. The method of claim 40, wherein the encapsulating step is carried out with the at least one thin flexible component forms a container.

42. The method of claim 41, wherein the container is configured to selectively open to capture the cut specimen and close to encapsulate the cut specimen as the tissue collection element bows away from and back toward the shaft, respectively.

43. The method of claim 40, wherein the moving step includes rotating the shaft.

44. The method of claim 40, wherein the moving step is carried out with the tissue collection element moving along an arc.

45. The method of claim 40, wherein the encapsulating step is carried out with the tissue collection element expanding to a size at least equal to the size of the cut specimen.

46. The method of claim 40, wherein the shaft defines a longitudinal axis and wherein:

g. the introducing step includes positioning the shaft along side of the cut specimen; and

h. the moving step includes rotating the shaft about the longitudinal axis while moving the tissue collection element from the retracted position to the expanded and back to the retracted position to capture and encapsulate the cut specimen as the shaft rotates.

* * * * *