United States Patent [19]

Schubert

[11] **3,903,489**

[45] **Sept. 2, 1975**

[54] **PLASMA WAVEGUIDE SWITCH PERMITTING TRIGGERING WITH BOTH CATHODE AND WAVEGUIDE GROUNDED**

[75] Inventor: **David C. Schubert,** Pasadena, Md.

[73] Assignee: **The United States of America as represented by the Secretary of the Air Force,** Washington, D.C.

[22] Filed: **Nov. 14, 1973**

[21] Appl. No.: **415,894**

[52] **U.S. Cl.** ..... **333/98 S;** 313/205; 315/39 R

[51] **Int. Cl.**[2] **333 13;** H01P 1/14

[58] **Field of Search** ..... 333/98 S, 99 MP, 13; 313/205; 315/39 R

[56] **References Cited**

UNITED STATES PATENTS

3,480,828 11/1969 Goldie 313/13

FOREIGN PATENTS OR APPLICATIONS

65,567 2/1956 France 333/13

OTHER PUBLICATIONS

Goldie, H. "S-Band Thyratron Waveguide Switch as a pretrigged Megawatt Duplexer," Microwave Jr. 8-1968, pp. 41-47.

Primary Examiner—Alfred E. Smith
Assistant Examiner—Wm. H. Punter
Attorney, Agent, or Firm—George Fine; Joseph E. Rusz

[57] **ABSTRACT**

A plasma waveguide switch is provided which permits triggering with both the cathode and waveguide grounded. An anode and a slotted grid are made to act as part of the walls of the waveguide for RF purposes while being isolated from the waveguide with respect to DC and video signals.

2 Claims, 6 Drawing Figures

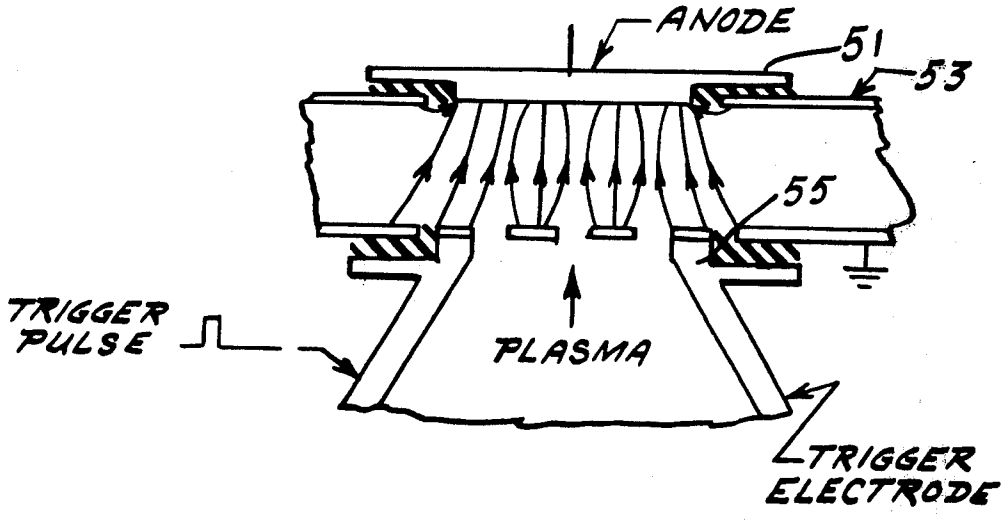

FIG. 1
PRIOR ART

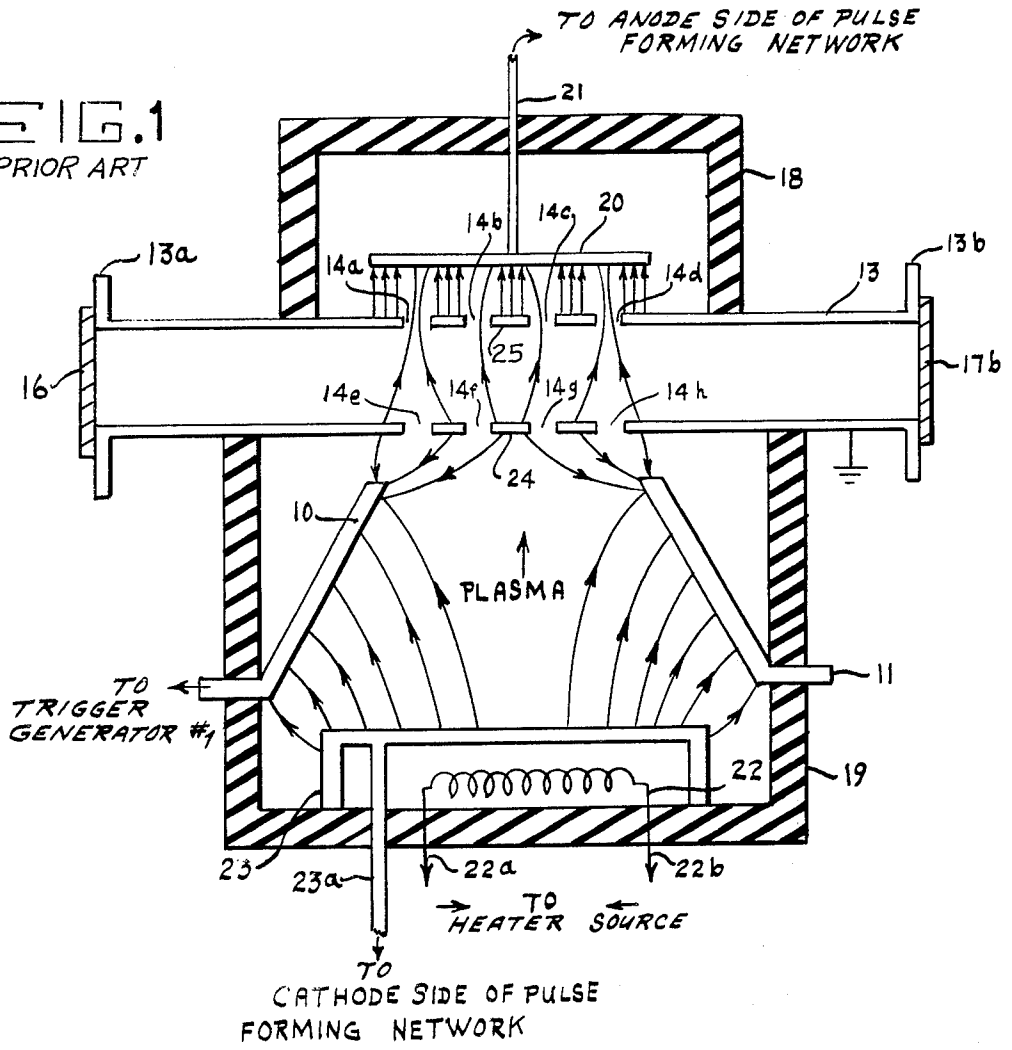

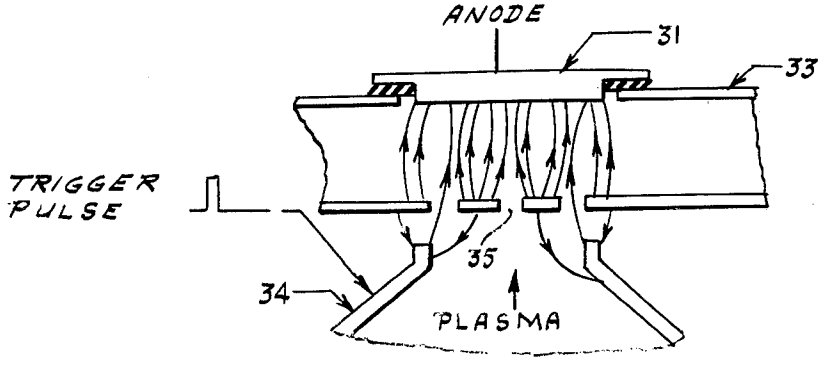

FIG. 2

FIG.3

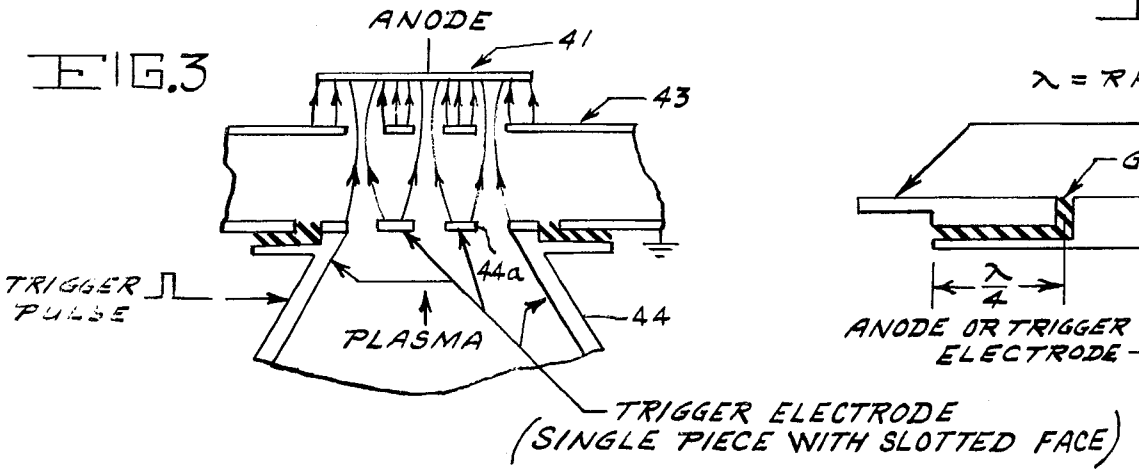

FIG.5

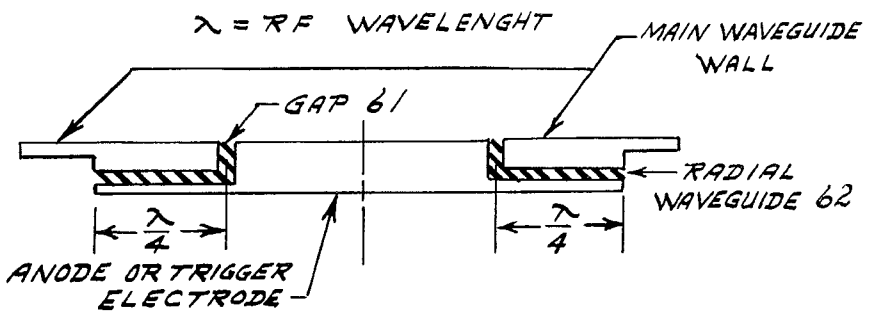

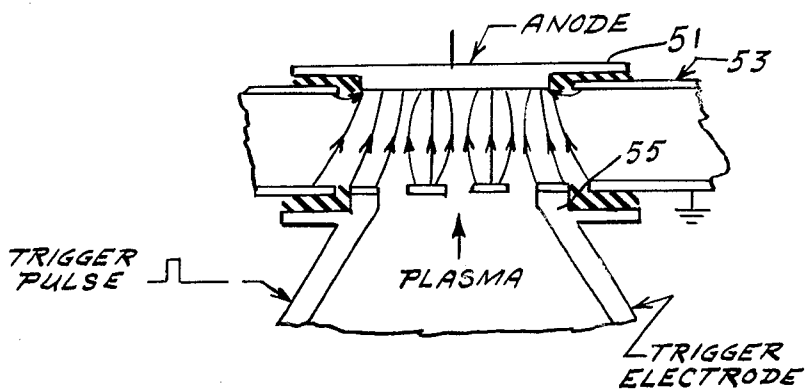

FIG.4

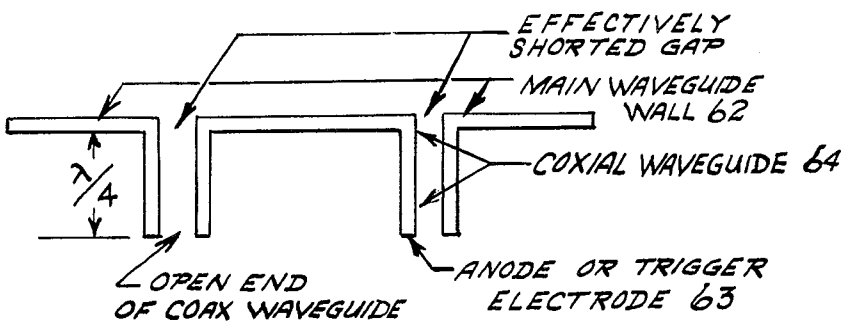

FIG.6

PLASMA WAVEGUIDE SWITCH PERMITTING TRIGGERING WITH BOTH CATHODE AND WAVEGUIDE GROUNDED

CROSS REFERENCE TO RELATED APPLICATION

This invention is related to the U.S. patent application filed at an even date herewith entitled, "AN INSULATING CONE PLASMA ENHANCEMENT CONFIGURATION FOR A PLASMA WAVEGUIDE SWITCH," by David C. Schubert, now U.S. Pat. No. 3,845,427, and may be utilized in the aforesaid U.S. patent application in the modification thereof.

BACKGROUND OF THE INVENTION

Plasma waveguide switches (PWS) for broadband control of RF energy transmission have undergone many years of development. They consist of a section of waveguide with pressure windows and a suitable atmosphere for supporting a glow discharge. Slots or holes in the walls of the guide permit the establishment of an externally initiated discharge with high currents passing from a cathode on one side of the guide to an anode on the other side. A high density plasma may thus be established inside the waveguide by suitable excitation of the external anode and cathode. Radio frequency waves directed into one end of the waveguide section are reflected back to their source when plasma of sufficient density fills the guide, but they pass through the guide virtually unimpeded when the plasma is absent.

Performance specifications for this type of tube consist of the RF isolation provided, the RF insertion loss in the absence of a discharge, the speed of charge buildup and decay when the discharge is initiated and concluded, and the external circuit requirements. As the designed operating frequency for the PWS increases, it becomes necessary to inject plasma at higher electron density into a smaller section of waveguide. Injection of the required charge density into the waveguide through a charge focusing configuration and entrance slot configuration which does not produce excessive insertion loss when the plasma is absent becomes progressively more difficult as the RF frequency is raised. In practice the measures designed to optimize high frequency isolation and insertion loss produce a tube which requires a high anode voltage and high trigger energy to initiate the discharge. The high anode voltage increases the tendency for a discharge to start spontaneously between the anode and the grid. Prevention of this condition, known as "kickout," requires precise control of the gas composition and pressure. In addition, the need to avoid insertion losses at insulated flanges dictates that the waveguide section must be operated at DC and video ground potential. If the cathode is also operated at ground potential, there is no potential drop available to drive into the waveguide the plasma generated near the cathode. For this reason, it is has been impossible in conventional configurations to pulse the PWS with both cathode and waveguide grounded. The circuit which does pulse successfully the PWS when the waveguide is grounded has the disadvantage that the pulse generator is loaded with the inter-turn capacitance of the filament transformer.

Thus any change of configuration which made the PWS easy to fire with a low anode voltage would be desirable, and one which did this with the waveguide and cathode both grounded is the subject matter of this invention. This is accomplished by increasing the penetration of the anode field throgh the perforated waveguide section without introducing unacceptable insertion losses when the charged plasma is absent.

SUMMARY OF THE INVENTION

A plasma waveguide switch is provided which permits triggering with both the cathode and waveguide grounded. An anode and a slotted grid are made to act as part of the walls of a plasma waveguide switch waveguide for RF purposes while being isolated from the waveguide with respect to DC and video signals. This arrangement greatly eases the problem of pulsing the plasma waveguide switch even to the heretofore impossible extent of pulsing the switch with cathode and waveguide grounded. The isolation of plasma generated in the cathode-grid region from the anode can be reduced by an order of magnitude if either the anode or the control grid is built into the broad wall of the waveguide. It can be eliminated altogether if both the anode and the control grid are built into opposite broad walls of the waveguide. The order of magnitude increases of flux directed from the control grid to the anode occur when one or both of these electrodes are built into the broad wall of the waveguide. It is noted that in the conventional grounded waveguide arrangement, two grounded screens (the opposite broad walls, pierced by plasma slots) in cascade capture practically all of the flux lines from the positive anode. Where the anode replaces part of one waveguide there is eliminated the screening effect of one set of slots and webs. An increased, but still small, portion of the flux lines penetrate the waveguide and ends on the control grid. Where the conventional anode is used, but the control grid is built into the waveguide wall, a few anode flux lines reach the control grid thus ensuring that any plasma drawn to the face of the control grid would be exposed to the breakdown producing anode field. With both anode and control grid built into the waveguide walls, virtually the entire field from the anode is available to accelerate electrons which reach the vicinity of the control grid. Thus one or two free electrons near the control grid will normally be all that is needed to initiate the discharge, and starting anode potentials much beyond 100 V are not needed.

DESCRIPTION OF THE DRAWINGS

FIG. 1 shows the prior art conventional plasma waveguide switch;

FIG. 2 shows a plasma waveguide switch with the anodes as part of the waveguide wall;

FIG. 3 shows a plasma waveguide switch with a slotted cone face as part of the waveguide wall;

FIG. 4 shows a plasma waveguide switch with both a trigger electrode and the anode built into the waveguide walls;

FIG. 5 shows the geometry for providing an RF short to the waveguide wall for anode or trigger electrode while maintaining DC isolation; and

FIG. 6 shows an alternate geometry for DC isolation of the anode or trigger electrode with an RF short circuit.

DETAILED DESCRIPTION OF THE PREFERRED EMBODIMENT

Referring to FIG. 1, there is shown a conventional prior art grounded plasma waveguide switch. Curved

lines with arrows show principal electric fields at trigger time. Insulated components are shown with cross hatching.

There is illustrated grounded waveguide **13** having one set of slots **14***a*–**14***d* on one broadwall wall and a second set of slots **14***e*–**14***h* on an opposite broadwall wall thus providing a pierced waveguide section. Thus there is formed a thyratron type grid. Waveguide **13** includes flanges **13***a* and **13***b*. Waveguide **13** has disposed at one end at flange **13***a* pressure window **16** to permit the input of an RF signal and disposed at the other end at flange **13***b* is pressure window **17** for the outputting of the RF signal. Pressure windows **16** and **17** also serve as airtight seals for waveguide **13.**

Housings **18** and **19** are attached to and integrated with waveguide **13** and also are airtight sealed thereto. They serve as insulating envelopes. In housing **18,** there is positioned anode **20** which is connected to anode lead **21.** Anode lead **21** is air-tight sealed with housing **18.** Housing **19** has disposed therein heater **22** having airtight sealed leads **22***a* and **22***b*. Also included in housing **19** is cathode **23** having airtight sealed lead **23***a*. Focusing conducting cone **10** is also positioned in housing **19** and connected thereto is electrode **11** which is airtight sealed to housing **19.** Airtight plasma waveguide switch is comprised of waveguide **13,** housings **18** and **19** and the associated elements therein.

The airtight plasma waveguide switch permits a low pressure controlled atmosphere operation therein. The aforesaid atmosphere is suitable for supporting a glow discharge. Slots or holes **14***a*–**14***h* in the walls of waveguide **13** permit establishment of an externally initiated discharge with high currents passing from cathode **23** on one side of waveguide **13** to anode **20** on the other side. A high density plasma is thus established inside waveguide **13** by suitable excitation of anode **20** and cathode **23.** Cone **10** is employed to compress the plasma to obtain the required electron density. Radio frequency waves directed into one end of waveguide **13** by way of pressure window **16** are reflected back to their source when plasma of sufficient density fills waveguide **13,** but they pass through waveguide **13** virtually unimpeded when plasma is absent.

It is noted that two grounded screens **24** and **25** are in effect provided by the opposite broad walls of waveguide **13** being pierced by plasma slots **14***a*–**14***h* in cascade capture practically all of the flux lines from positive anode **20.** The electric lines of force are shown as lines with arrows. Most lines from anode **20** fail to penetrate the two sets of slots **14***a*–**14***d* and **14***e*–**14***h*. Arrows are in the direction of acceleration during triggering. c Electrons are decelerated before arrival in waveguide **13** and only weakly accelerated through the waveguide.

Now referring to FIG. **2,** there is shown only a portion of the plasma waveguide switch of FIG. **1** with a modification wherein anode **31** replaces part of the waveguide wall, thus eliminating the screening effect of one set of slots. An increased but still small portion of the flux lines penetrates the waveguide **33** and ends on the control grid. Placing anode **31** as part of the waveguide wall gives enhanced acccelerating field inside the waveguide and reduces deceleration of electrons between the opening of focusing, cone **34** and entrance slots **35.** Electric lines of force are shown with arrows.

FIG. **3** shows a portion of the plasma waveguide switch with conventional anode **41,** but control grid is built into the waveguide wall. Again, a few anode flux lines can reach the control grid, thus ensuring that any plasma drawn to the face of the control grid would be exposed to the breakdown producing anode field. The face of focusing cone **44** is made part of the waveguide wall which brings electrons to the brink of weak anodes accelerating field inside waveguide **43** as indicated by the line of force. The lines of force are those lines with arrows. Cone **44** has slotted face **44***a* which becomes part of the waveguide wall and serves as the control grid.

Now referring in detail to FIG. **4,** there is shown a portion of the waveguide switch which is a modification of FIG. **1** and is the preferred embodiment of this invention in which both anode **51** and control grid **55** are built into the waveguide walls. The anode is as shown in FIG. **2** and the control grid is as shown in FIG. **3.** Virtually the entire field from anode **51** is available to accelerate electrons which reach the vicinity of control grid **55.** Thus one or two free elect ons near control grid **55** will normally be all that is needed to initiate a discharge, and starting potentials much beyond 100 V are not needed. The reduced anode potential practically eliminates the choice of a kickout discharge between anode **51** and waveguide **53.**

It is noted that with both anode **51** and the face of focusing cone **54** built into the waveguide wall, electrons are delivered to the full anode field directly from the cone mouth without deceleration. The combination of electron accelerations permits triggering with very low anode voltages. The electric lines of force are shown as lines with arrows.

To provide DC and video isolation between anode **51** and/or control grid **55** and the remainder of waveguide section **53** without permitting RF leakage or an effective discontinuity in the waveguide may be accomplished by letting the face of the grid or anode be round and arranging the insulating gap as a radial or coaxial waveguide one quarter wavelength long at the RF micfrequency with open circuit termination. Two arrangements are shown in FIGS. **5** and **6** for a single electrode. The open circuit at the end of the insulating guide appears to the RF as a short circuit binding the electrodes to adjacent section of waveguide. The attainment of a good short circuit is not critical, since the electric field, and hence the axial current, has a node at the main waveguide wall. Either arrangement of FIG. **5** or that of FIG. **6** may be used for the anode and independently either arrangement may be used for the trigger grid.

FIG. **5** specifically shows an arrangement for providing an RF short to the waveguide wall for the anode or trigger electrode while maintaining DC isolation. The space between parallel surfaces of the waveguide wall and electrode skirt act as a radial waveguide **62** with open circuit at the end, thus reflecting an effective short circuit at gap **61.** The trigger electrode is a figure of revolution.

FIG. **6** is an alternate arrangement for DC isolation of the anode or trigger electrode with an RF short circuit. An annular space between electrode **63** and coaxial waveguide extension **64** acts as separation in a coaxial transmission line open circuited at end away from the main waveguide.

What is claimed is:

1. A plasma waveguide switch permitting triggering with both cathode and waveguide grounded being comprised of a section of waveguide having first and second

waveguide walls, said first waveguide wall being opposite to said second waveguide wall, said section of waveguide having only first and second ends, first and second pressure windows airtight sealed to said first and second ends for entrance and exit of RF energy, respectively, an anode positioned in the central region of said first waveguide wall being part thereof and DC isolated therefrom, a first insulating envelope airtight sealed to said first waveguide wall and fully encompassing said anode, a conducting cone having an apex and base with a slotted face at said apex thereof, said slotted face positioned in the central portion of said second waveguide wall being part thereof and simultaneously DC isolated therefrom, said slotted face operating as a control grid, a second insulating envelope airtight sealed to said second of said waveguide walls and fully encompassing said control grid, a cathode positioned in said second insulating envelope with said base of said cone adjacent thereto, said section of waveguide, said first and second envelopes being airtight sealed to each other forming a housing for said plasma waveguide switch, and a low pressure controlled atmosphere in said housing for supporting a glow discharge therein.

2. A plasma waveguide switch as described in claim **1** further including a triggering electrode connected to said cone.

* * * * *