(12) INTERNATIONAL APPLICATION PUBLISHED UNDER THE PATENT COOPERATION TREATY (PCT)

(19) World Intellectual Property Organization
International Bureau

(43) International Publication Date
02 November 2017 (02.11.2017)

WIPO | PCT

(10) International Publication Number
WO 2017/186798 A1

(51) International Patent Classification:
F16C 9/04 (2006.01) *F16C 33/04* (2006.01)
F16C 7/02 (2006.01) *F16C 33/10* (2006.01)

(21) International Application Number:
PCT/EP2017/059939

(22) International Filing Date:
26 April 2017 (26.04.2017)

(25) Filing Language: English

(26) Publication Language: English

(30) Priority Data:
BR 10 2016 009560 3
28 April 2016 (28.04.2016) BR

(71) Applicants: **MAHLE METAL LEVE S/A** [BR/BR]; Rodovia Anhanguera, sentido interior, - capital, Km 49,7, 13210-877 Jundiaí (BR). **MAHLE INTERNATIONAL GMBH** [DE/DE]; Pragstraße 26-46, 70376 Stuttgart (DE).

(72) Inventors: **ZOTTIN, Walter**; Rua Parque Caparao, 299, Condominio Residencial Recanto dos Paturis, 13280-000 Vinhedo, SP (BR). **FERREYRA, Sergio Adrian**; Rua Cantiga do Desencontro, 122, Parque Residencial da Lapa, 05065-070 Sao Paulo (BR).

(74) Agent: **BRP RENAUD UND PARTNER MBB**; Königstraße 28, 70173 Stuttgart (DE).

(81) Designated States *(unless otherwise indicated, for every kind of national protection available)*: AE, AG, AL, AM, AO, AT, AU, AZ, BA, BB, BG, BH, BN, BR, BW, BY, BZ, CA, CH, CL, CN, CO, CR, CU, CZ, DE, DJ, DK, DM, DO, DZ, EC, EE, EG, ES, FI, GB, GD, GE, GH, GM, GT, HN, HR, HU, ID, IL, IN, IR, IS, JP, KE, KG, KH, KN, KP, KR, KW, KZ, LA, LC, LK, LR, LS, LU, LY, MA, MD, ME, MG, MK, MN, MW, MX, MY, MZ, NA, NG, NI, NO, NZ, OM, PA, PE, PG, PH, PL, PT, QA, RO, RS, RU, RW, SA, SC, SD, SE, SG, SK, SL, SM, ST, SV, SY, TH, TJ, TM, TN, TR, TT, TZ, UA, UG, US, UZ, VC, VN, ZA, ZM, ZW.

(84) Designated States *(unless otherwise indicated, for every kind of regional protection available)*: ARIPO (BW, GH, GM, KE, LR, LS, MW, MZ, NA, RW, SD, SL, ST, SZ, TZ, UG, ZM, ZW), Eurasian (AM, AZ, BY, KG, KZ, RU, TJ, TM), European (AL, AT, BE, BG, CH, CY, CZ, DE, DK, EE, ES, FI, FR, GB, GR, HR, HU, IE, IS, IT, LT, LU, LV, MC, MK, MT, NL, NO, PL, PT, RO, RS, SE, SI, SK, SM, TR), OAPI (BF, BJ, CF, CG, CI, CM, GA, GN, GQ, GW, KM, ML, MR, NE, SN, TD, TG).

Published:
— *with international search report (Art. 21(3))*

(54) Title: SHELL BEARING FOR INTERNAL COMBUSTION ENGINES

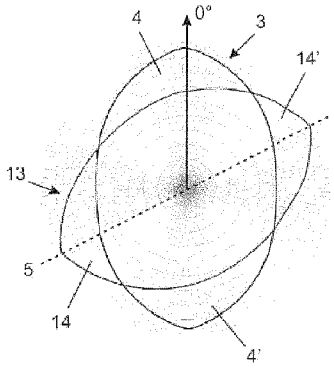

Fig. 3

(57) Abstract: The present invention relates to a shell bearing (1) for internal combustion engines particularly applicable in a connecting rod having an inclined cap (2), wherein the shell bearing (1) is provided with two semicircular segments which, when fitted in the connecting rod (2), define an eccentricity profile (3) of the shell bearing (1), wherein the major dimension of this eccentricity profile (3) defines regions of play (4, 4') aligned with a position of zero degrees (0° ± 5°), having the objective of minimizing peaks of oil film pressure, consequently minimizing the loss of power of the engine through the reduction of the friction between a crankshaft and an internal surface of the shell bearing (1).

WO 2017/186798 A1

Descriptive Memorandum of Patent of Invention for **'SHELL BEARING FOR INTERNAL COMBUSTION ENGINES'.**

[0001] The present invention relates to a shell bearing for internal combustion engines particularly applicable in a connecting rod having an inclined split line, comprising an eccentricity profile defining regions of play aligned with a position of zero degrees (vertical), capable of minimizing peaks of oil film pressure, consequently minimizing the loss of power of the engine due to the friction.

Description of the state of the art

[0002] Internal combustion engines comprise, essentially, an engine block, comprising one or more cylinders and the cranked shaft assembly or crankshaft assembly, wherewith are associated one or more heads, wherein, in turn, the cranked shaft assembly is composed of pistons, connecting rods and the crankshaft.

[0003] The connecting rod is the part interconnecting a piston to the crankshaft, converting the alternating linear motion of the piston within the interior of the cylinder into a continuous angular movement of the crankshaft. The connecting rod is provided, basically, with a large hole or eye, referred to as the connecting rod head, wherewith is associated a crankshaft, a stem or body, and a small hole or eye, referred to as the connecting rod foot, being affixed to a piston by means of a gudgeon or pin.

[0004] During the functioning of the engine the piston(s) move linearly and reciprocally. The respective connecting rod moves connectedly with each piston, and the head thereof, associated with the

crankshaft, describes a circular movement resulting in the angular motion of the crankshaft.

[0005] In order to render possible the operation of the engine it is necessary that the contact between the crankshaft and the other components of the engine be realized by means of bearings, more commonly known as shell bearings or bushings. Whatever the specific configuration thereof may be, they are generally known as sliding bearings.

[0006] In an internal combustion engine the shell bearings may be utilized (i) as crankshaft bearings in relation to the engine block, (ii) as connecting rod bearings in relation to the crankshaft, and (iii) as camshaft bearings, inter alia other less common applications.

[0007] Specifically, the bearings developed for utilization upon the crankshaft are referred to as shell bearings. In general, the shell bearings comprise two segments of a ferrous metal, principally of steel, each segment forming a semicircular or 'C' shaped half (having the objective of facilitating the fitting of a connecting rod), the two segments being associated in annular format, similar to a sleeve.

[0008] The external surface of a shell bearing presents characteristics of hardness capable of permitting a firm contact with the housing thereof, without deformations, ensuring the correct support thereof and providing the correct dissipation of heat generated through attrition (friction), in this manner preventing overheating of the assembly.

[0009] Conversely, the internal surface of the shell bearings comprises a coating which may be comprised by several metal alloys such as, for example and inter

alia, alloys based upon copper or upon aluminum, always seeking resistance to abrasion and to wear, in addition to good conformability, providing a long working life, including under severe conditions of operation of the engine.

[0010] Whereas a shell bearing may of itself realize the function of reduction of friction between the crankshaft and the connecting rod associated therewith, the performance thereof is greatly improved through the addition of a lubricant between the moving part (crankshaft) and the internal surface of the shell bearing. For this reason one of the principal objectives of the design of a shell bearing is to establish and maintain a film of oil between these surfaces, generally under variable and high impact loads.

[0011] In normal operation the crankshaft and the internal surface of the shell bearing are maintained separated from one another by a film of oil formed therebetween in a condition of hydrodynamic lubrication. In this respect, the maximization of this film of oil predominates in the working life of the shell bearing and of the other components in order to prevent the contact between the crankshaft and the bearing. Consequently what is sought is to design shell bearings such as to provide the greatest possible thickness of the film of oil compatible with the characteristics of the system of lubrication of the engine.

[0012] However, the functioning of the engine imposes upon the assemblies thereof high loads, accompanied by peaks of oil pressure and temperature, causing the mechanical fatigue of the material and reducing the dynamic viscosity of the oil, producing a thinner film of oil and reducing the condition of

hydrodynamic lubrication, resulting in the occurrence of a fortuitous contact between the crankshaft and the internal surface of the shell bearing, leading to possible failures through the friction generated.

[0013] The variation of this contact occurs, principally, by virtue of the loads exerted by the power cell (liner, piston, rings, connecting rod, sleeves and pin) upon the crankshaft, the values whereof attain the peak thereof on starting the engine or on the commencement of operation. As the peak load occurs moments after the reversal of movement, that is to say when the piston has already commenced its return movement, the maximum value of pressure upon the shell bearings occurs in a decentralized manner.

[0014] For this reason the profile of the shell bearings, formed on the joining of two segments fitted in a connecting rod, is not rigorously cylindrical, being manufactured with slight eccentricity.

[0015] This eccentricity profile is capable of originating regions of appropriate play having the objective of assisting in the rapid formation of the film of lubricating oil, in this manner preventing the metal-metal contact on commencing the movement of rotation of the crankshaft. Moreover, such profile serves to compensate for the possible deformation of the housing, a factor which would affect the regions of play and the dissipation of heat of the components.

[0016] In order that the shell bearing may achieve the optimum performance thereof, the eccentricity profile thereof must render possible an improved distribution of pressure such that greater play be obtained in the regions of load upon the shell bearing.

[0017] Traditionally, connecting rods having an inclined cap are utilized in many applications of petrol or diesel combustion engines, medium and heavy engines, and 'V' engines. These connecting rods having an inclined cap comprise regions of load differing from the conventional connecting rods such that the shell bearings applied must, in addition, comprise a differentiated eccentricity profile in relation to the shell bearings usually utilized in conventional connecting rods.

[0018] In general, the shell bearings applicable in connecting rods having an inclined cap comprise an eccentricity profile such that the major dimension of the profile defines regions of play aligned with a split line of the shell bearing. This split line forms the division of the two semicircular segments of the shell bearing and is inclined in conformity with the inclination of the cap of the connecting rod.

[0019] This solution found in the state of the art, although functional, does not define an optimum eccentricity profile in that it does not achieve the best possible performance of the shell bearing.

[0020] In this manner the obtainment is rendered necessary of a shell bearing for internal combustion engines particularly applicable in a connecting rod having an inclined cap, it defining an eccentricity profile conferring an improved performance upon the shell bearing such as to minimize peaks of pressure of the film of oil, consequently minimizing the loss of power of the engine through the reduction of the friction between a crankshaft and the internal surface of the shell bearing.

Objects of the invention

[0021] The object of the present invention is to provide a shell bearing for internal combustion engines particularly applicable in a connecting rod having an inclined cap, the shell bearing being provided with two semicircular segments which, when fitted in the connecting rod, define an eccentricity profile such that the major dimension of this eccentricity profile defines regions of play aligned with a position displaced in relation to a split line of the shell bearing, particularly a position of zero degrees 0° ± 5°.

[0022] And, additionally, an object of the present invention is to provide a shell bearing ensuring the minimization of the peaks of oil film pressure causing the mechanical fatigue of the material and reducing the dynamic viscosity of the oil.

[0023] Furthermore, an object of the present invention is to provide a shell bearing capable of minimizing the loss of power of the engine through the reduction of the friction between a crankshaft and the internal surface of the shell bearing.

Brief description of the invention

[0024] The objects of the present invention are achieved by a shell bearing for internal combustion engines, particularly applicable in a connecting rod having an inclined cap, wherein the shell bearing is provided with two semicircular segments which, when fitted in the connecting rod having an inclined cap, define an eccentricity profile of the shell bearing wherein the major dimension of this eccentricity profile defines regions of play aligned with a position of zero degrees (0° ± 5°).

[0025] The objects of the present invention are, additionally, achieved by a shell bearing wherein the position of zero degrees (0° ± 5°) of alignment of the regions of play is equivalent to the linear direction of motion of the connecting rod having an inclined cap, when associated with a piston.

[0026] Furthermore, the objects of the present invention are achieved by a shell bearing supporting working pressures of between 100 MPa and 250 MPa.

[0027] Moreover, the objects of the present invention are achieved by an internal combustion engine comprising at least one shell bearing as aforedescribed.

Brief description of the drawings

[0028] The present invention shall, hereinbelow, be described in greater detail on the basis of an example of embodiment shown in the drawings. The figures show:

[0029] Figure 1: perspective view of a segment of shell bearing;

[0030] Figure 2: representation of a shell bearing fitted in a connecting rod having an inclined cap;

[0031] Figure 3: representation of two eccentricity profiles of a shell bearing of the state of the art and of the shell bearing of the present invention;

[0032] Figure 4: graphical representation of the variation of oil film pressures in maximum torque condition for the state of the art, for an intermediate condition, and for the present invention;

[0033] Figure 5: graphical representation of the variation of oil film pressures in maximum power condition for the state of the art, for an intermediate condition, and for the present invention;

[0034] Figure 6: graphical representation of the variation in loss of power through friction (by connecting rod) in maximum torque condition for the state of the art, for an intermediate condition and for the present invention.

Detailed description of the drawings

[0035] The present invention relates to a shell bearing 1 for internal combustion engines particularly applicable in a connecting rod having an inclined cap 2, the shell bearing 1 being provided with two semicircular segments which, when fitted in the connecting rod 2, define an eccentricity profile 3 of the shell bearing 1, wherein the major dimension of this eccentricity profile 3 defines regions of play 4, 4' aligned with a position of zero degrees (0°), having the objective of minimizing oil film peaks of pressure, consequently minimizing the loss of power of the engine through the reduction of the friction between a crankshaft and the internal surface of the shell bearing 1.

[0036] As aforementioned in the state of the art, the shell bearings 1 comprise sliding bearings, the function whereof consists in reducing the friction between the said crankshaft and a connecting rod associated therewith.

[0037] The connecting rod is the part interconnecting a piston to the crankshaft, converting the alternating rectilinear movement of the piston within the interior of the cylinder into a continuous

angular movement of the crankshaft. During the functioning of the engine the piston(s) move linearly and reciprocally. Connectedly with each piston, the respective connecting rod moves and the head thereof, associated with the crankshaft, describes a circular movement, resulting in the angular motion of the crankshaft. Specifically, the bearings developed for utilization upon the crankshaft are referred to as shell bearings.

[0038] In figure 1 a semicircular segment, or one half, of a shell bearing 1 for use in internal combustion engines may be observed. In general, the shell bearings 1 comprise two segments of a ferrous metal, principally of steel, each segment forming a semicircular or 'C' shaped half (having the objective of facilitating the fitting of a connecting rod), the two segments being associated in an annular manner, similar to a sleeve.

[0039] Whereas the shell bearings 1 may of themselves realize the function of reduction of friction between the crankshaft and the connecting rod associated therewith, the performance thereof is greatly improved through the addition of a lubricant between the moving part (crankshaft) and an internal surface of the shell bearing 1. For this reason, one of the principal objectives of the design of a shell bearing is to establish and maintain a film of oil between these surfaces, generally under variable and high impact loads.

[0040] In normal operation the crankshaft and the internal surface of the shell bearing 1 are maintained separated from one another by a film of oil formed therebetween in a condition of hydrodynamic lubrication. In this manner, the maximization of this film of oil predominates in the working life of the

shell bearing and of the other components such as to prevent the contact between the crankshaft and the shell bearing.

[0041] However, the functioning of the engine imposes upon the assemblies thereof high loads, having peaks of oil pressure and temperature, causing the mechanical fatigue of the material and reducing the dynamic viscosity of the oil, producing a thinner film of oil and reducing the condition of hydrodynamic lubrication, resulting in the occurrence of a fortuitous contact between the crankshaft and the internal surface of the shell bearing, leading to possible failures through the friction generated.

[0042] Consequently, the intent is to design shell bearings such as to provide the greatest possible thickness of the film of oil compatible with the characteristics of the system of lubrication of the engine.

[0043] For this reason the profile of the shell bearings formed upon the joining of two segments fitted in a connecting rod is not rigorously cylindrical, being manufactured having slight eccentricity.

[0044] This eccentricity profile 3 is capable of originating appropriate regions of play 4, 4', having the objective of assisting in the rapid formation of the film of lubricating oil, in this manner preventing the metal-metal contact on commencing the movement of rotation of the crankshaft. Moreover, such profile 3 serves to compensate for the possible deformation of the housing, a factor which would affect the regions of play and the dissipation of heat of the components.

[0045] In order that the shell bearing 1 may achieve the optimum performance thereof, the eccentricity

profile 3 thereof must render the possibility of an improved distribution of pressure such that greater play be obtained in the regions of load upon the shell bearing.

[0046] In this manner, the present invention presents a shell bearing 1 for internal combustion engines particularly applicable in a connecting rod having an inclined cap 2, defining an eccentricity profile 3 comprising regions of play 4, 4' aligned with a position displaced in relation to a split line of the shell bearing 1, particularly a position of zero degrees 0°.

[0047] In conformity with that seen hereinbefore, the semicircular segments of a shell bearing 1, when fitted in a connecting rod 2, form an eccentricity profile 3 such that the major dimension, that is to say the regions most distant of this profile 3, define regions of play 4, 4' between a crankshaft and the internal surface of the shell bearing 1.

[0048] It is emphasized that the connecting rods having an inclined cap 2 comprise loaded regions differing from the conventional connecting rods such that the shell bearings applied must, additionally, comprise a differentiated eccentricity profile 3, having different regions of play 4, 4' in relation to the shell bearings usually utilized in conventional connecting rods.

[0049] Traditionally, the connecting rods having an inclined cap are utilized in many applications of petrol or diesel combustion engines, medium and heavy engines, and 'V' engines.

[0050] The shell bearings 1 applicable in connecting rods having an inclined cap 2 comprise an eccentricity

profile 13 such that the major dimension of the profile 13 defines regions of play 14, 14' aligned with a split line 5 of the shell bearing 1. This split line 5 forms the division of the two semicircular segments of the shell bearing 1 and is inclined in conformity with the inclination of the cap of the connecting rod, as seen in figure 3.

[0051] This solution found in the state of the art, although functional, does not define an optimum eccentricity profile in that it does not achieve the best possible performance of the shell bearing 1.

[0052] Consequently, in figure 3 it may be observed that the shell bearing 1 of the present invention is provided with an eccentricity profile 3 differing from that comprised by the state of the art in that it defines regions of play 4, 4' aligned with the positional zero degrees 0° ± 5°.

[0053] This position of zero degrees 0° ± 5° of alignment of the regions of play 4, 4' of the shell bearing 1 is equivalent to the linear direction of movement of the connecting rod having an inclined cap 2 when associated with a piston. The piston, when in operation, describes a linear movement, of ascent and descent, along the axis of 0°. Consequently, the regions of play 4, 4' of the shell bearing 1 of the present invention are aligned with this position of zero degrees 0° ± 5°, defined on the basis of the linear movement of the connecting rod 2 associated with the piston.

[0054] Consequently, in figure 3 there may be clearly observed the different eccentricity profiles 3, 13, with the regions of play 4, 4' of the present invention displaced in relation to the regions of play 14, 14' of the state of the art.

[0055] Figures 4 and 5 present results in the reduction of the peaks of oil film pressure, or hydrodynamic pressure, for medium and heavy engines, in conditions of maximum torque and maximum power, respectively.

[0056] It is emphasized that the shell bearing 1 of the present invention achieved a reduction of 13% in the peaks of oil film pressure, both for the condition of functioning of the engine at maximum torque and at maximum power, being capable of achieving reductions of between 5% and 15% in the peaks of oil film pressure, depending on the conditions of the engine.

[0057] In this manner the present invention presents a shell bearing 1 capable of ensuring the minimization of the peaks of oil film pressure causing the mechanical fatigue of the material and reducing the dynamic viscosity of the oil.

[0058] Furthermore, figure 6 presents results in the reduction of the loss of power of medium and heavy engines due to the friction generated by the roughness of the internal surface of the shell bearing 1 in conditions of maximum torque and maximum power, respectively.

[0059] It may be observed that the shell bearing 1, object of the invention, achieved a reduction of 15% in the loss of power due to friction, the engine being at maximum torque, and a reduction of 6% in the loss of power due to friction, the engine being at maximum power, being capable of achieving reductions of up to 19% in the loss of power due to friction, depending on the conditions of the engine.

[0060] Consequently, the present invention presents a shell bearing 1 capable minimizing the loss of power

of the engine through the reduction of the friction between a crankshaft and the internal surface of the shell bearing 1.

[0061] Additionally, in an alternative preferential configuration, the internal surface of the shell bearings comprises a coating which may be composed of, inter alia, various metal alloys, such as, for example, alloys based on copper, on aluminum, or of polymeric compounds (composite polymer), always seeking resistance to abrasion and to wear, in addition to good conformability, providing long working life, including under severe conditions of operation of the engine. The coating of metal may be, inter alia, electrodeposited.

[0062] An example of preferred embodiment having been described, it shall be understood that the scope of the present invention covers other possible variations, being limited solely by the content of the appended claims, included therein the possible equivalents.

CLAIMS

1. A shell bearing (1) for internal combustion engines particularly applicable in a connecting rod having an inclined cap (2), wherein the shell bearing (1) is provided with two semicircular segments which, when fitted in the connecting rod having an inclined cap (2), define an eccentricity profile (3) of the shell bearing (1), wherein the major dimension of this eccentricity profile (3) defines regions of play (4, 4'), characterized in that the regions of play (4, 4') are aligned with a position of zero degrees (0° ± 5°).

2. The shell bearing (1) as claimed in claim 1, characterized in that the position of zero degrees (0° ± 5 °) of alignment of the regions of play (4, 4') is equivalent to the linear direction of motion of the connecting rod having an inclined cap (2) when associated with a piston.

3. The shell bearing (1) as claimed in claim 1, characterized in that it supports working pressures of between 100 MPa and 250 MPa.

4. The shell bearing (1) as claimed in claim 1, characterized in that the internal surface comprises a coating of electrodeposited metal or of composite polymer.

5. An internal combustion engine, characterized in that it comprises at least one shell bearing (1), as claimed in claim 1.

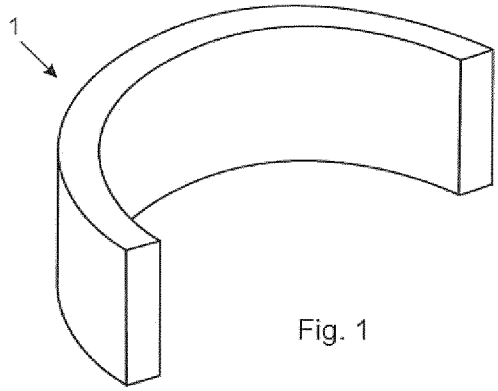

Fig. 1

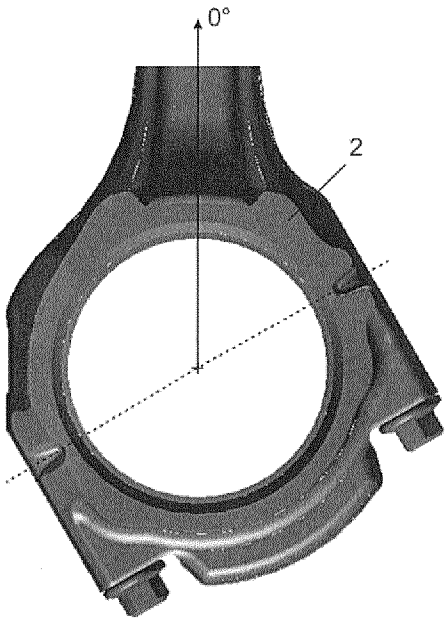

Fig. 2

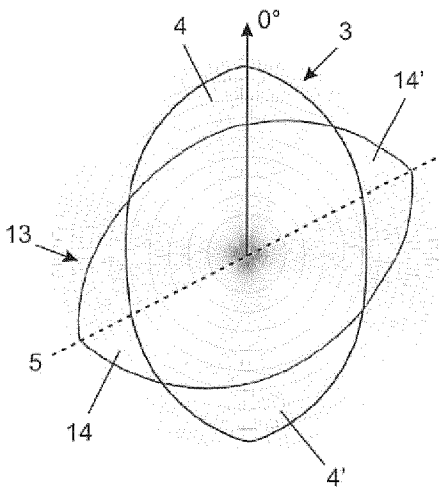

Fig. 3

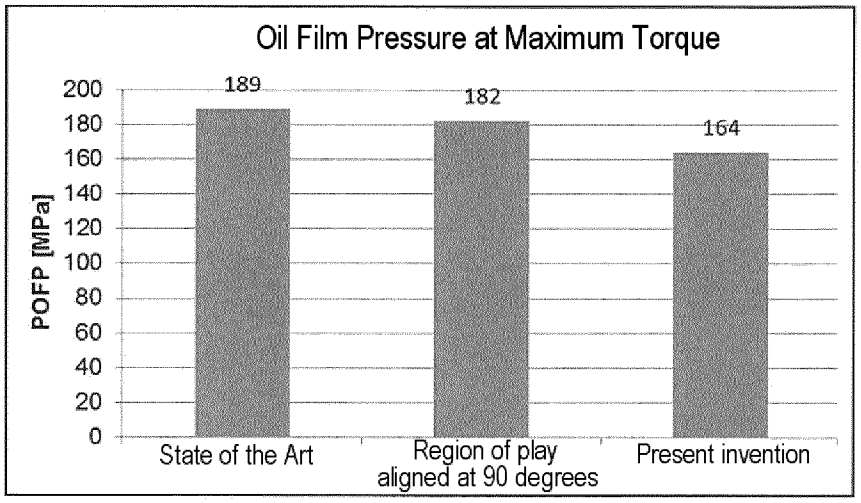
Oil Film Pressure at Maximum Torque
POFP [MPa]
200
180
160
140
120
100
80
60
40
20
0
189
182
164
State of the Art
Region of play aligned at 90 degrees
Present invention

Fig. 4

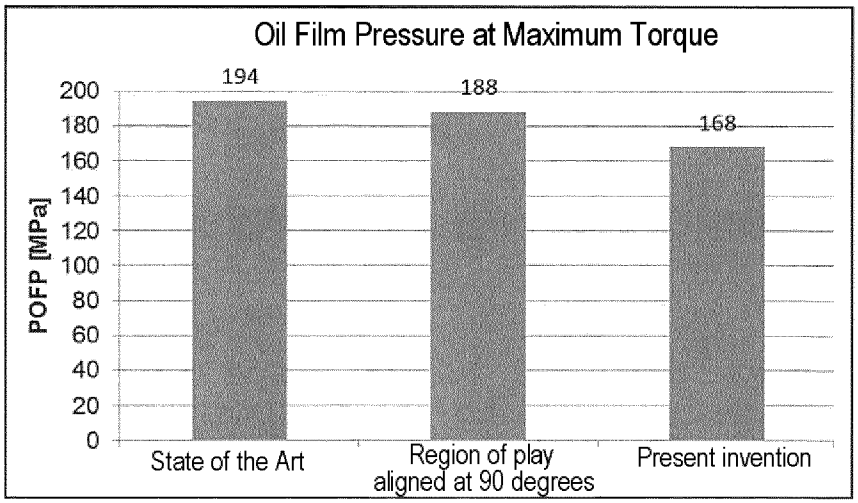
Oil Film Pressure at Maximum Torque
POFP [MPa]
200
180
160
140
120
100
80
60
40
20
0
194
188
168
State of the Art
Region of play aligned at 90 degrees
Present invention

Fig. 5

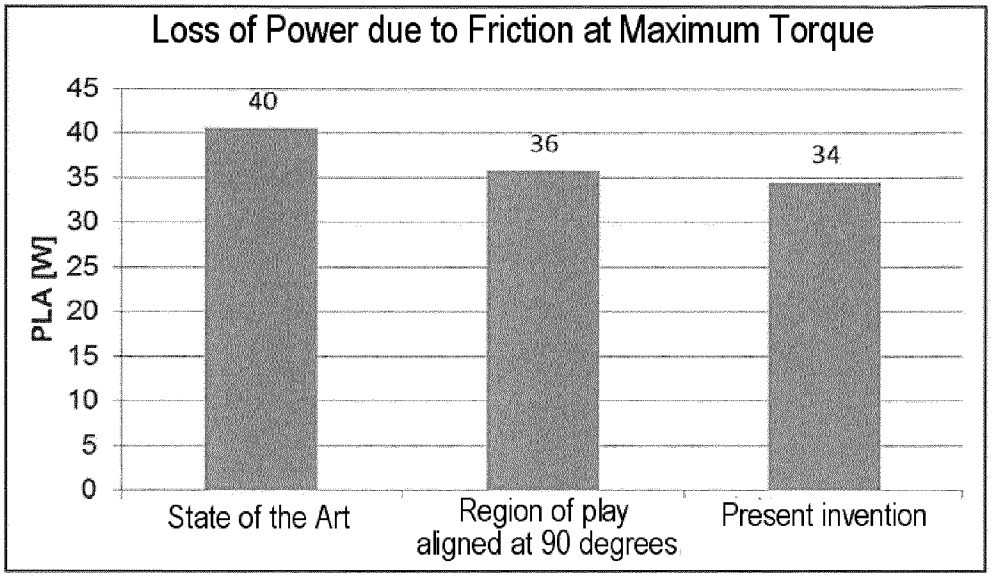
Loss of Power due to Friction at Maximum Torque
PLA [W]
45
40
35
30
25
20
15
10
5
0
40
36
34
State of the Art
Region of play aligned at 90 degrees
Present invention

Fig. 6

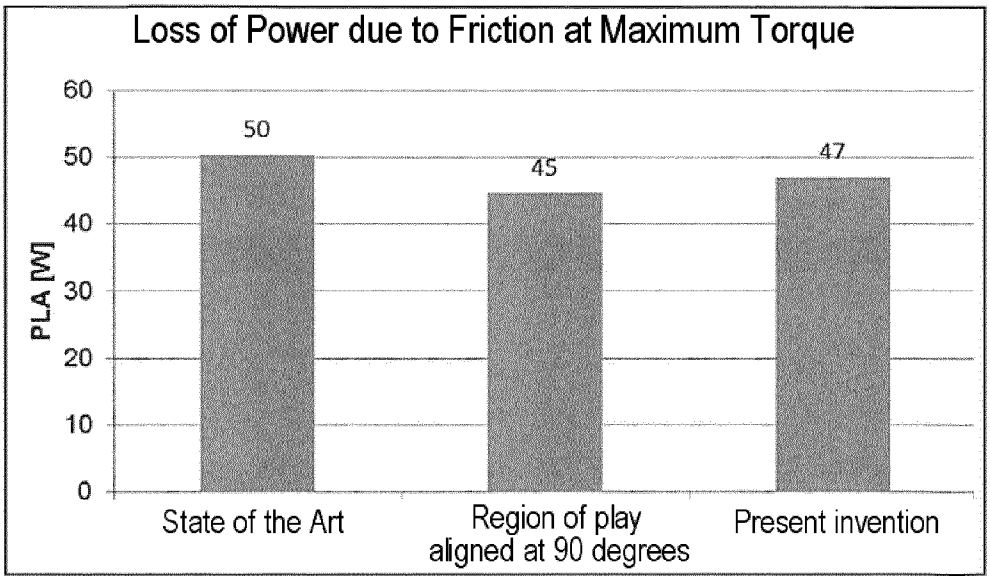
Loss of Power due to Friction at Maximum Torque
PLA [W]
60
50
40
30
20
10
0
50
45
47
State of the Art
Region of play aligned at 90 degrees
Present invention

Fig. 7

INTERNATIONAL SEARCH REPORT

International application No
PCT/EP2017/059939

A. CLASSIFICATION OF SUBJECT MATTER
INV. F16C9/04 F16C7/02 F16C33/04 F16C33/10
ADD.

According to International Patent Classification (IPC) or to both national classification and IPC

B. FIELDS SEARCHED

Minimum documentation searched (classification system followed by classification symbols)
F16C

Documentation searched other than minimum documentation to the extent that such documents are included in the fields searched

Electronic data base consulted during the international search (name of data base and, where practicable, search terms used)
EPO-Internal, WPI Data

C. DOCUMENTS CONSIDERED TO BE RELEVANT

Category*	Citation of document, with indication, where appropriate, of the relevant passages	Relevant to claim No.
X	DE 10 2006 034736 A1 (FEDERAL MOGUL WIESBADEN GMBH [DE]) 31 January 2008 (2008-01-31) paragraph [0001]; figures 2, 4 paragraph [0046] -----	1-5
X	EP 2 921 726 A1 (THYSSENKRUPP METALÚRGICA CAMPO LIMPO LTDA [BR]) 23 September 2015 (2015-09-23) paragraph [0039]; figures 1, 3 -----	1,4,5
X	GB 2 112 475 A (METAL LEVE SA) 20 July 1983 (1983-07-20) page 1, line 6 - line 8; figure 1 -----	1,5
X	US 2 280 385 A (JOHN DICKSON) 21 April 1942 (1942-04-21) figure 4 -----	1,5

☐ Further documents are listed in the continuation of Box C.

☒ See patent family annex.

* Special categories of cited documents :

"A" document defining the general state of the art which is not considered to be of particular relevance

"E" earlier application or patent but published on or after the international filing date

"L" document which may throw doubts on priority claim(s) or which is cited to establish the publication date of another citation or other special reason (as specified)

"O" document referring to an oral disclosure, use, exhibition or other means

"P" document published prior to the international filing date but later than the priority date claimed

"T" later document published after the international filing date or priority date and not in conflict with the application but cited to understand the principle or theory underlying the invention

"X" document of particular relevance; the claimed invention cannot be considered novel or cannot be considered to involve an inventive step when the document is taken alone

"Y" document of particular relevance; the claimed invention cannot be considered to involve an inventive step when the document is combined with one or more other such documents, such combination being obvious to a person skilled in the art

"&" document member of the same patent family

Date of the actual completion of the international search	Date of mailing of the international search report
15 May 2017	22/05/2017

Name and mailing address of the ISA/	Authorized officer
European Patent Office, P.B. 5818 Patentlaan 2 NL - 2280 HV Rijswijk Tel. (+31-70) 340-2040, Fax: (+31-70) 340-3016	Vesselinov, Vladimir

1

INTERNATIONAL SEARCH REPORT

Information on patent family members

International application No
PCT/EP2017/059939

Patent document cited in search report	Publication date	Patent family member(s)	Publication date
DE 102006034736 A1	31-01-2008	DE 102006034736 A1	31-01-2008
		WO 2008011860 A1	31-01-2008
EP 2921726 A1	23-09-2015	CN 106164508 A	23-11-2016
		EP 2921726 A1	23-09-2015
		US 2017130765 A1	11-05-2017
		WO 2015140734 A1	24-09-2015
GB 2112475 A	20-07-1983	BR 8108360 A	20-09-1983
		DE 3246675 A1	30-06-1983
		GB 2112475 A	20-07-1983
		SE 451027 B	24-08-1987
		US 4461585 A	24-07-1984
US 2280385 A	21-04-1942	NONE	