(12) INTERNATIONAL APPLICATION PUBLISHED UNDER THE PATENT COOPERATION TREATY (PCT)

(19) World Intellectual Property Organization
International Bureau

(43) International Publication Date
11 June 2015 (11.06.2015)

WIPO | PCT

(10) International Publication Number
WO 2015/082455 Al

(51) International Patent Classification:
A61F 7/10 (2006.01) *A61F 7/02* (2006.01)
A61F 7/00 (2006.01)

(21) International Application Number:
PCT/EP2014/076220

(22) International Filing Date:
2 December 2014 (02.12.2014)

(25) Filing Language: English

(26) Publication Language: English

(30) Priority Data:
13 195297.0 2 December 2013 (02. 12.2013) EP

(71) Applicant: **ARLINE INNOVATIE B.V.** [NL/NL]; Doctor Schaepmanlaan 29, NL-3972 ET Driebergen-Rijsenburg (NL).

(72) Inventors: **VAN WIJNGAARDEN-SMIT, Caroline;** Uilenkamp 9, NL-3972 XN Driebergen (NL). **VAN WIJNGAARDEN, Arie;** Uilenkamp 9, NL-3972 XN Driebergen (NL).

(74) Agent: **LUTEN, Martin Haaije;** Arnold + Siedsma, Bezuidenhoutseweg 57, NL-2594 AC Den Haag (NL).

(81) Designated States *(unless otherwise indicated, for every kind of national protection available):* AE, AG, AL, AM, AO, AT, AU, AZ, BA, BB, BG, BH, BN, BR, BW, BY, BZ, CA, CH, CL, CN, CO, CR, CU, CZ, DE, DK, DM, DO, DZ, EC, EE, EG, ES, FI, GB, GD, GE, GH, GM, GT, HN, HR, HU, ID, IL, IN, IR, IS, JP, KE, KG, KN, KP, KR, KZ, LA, LC, LK, LR, LS, LU, LY, MA, MD, ME, MG, MK, MN, MW, MX, MY, MZ, NA, NG, NL NO, NZ, OM, PA, PE, PG, PH, PL, PT, QA, RO, RS, RU, RW, SA, SC, SD, SE, SG, SK, SL, SM, ST, SV, SY, TH, TJ, TM, TN, TR, TT, TZ, UA, UG, US, UZ, VC, VN, ZA, ZM, ZW.

(84) Designated States *(unless otherwise indicated, for every kind of regional protection available):* ARIPO (BW, GH, GM, KE, LR, LS, MW, MZ, NA, RW, SD, SL, ST, SZ, TZ, UG, ZM, ZW), Eurasian (AM, AZ, BY, KG, KZ, RU, TJ, TM), European (AL, AT, BE, BG, CH, CY, CZ, DE, DK, EE, ES, FI, FR, GB, GR, HR, HU, IE, IS, IT, LT, LU, LV, MC, MK, MT, NL, NO, PL, PT, RO, RS, SE, SI, SK, SM, TR), OAPI (BF, BJ, CF, CG, CI, CM, GA, GN, GQ, GW, KM, ML, MR, NE, SN, TD, TG).

Published:

— *with international search report (Art. 21(3))*

(54) Title: DEVICE FOR COOLING SCALP

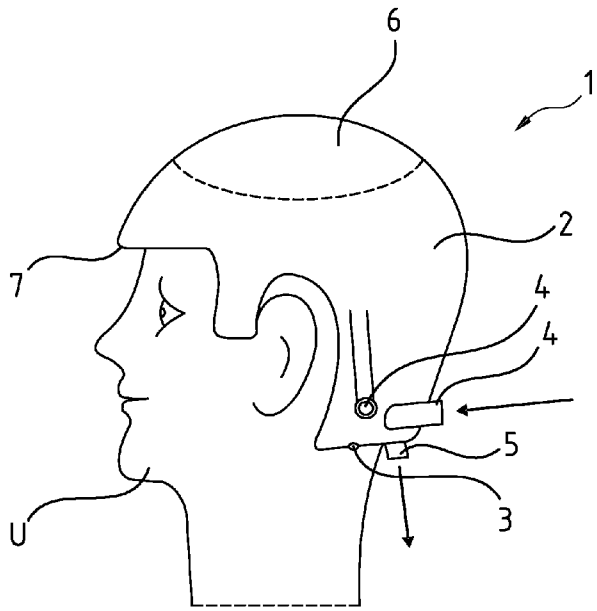

FIG. 1

(57) Abstract: The invention relates to a device for cooling scalp with a cooling fluid, which device comprises: - a skull cap having an inner wall, an outer wall and a plurality of cooling channels extending there between, - at least one inlet connector connected to the cooling channels for supplying a cooling fluid to the cooling channels; - at least one outlet connector connected to the cooling channels for discharging the cooling fluid from the cooling channels; wherein the channels in the skull cap extend from the forehead edge, over the top zone of the cap to the neck edge of the skull cap.

WO 2015/082455 A1

Device for cooling scalp

The invention relates to a device for cooling scalp with a cooling fluid, which device comprises:

- a skull cap having an inner wall, an outer wall and a plurality of cooling channels extending there between,
- at least one inlet connector connected to the cooling channels for supplying a cooling fluid to the cooling channels; and
- at least one outlet connector connected to the cooling channels for discharging the cooling fluid from the cooling channels.

Such a device is for example known from NL 9000752 and is used to cool the scalp of a person. The cooling of the scalp has as result, that the blood circulation is reduced.

In case of chemotherapy, the reduction in blood circulation in the scalp at the moment the cytostatics is injected into a person has the advantage that the hair loss, which is a typical side effect of chemotherapy, is reduced considerable.

In order to achieve a controlled cooling of the scalp, it is necessary that the skull cap has a tight fit. This will ensure that the scalp is cooled uniformly. If no uniform cooling is achieved, this would result in an uneven reduction of blood circulation, causing discomfort to the person wearing the skull cap. In case of chemotherapy, it would also result in an uneven hair loss.

Another problem is that the size of a person' s skull varies requiring different sizes of skull caps to achieve a tight fit of the skull cap on the head of a specific person.

NL 9000752 teaches to manufacture the skull cap out of a deformable material, but states that to have a better fit to the different sizes of heads, an inflatable cushion is provided between a rigid outer shell and the cooling element, such that the cushion can be pushed against the head. Besides a complex construction of the device, the cooling element also has to be larger than the head to be able to be pushed by the cushion against the head of the wearer.

Furthermore, the cooling element of this prior art device has zones, in which the channels are directed in different directions. Each zone of channels has different elasticity in the main directions of the zone. As the channels of the zones are directed in different directions, this will impede the flexibility of the full skull cap, in addition to reduced flexibility of the rigid outer shell.

US 4566455 describes a cooling cap having a tube running in circles around the head. After the tube is arranged around the head, a flexible shower cap like part is pulled over the tube. Although the shower cap is flexible, the diameter of the circle shaped tube defines the fit of the cooling cap. If a too small cooling cap would be arranged on a head, then the tube has to be stretched in longitudinal direction, which is typically the most rigid main direction of a tube.

The object of the invention is to reduce the above mentioned disadvantages.

This object is achieved according to the invention with a device according to the preamble, which device is characterized in that the channels in the skull cap extend from the forehead edge, over the top zone of the cap to the neck edge of the skull cap.

A skull cap typically has an edge running along the forehead of the wearer, then along one ear side to the neck, where the edge will return along the other ear of the wearer back to the forehead. From this edge, the skull cap will have a dome shape, wherein the upper part of the dome shape can be called a top zone.

With the device according to the invention, the channels extend from the forehead edge, over the top zone of the cap to the neck edge of the skull cap. When the skull cap is worn, the channels will run substantially perpendicular to the plane extending through the forehead and neck of the wearer, which will typically be the largest diameter of the head. If the skull cap needs to be radially expanded to fit around this largest diameter, the channels will be subjected to a stretch force perpendicular to the length of the channel. If the channel would have a circular cross section, then the cross section would become oval as a result of this stretch force. The length of the channel would not chance substantially. So, the required expansion length is obtained from reducing the height of the channels, making the skull cap more flexible than the prior art skull caps, in which the channels need to be stretched in length direction.

A simple construction of the skull cap is obtained if the skull cap further comprises connecting walls for connecting the inner wall with the outer wall while defining the cooling channels there between. The channels may hereby have substantially rectangular cross section.

Preferably, the skull cap is of an elastic material, such as silicone. Silicone material is very flexible and can be easily managed during manufacturing of the skull cap.

In a preferred embodiment of the device according to the invention the cooling channels are parallel to each other. By arranging the cooling channels parallel, an even distribution of the cooling fluid is achieved and furthermore, the stretchability of the cooling cap is more uniform. In another embodiment of the device according to the invention the inner wall, outer wall and the plurality of connecting walls are formed by flexible hoses.

Flexible hoses are readily available and one can easily manufacture a device according to the invention at low costs. Furthermore, by using a hose, it is ensured that no leakage will occur over the length of the cooling channels.

It is preferred if the channels extend substantially rectilinear, seen in the curving plane of the skull, from the forehead edge, over the top zone of the cap to the neck edge of the skull cap. This ensures that the channels have a sufficiently large cross section, even in stretched state.

To be able to locally regulate the temperature on the skull, it is preferred if the skull cap comprises a plurality of inlets connected to respective plurality of cooling channels. Using the at least two separate inlets, a separate supply of cooling fluid to the cooling channels connected therewith is possible.

In a very preferred embodiment of the device according to the invention adjacent channels are alternately connected to each other near the forehead edge and the neck edge to form meandering channels. With the meandering channels the channel will have a return part, such that supply and discharge of a cooling channel can be at the same location, for example in the neck of the wearer, which will increase the wear comfort.

In still further preferred embodiment of the device according to the invention the meandering channels are divided into separate zones and wherein additional inlet connectors are provided for separately supplying cooling fluid to the meandering channel zones. Having different zones of meandering cooling channels provides the possibility to cool parts of the scalp further than other parts or to provide more cooling to parts of the scalp, which produce more heat. The device is hereto preferably comprising at least two pumps interconnected with respective at least two inlets for separately supplying cooling fluid to the inlets.

Preferably, the separate meandering channel zones are connected to the at least one outlet connector. As soon as the cooling fluid has flowed through the different cooling channel zones it

can be collected at one outlet connector, where the fluid is recirculated to a cooling device, to be cooled again and be supplied again to the channels.

Yet another embodiment of the device according to the invention comprises at least one temperature sensor extending from the inner wall into the inner space of the skull cap. The at least one temperature sensor can be used to measure the temperature of the scalp to regulate the cooling of the device. Preferably, the temperature sensitive part of the temperature sensor is suspended flexibly. The flexible suspension of the temperature sensitive part enables a good contact with the scalp without being pushed too hard into the scalp, which could cause discomfort to the wearer. Variations in distance between the skull cap and the skull due to varying hair thickness can hereby be compensated.

It is preferred if the temperature sensor is formed as a separate part from the skull cap, wherein the temperature sensor can be inserted into and guided through said cap to ensure in good contact between the temperature sensitive part and the skull. The temperature sensor is preferably rod shaped, wherein the temperature sensitive part is provided at a distal location of said rod. Preferably, the temperature sensitive part is moveable with respect to the rod like base body of the temperature sensor in at least the longitudinal direction of said rod.

In order to receive the temperature sensor, it is preferred if the skull cap comprises a passage extending between the outer wall and the inner wall for receiving the temperature sensor. The sensor can then be inserted manually through said passage and pushed onto the skull with sufficient force to ensure good contact between the sensor and the skull.

According to a preferred embodiment, the passage is formed in a connecting wall extending between two channels. This ensures that the passage does not intersect a channel. The passage preferably has a cylindrical shape, wherein the sidewalls of said passage are formed by a connecting wall.

A further preferred embodiment is provided with at least two temperature sensors associated with at least two cooling channels and further comprises a controller for controlling the two pumps to supply fluid to the two cooling channels in accordance with the measured temperatures by said temperature sensors associated with said cooling channels. This allows locally controlling cooling in accordance with the locally measured temperatures.

According to a further preferred embodiment, a cooling channel, preferably each cooling channel, is provided with guiding means provided on the inner walls for creating a swirling flow of cooling fluid in said cooling channel. A swirling movement, seen along the longitudinal axis of the cooling channel, improves the cooling capacity. The cooling channel is hereto preferably provided with a helically shaped rib extending along the longitudinal axis of said cooling channel.

These and other features of the invention will be elucidated in conjunction with the accompanying drawings.

Figure 1 shows a side view of a device according to the invention.
Figure 2 shows a back view of the device of figure 1.
Figure 3 shows the inner wall of the device according to figure 1.
Figure 4 shows the outer wall with the connecting walls of figure 1.
Figure 5 and 6 show an alternative temperature sensor in perspective, respectively cross-section.
Figure 7 shows a passage for the sensor in the cap.
Figure 8A and B show the temperature sensor of figure 5 in detail.
Figure 9 shows a channel provided with internal ribs.

Figure 1 shows a side view of a device 1 according to the invention. The device 1 is worn by a user U. The device 1 has a skull cap 2, with near the neck edge 3 a five inlet connectors 4 and two outlet connectors 5. (See also figure 2) The skull cap 2 had a top zone 6 and a forehead edge 7.

Figure 3 shows the inner wall 8 of the device 1 according to figure 1. The device 1 is preferably build out of two injection molded parts 8, 10 made of a flexible material, such as silicone. The inner wall 8 has on the side directed to the scalp of the wearer U a number of temperature sensors 9 for registering the temperature of the scalp. Based on these measurements more of less cooling fluid can be fed to the inlet connectors 4. For example a controller, like a computer program, can be used, in which the desired temperature for each zone around each temperature sensor 9 can be set. The controller will then supply more of less cooling fluid to each separate cooling zone (further explained below) to achieve the desired temperature using separate pumps connected to each of the inlets. It would also be possible to regulate the temperature of the cooling fluid supplied to each zone, in order to control the desired temperature of each zone. The controller uses the set temperature and the measured temperature in a suitable control, like a PID control.

Figure 4 shows the outer wall 10 of the device of figure 1. A plurality of connecting walls are arranged on the inside of the outer wall 10, such that a plurality of parallel channels 11 are

provided. These channels 11 extend from the forehead edge 7, over the top zone 6 of the cap 2 to the neck edge 3 of the skull cap 2. The channels 11 are connected near the neck edge 3 or the forehead edge 7 with intermediate channels 12 to provide meandering channels. This ensures that separate meandering channels are provided, which are fed with a cooling fluid via the inlet connectors 4 and end at the openings 13, 14, 15, 16, 17 after which the fluid is collected in a space near the neck edge 3.

In figures 5 and 6 a cap 2 is shown which is provided with a passage 20 for receiving a rod like temperature sensor 9a. The passage 20 extends between the outer wall 10 and the inner wall 8 and is shaped to closely receive the sensor 9a, or at least the distal end thereof as will be explained in greater detail below. The passage 20 is formed as a cylinder formed along a connecting wall 11a, see figure 7, thereby forming a passage between two channels 11. The inner diameter of the channel 20 corresponds to the outer diameter of the rod shaped temperature sensor 9a as shown in greater detail in figures 8A and 8B.

The temperature sensor 9a is provided with a sensing tip 95 which is moveable in the longitudinal direction L with respect to the body 91. The tip 95 is provided with an oblique surface 95a which is arranged for engaging the skull of the user U. The surface 95a is hereto is use substantially parallel to the plane of the surface of the inner wall 8 at the location of the passage, see in particular figure 6. The proximal part of the connector is provided with a handle 93 and a connector 92 which is connected with a lead 94 of adjustable length to the tip 95.

Figure 9 shows a cooling channel 11 in isolation, which is formed by two side walls 11a, the outer wall 10 and the inner wall 8. Provided on the inner walls 8, 10, 11a defining this channel 11 is provided a rib 111 which extends helically along the longitudinal axis A of the channel 11. The helical rib 111 thereby induces a swirling flow of cooling fluid in the channel 11, which improves the cooling capacity of the channel 11 and thereby the cap 2.

The inner wall 8 is a preferably a separate injection molded piece and the outer wall 10 with the connecting walls is another separate injection molded piece. Both separate pieces 8, 10 are joined together, for example by welding or by adhesion, to form a liquid tight skull cap 2 having an increased flexibility, such that it will tightly fit on a larger number of sizes of heads.

Claims

1. Device for cooling scalp with a cooling fluid, which device comprises:
   - a skull cap having an inner wall, an outer wall and a plurality of cooling channels extending there between,
   - at least one inlet connector connected to the cooling channels for supplying a cooling fluid to the cooling channels;
   - at least one outlet connector connected to the cooling channels for discharging the cooling fluid from the cooling channels;

   characterized in that
   the channels in the skull cap extend from the forehead edge, over the top zone of the cap to the neck edge of the skull cap.

2. Device according to claim 1, wherein the skull cap further comprises connecting walls for connecting the inner wall with the outer wall while defining the cooling channels there between.

3. Device according to claim 1 or 2, wherein the skull cap is of an elastic material, such as silicone.

4. Device according to claim 1, 2 or 3, wherein the cooling channels are parallel to each other.

5. Device according to claim 4, wherein the inner wall, outer wall and the plurality of connecting walls are formed by flexible hoses.

6. Device according to any of the preceding claims, wherein the channels extend substantially rectilinear from the forehead edge, over the top zone of the cap to the neck edge of the skull cap.

7. Device according to any of the preceding claims, comprising a plurality of inlets connected to respective plurality of cooling channels.

8. Device according to any of the preceding claims, wherein adjacent channels are alternately connected to each other near the forehead edge and the neck edge to form meandering channels.

9. Device according to claim 8, wherein the meandering channels are divided into separate zones and wherein additional inlet connectors are provided for separately supplying cooling fluid to the meandering channel zones.

10. Device according to claim 9 wherein the separate meandering channel zones are connected to the at least one outlet connector.

11. Device according to claim 7 or 9, comprising at least two pumps interconnected with respective at least two inlets for separately supplying cooling fluid to the inlets.

12. Device according to any of the preceding claims, further comprising at least one temperature sensor extending from the inner wall into the inner space of the skull cap.

13. Device according to claim 12, wherein the temperature sensitive part of the temperature sensor is suspended flexibly.

14. Device according to claim 12 or 13, wherein the skull cap comprises a passage extending between the outer wall and the inner wall for receiving the temperature sensor.

15. Device according to claims 2 and 14, wherein the passage is formed in a connecting wall extending between two channels.

16. Device according to at least claim 11 and 12, provided with at least two temperature sensors associated with at least two cooling channels and further comprising a controller for controlling the two pumps to supply fluid to the two cooling channels in accordance with the measured temperatures by said temperature sensors associated with said cooling channels.

17. Device according to any of the preceding claims, wherein at cooling channel is provided with guiding means provided on the inner walls for creating a swirling flow of cooling fluid in said cooling channel.

18. Device according to claim 17, wherein the cooling channel is provided with a helically shaped rib extending along the longitudinal axis of said cooling channel.

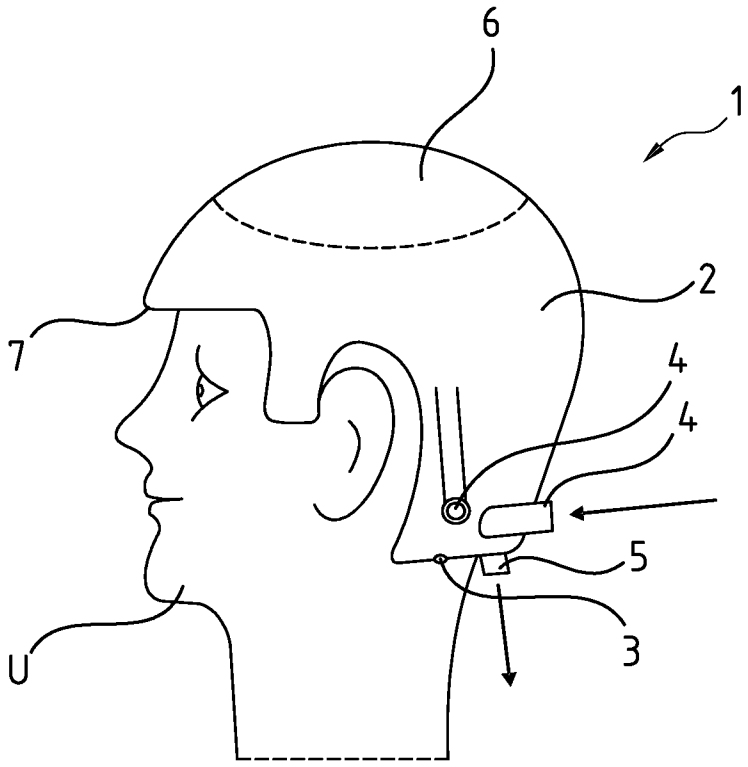

FIG. 1

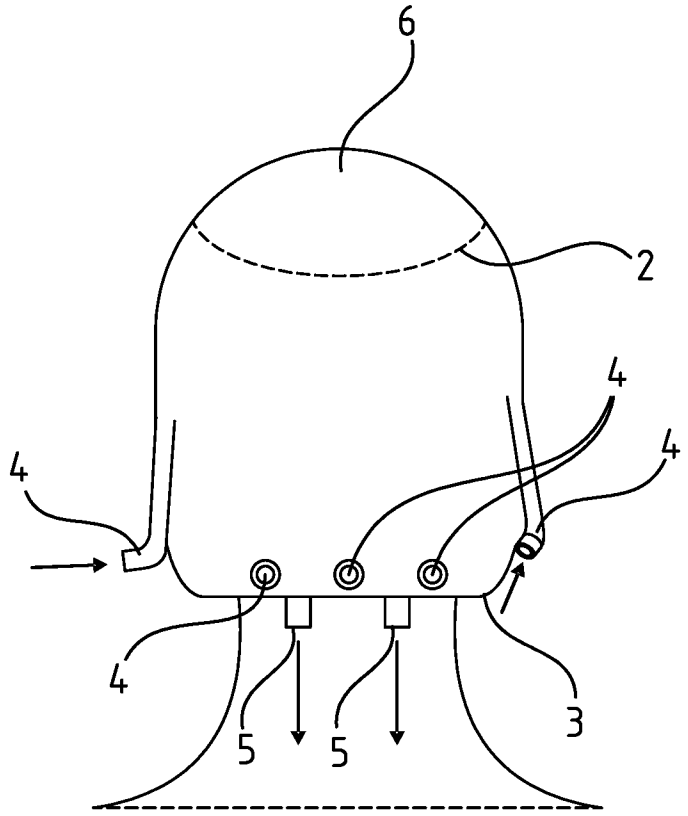

FIG. 2

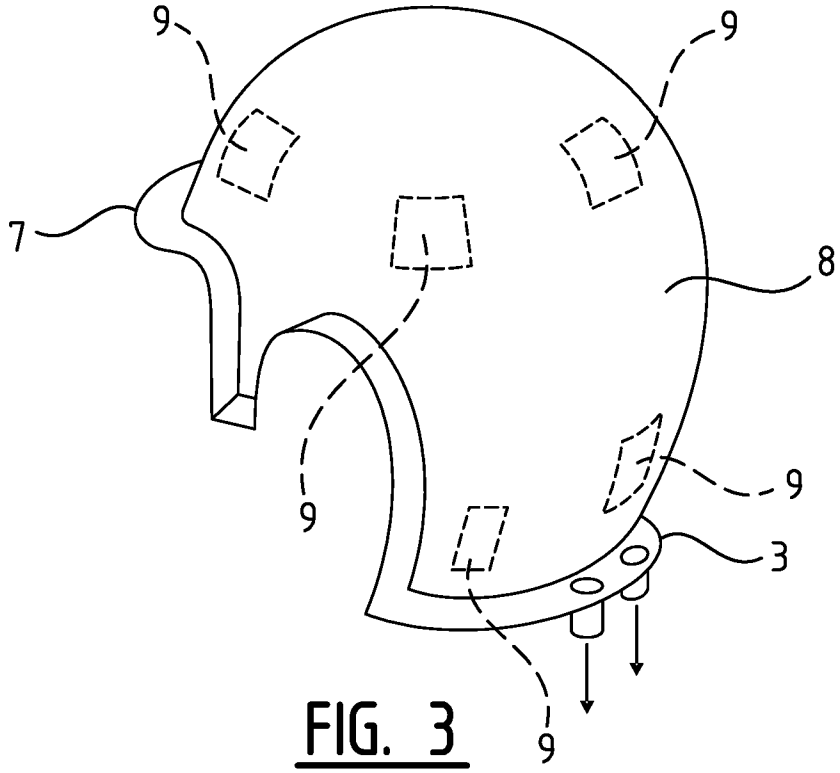

FIG. 3

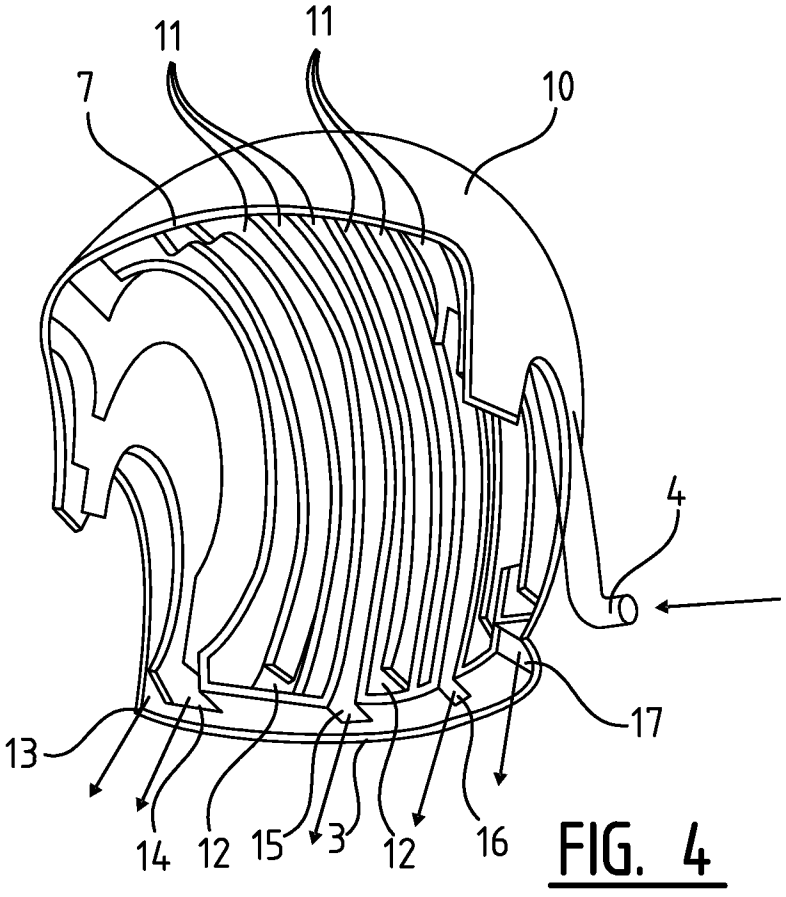

FIG. 4

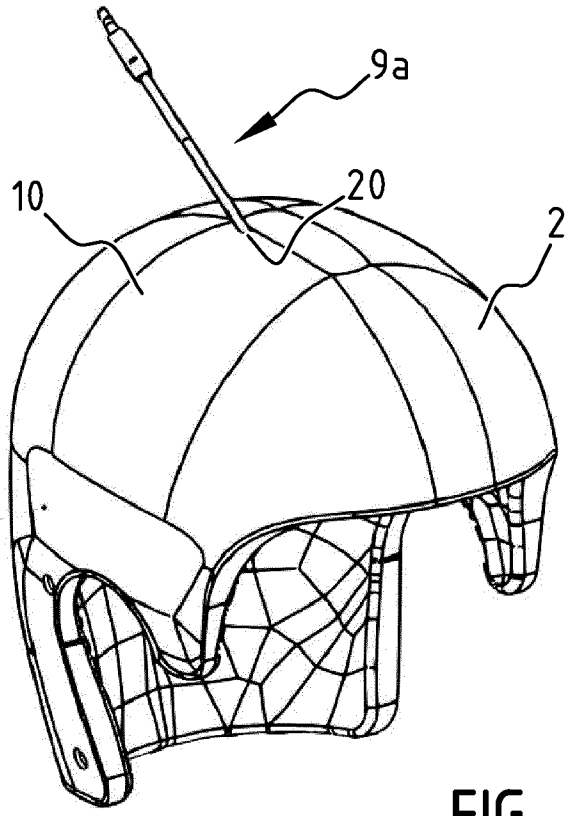

FIG. 5

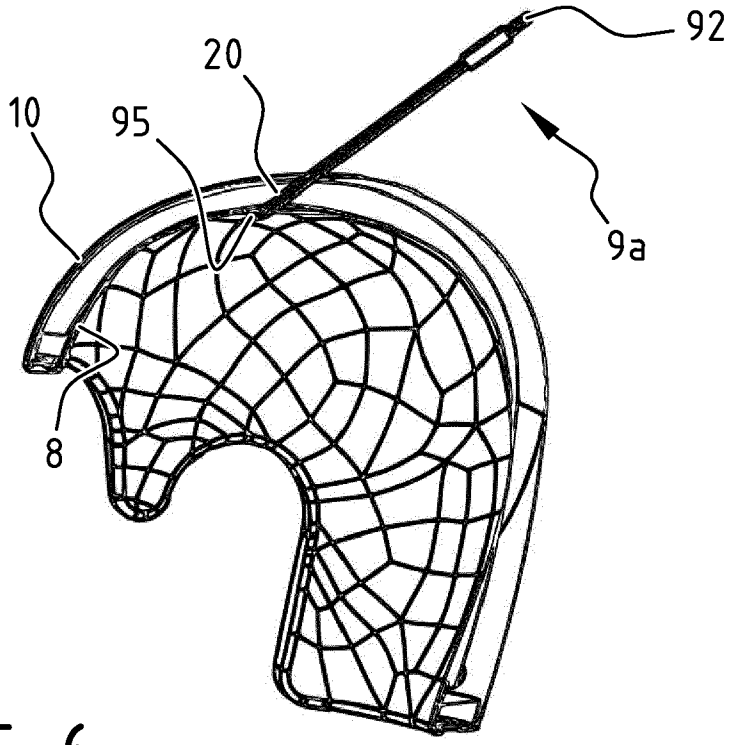

FIG. 6

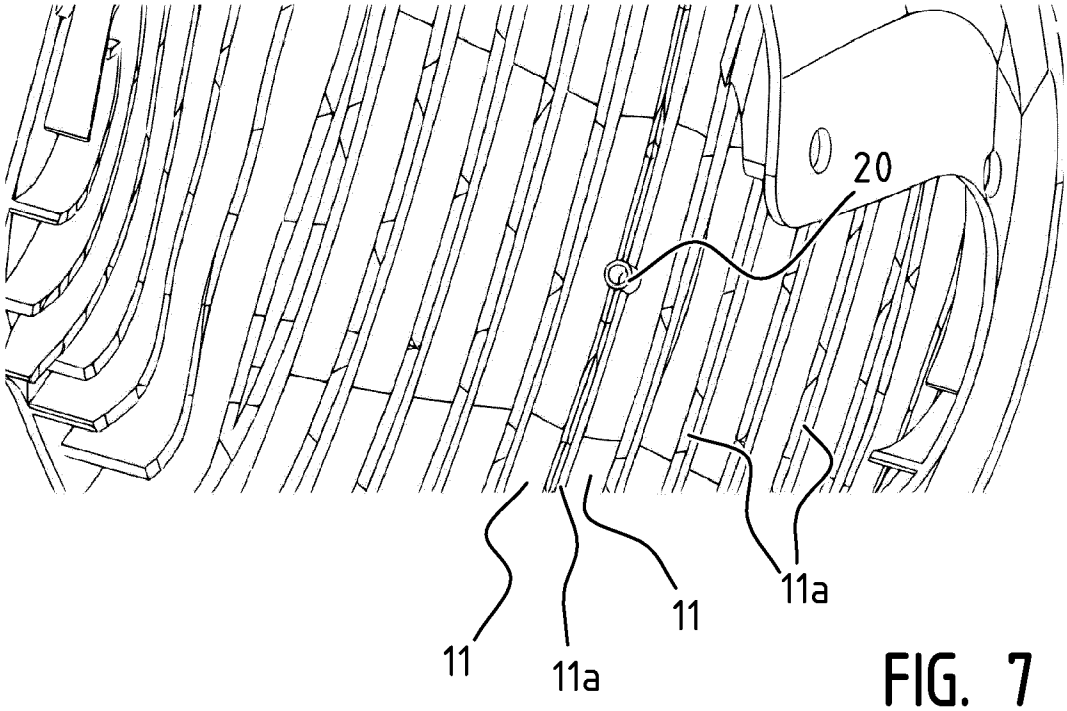

FIG. 7

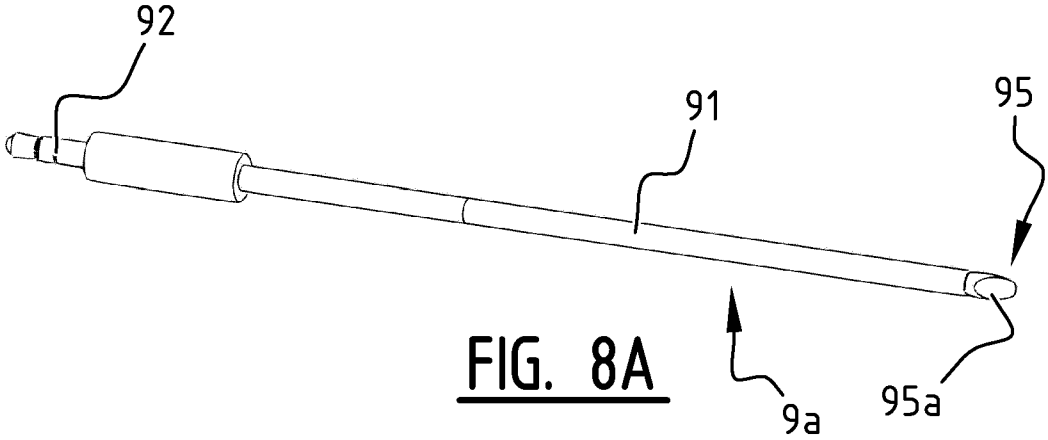

FIG. 8A

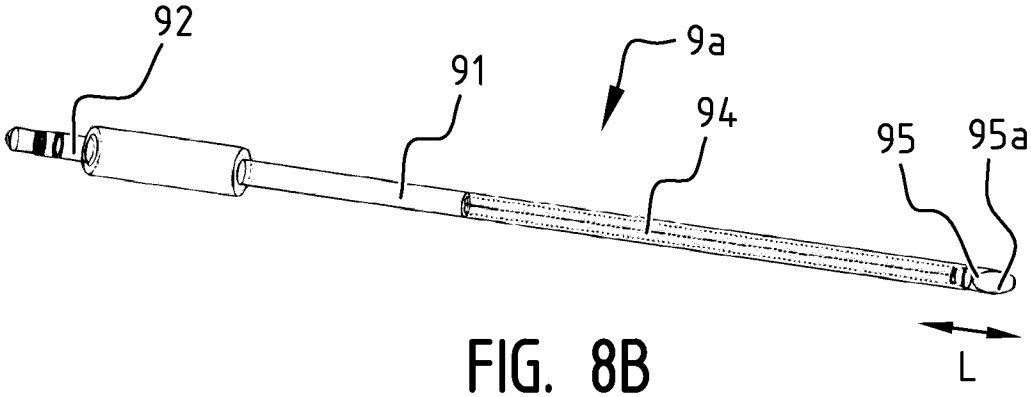

FIG. 8B

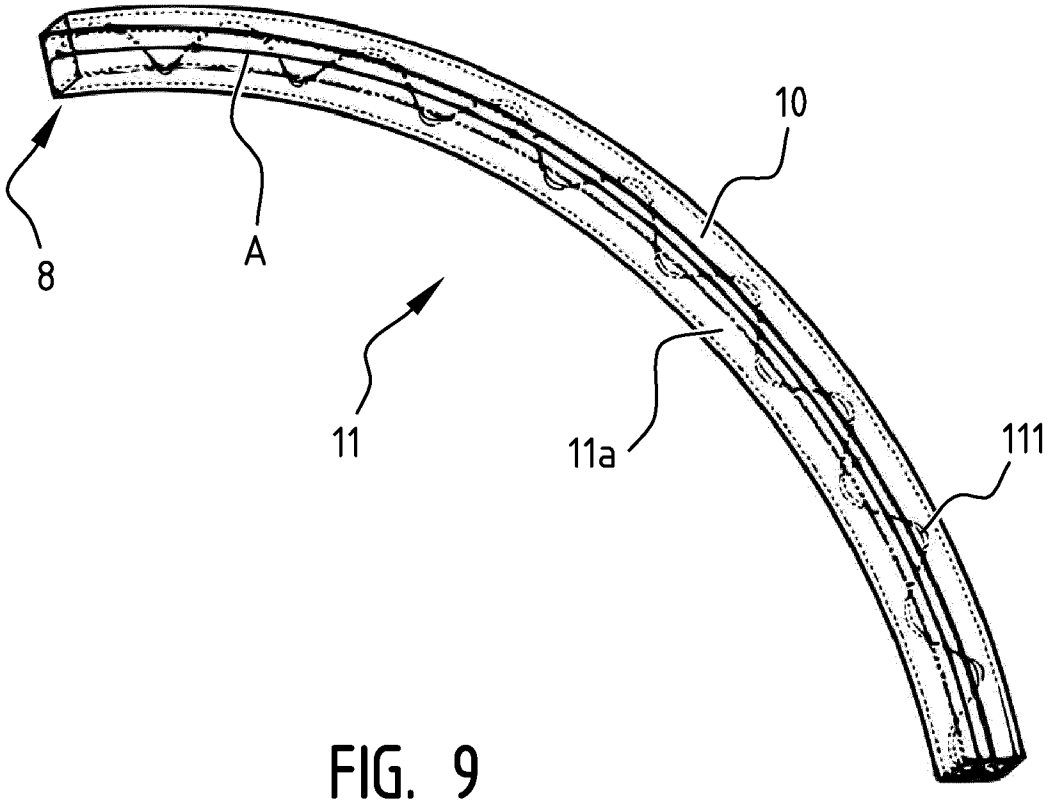

FIG. 9

INTERNATIONAL SEARCH REPORT

International application No
PCT/EP2014/076220

A. CLASSIFICATION OF SUBJECT MATTER
INV. A61F7/10
ADD. A61F7/00 A61F7/02

According to International Patent Classification (IPC) or to both national classification and IPC

B. FIELDS SEARCHED

Minimum documentation searched (classification system followed by classification symbols)
A61F

Documentation searched other than minimum documentation to the extent that such documents are included in the fields searched

Electronic data base consulted during the international search (name of data base and, where practicable, search terms used)

EPO-Internal , WPI Data

C. DOCUMENTS CONSIDERED TO BE RELEVANT

Category*	Citation of document, with indication, where appropriate, of the relevant passages	Relevant to claim No.
X Y	JP 2002 272775 A (FUJI KURA RUBBER LTD) 24 September 2002 (2002-09-24) abstract; figures 1,2,3,6 -----	1-6,8 7,9-11 , 16-18
X	JP 2001 258924 A (FUJI KURA RUBBER LTD) 25 September 2001 (2001-09-25) abstract; figures 1-3 -----	1-6,8
X Y	WO 2008/099017 Al (DIGNITANA AB [SE] ; STORMBY JOHAN [SE]) 21 August 2008 (2008-08-21) page 6, line 3 - line 26; figure 4 page 8, line 8 - line 28 page 11, line 18 - page 12, line 17 -----	1-5 , 12-15 9,10

-/- ·

[X] Further documents are listed in the continuation of Box C.

[X] See patent family annex.

* Special categories of cited documents :

"A" document defining the general state of the art which is not considered to be of particular relevance

"E" earlier application or patent but published on or after the international filing date

"L" documentwhich may throw doubts on priority claim(s) orwhich is cited to establish the publication date of another citation or other special reason (as specified)

"O" document referring to an oral disclosure, use, exhibition or other means

"P" document published prior to the international filing date but later than the priority date claimed

"T" later document published after the international filing date or priority date and not in conflict with the application but cited to understand the principle or theory underlying the invention

"X" document of particular relevance; the claimed invention cannot be considered novel or cannot be considered to involve an inventive step when the document is taken alone

"Y" document of particular relevance; the claimed invention cannot be considered to involve an inventive step when the document is combined with one or more other such documents, such combination being obvious to a person skilled in the art

"&" document member of the same patent family

Date of the actual completion of the international search	Date of mailing of the international search report
26 January 2015	04/02/2015

Name and mailing address of the ISA/	Authorized officer
European Patent Office, P.B. 5818 Patentlaan 2 NL - 2280 HV Rijswijk Tel. (+31-70) 340-2040, Fax: (+31-70) 340-3016	Mayer-Martenson , E

1

Form PCT/ISA/210 (second sheet) (April 2005)

INTERNATIONAL SEARCH REPORT

International application No
PCT/EP2014/076220

C(Continuation). DOCUMENTS CONSIDERED TO BE RELEVANT

Category*	Citation of document, with indication, where appropriate, of the relevant passages	Relevant to claim No.
X	NL 9 000 752 A (LEUVEN K U RES & DEV LEUVEN K U RES & DEV [BE]) 16 October 1991 (1991-10-16) cited in the application page 3, line 28 - line 35; figure 1	1,2,4
Y	US 2009/306748 A1 (MOLLENDORF JOSEPH C [US] ET AL) 10 December 2009 (2009-12-10) paragraph [0045]	7,11,16
Y	US 2007/118194 A1 (MASON BRADLEY R [US] ET AL) 24 May 2007 (2007-05-24) paragraph [0062]; figures 3,4	17,18
A	US 6 178 562 B1 (ELKINS WILLIAM [US]) 30 January 2001 (2001-01-30) abstract; figure 5	1-18
A	US 2008/082150 A1 (SCHOCK ROBERT B [US] ET AL) 3 April 2008 (2008-04-03) paragraph [0079]	7,11
A	US 6 716 236 B1 (TZENG ELBERT [US] ET AL) 6 April 2004 (2004-04-06) column 7, line 17 - line 25; figure 1	17,18

1

INTERNATIONAL SEARCH REPORT

Information on patent family members

International application No
PCT/EP2014/076220

Patent document cited in search report		Publication date	Patent family member(s)			Publication date
JP 2002272775	A	24-09-2002	NONE			
JP 2001258924	A	25-09-2001	NONE			
WO 2008099017	A1	21-08-2008	AT	503445	T	15-04-2011
			CN	101631520	A	20-01-2010
			EP	2117484	A1	18-11-2009
			ES	2364102	T3	24-08-2011
			JP	5133355	B2	30-01-2013
			JP	2010517717	A	27-05-2010
			KR	20090110369	A	21-10-2009
			US	2010186436	A1	29-07-2010
			US	2012041526	A1	16-02-2012
			WO	2008099017	A1	21-08-2008
NL 9000752	A	16-10-1991	NONE			
US 2009306748	A1	10-12-2009	NONE			
US 2007118194	A1	24-05-2007	EP	1954226	A2	13-08-2008
			US	2007118194	A1	24-05-2007
			WO	2007061526	A2	31-05-2007
US 6178562	B1	30-01-2001	TW	467739	B	11-12-2001
			US	6178562	B1	30-01-2001
			WO	0187197	A1	22-11-2001
US 2008082150	A1	03-04-2008	CA	2661523	A1	28-02-2008
			EP	2068789	A2	17-06-2009
			JP	2010501284	A	21-01-2010
			US	2008082150	A1	03-04-2008
US 6716236	B1	06-04-2004	NONE			