Aug. 21, 1923. 1,465,278

W. J. MELCHIOR

LIFTING JACK

Filed Aug. 25, 1921 2 Sheets-Sheet 1

Fig. 1.

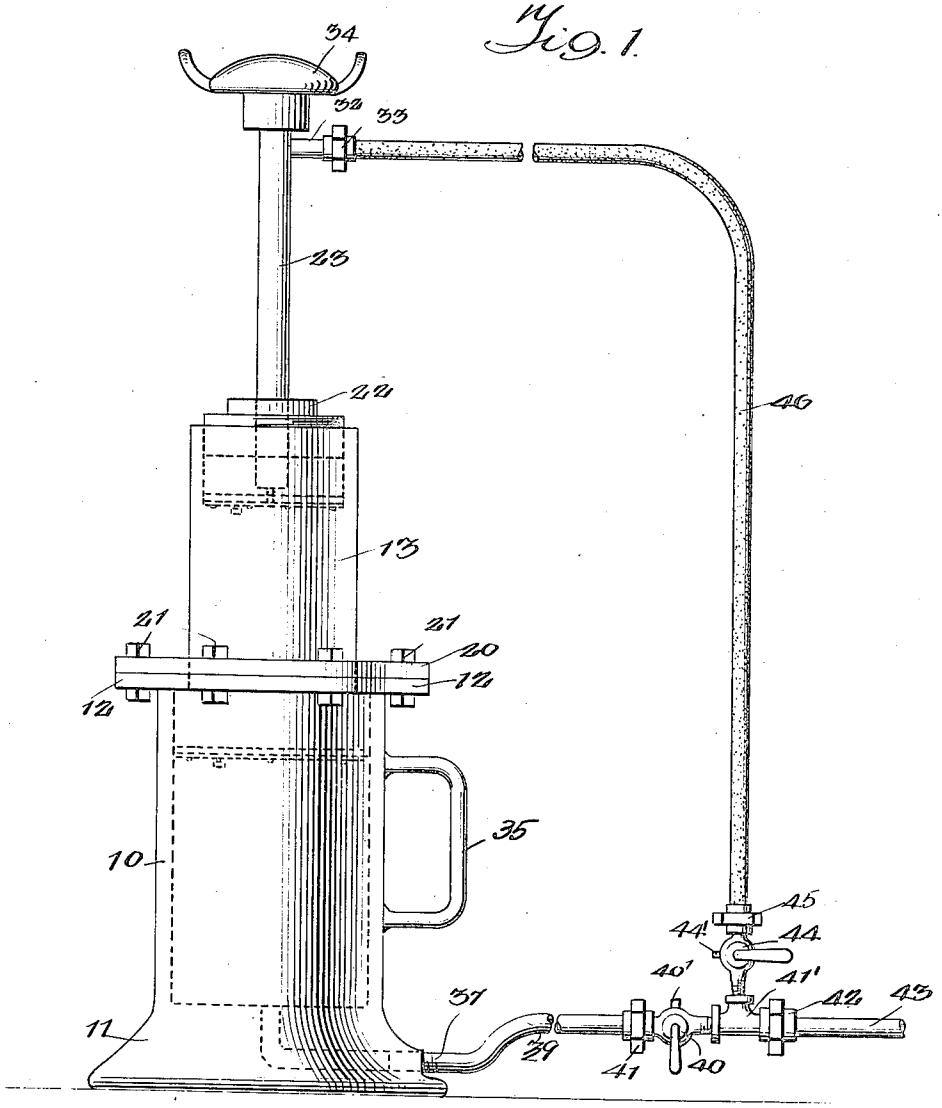


WITNESSES

George C. Meyers

INVENTOR

W. J. Melchior,

BY Munn & Co.

ATTORNEYS

Aug. 21, 1923. 1,465,278

W. J. MELCHIOR

LIFTING JACK

Filed Aug. 25, 1921 2 Sheets-Sheet 2

Fig. 2.

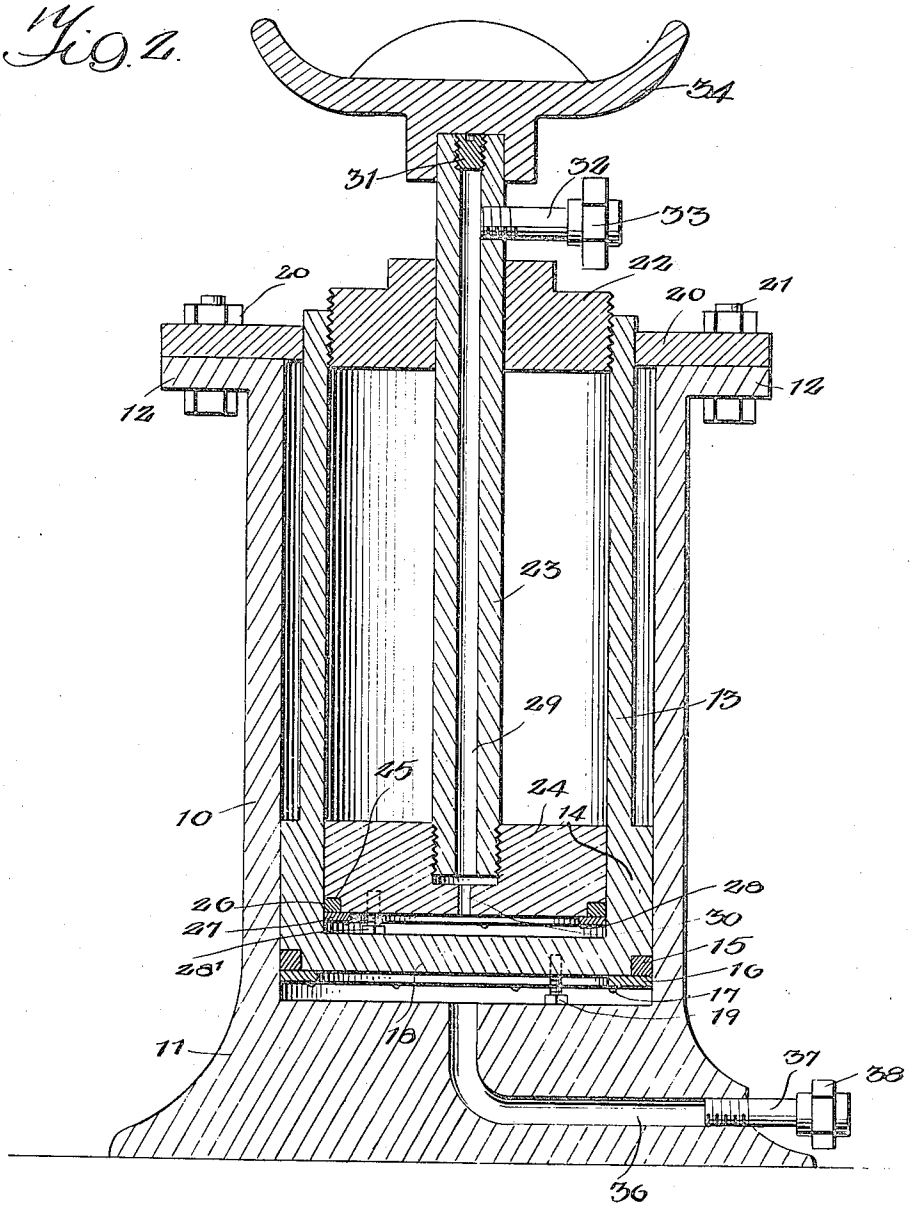


WITNESSES
George C. Myers

INVENTOR
W. J. MELCHIOR,
BY Munn & Co.
ATTORNEYS

Patented Aug. 21, 1923. 1,465,278

# UNITED STATES PATENT OFFICE.

WILLIAM J. MELCHIOR, OF FARGO, NORTH DAKOTA.

## LIFTING JACK.

Application filed August 25, 1921. Serial No. 495,285.

*To all whom it may concern:*

Be it known that I, WILLIAM J. MELCHIOR, a citizen of the United States, and a resident of Fargo, in the county of Cass and State of North Dakota, have invented certain new and useful Improvements in Lifting Jacks, of which the following is a specification.

This invention relates to a lifting jack and more particularly to a lifting jack which is operable by compressed air.

The object of the invention is to provide a jack of the above character which is portable and particularly adapted for raising automobiles, vehicles or the like in a quick and positive manner.

It is also an important object of the invention that the lifting distance of the jack be considerably greater than that possible with the usual portable jack now commonly employed for the same purpose.

Other objects and objects relating to details of construction, combination and arrangement of parts will hereinafter appear in the detail description to follow.

The invention is illustrated by way of example in the accompanying drawings, in which:—

Figure 1 is a side elevation showing a lifting jack constructed in accordance with the present invention, and also showing the means for connecting the same with a source of compressed air,

Figure 2 is a vertical central sectional view of the same.

Referring to the drawings more particularly, 10 indicates a cylinder which is vertically disposed and having formed therewith at its one end a base 11 adapted to form a closure for the lower end of the cylinder, as shown, at the other end of the cylinder there is formed a flange 12, the purpose of which will later be made apparent. Within the cylinder 10 there is slidably positioned a hollow piston 13. The piston 13 is formed with an enlargement 14 adjacent its lower end and below the enlargement there is positioned a packing ring 15 which is preferably of leather or the like. The packing ring 15 is held in position by a washer 16, said washer being secured to the piston by the means of screws as indicated at 17. The lower end of the piston is formed with a closure 18 which is held in spaced relation with the base 11 by a set screw 19. As is obvious by manipulating the set screw 19, the chamber between the end closure 18 of the piston 13 and the base 11 may be increased or decreased as desired.

An annular plate member 20 encircles the top of the piston 13, said plate member being secured to the flange 12 by the bolts 21.

The upper end of the piston 13 is interiorly threaded and adapted to receive the threaded plug 22. The plug 22 has passing centrally therethrough the stem 23 which has threaded upon its lower end the piston head 24, as shown. The piston head 24 is adapted to slide within the hollow piston 13 and is formed with an offset portion as at 25, which is adapted to receive the packing ring 26, the packing ring being preferably of leather or a similar material. The packing ring is held in position by the washer 27, said washer being in turn secured to the piston head 24 by the means of the screw 28. A set screw 28′ is threaded into the lower side of the face of the piston head 24 and by manipulating the same the chamber existing between the piston head 24 and the head closure 18 of the piston 13 may be decreased or increased as desired.

The stem 23 is formed with a bore 29 which extends the entire length thereof, said bore communicating in its lower end with the orifice 30 formed in the piston head 24. The upper end of the bore is closed by a plug 31 and adjacent the upper end of the stem there is threaded therein a nipple 32, said nipple carrying on its outer end a coupling 33; also upon the upper end of the stem 23 there is removably positioned a saddle 34 which is adapted to engage beneath the axle of an automobile or other vehicle.

The cylinder 10 is formed with a handle 35 by which the lifting jack as a whole may be carried about. In the base 11 there is formed a passage 36 which communicates in its one end with the interior of the cylinder 10, and at its other end with a nipple 37. The nipple 37 carries a coupling member 38 to which there is connected a flexible hose 39, said hose in turn communicating with the two-way valve 40 through the coupling member 41. The two-way valve 40 is adapted to permit the passage of air therethrough and into the hose 39, or when swung in proper position adapted to permit air to pass from the hose 39 through a nipple 40′ formed upon the valve member. The valve member 40 is connected with a T-fitting 41′, said T-fitting carrying a coupling 42 by which the same may be

connected with a compressed air supply pipe 43; also there is connected with the T-fitting 41′ a second two-way valve 44, said valve carrying a coupling 45 which is connected with the one end of a flexible hose 46, the other end of the hose 46 being connected with the coupling 33 carried by the nipple 32. The valve member 44 is also provided with an eduction nipple 44′ which may be brought into communication with the flexible hose 46 by the manipulation of the operating handle of the valve 44.

In the operation of the present device, the jack is placed beneath the automobile so that its saddle may engage the axle thereof, and when air is admitted through the valve 40 into the cylinder 10 and beneath the piston 13, the piston 13 will be raised and the vehicle lifted. It may be observed that by properly manipulating the valve 40 that the vehicle may be raised at different heights by the piston 13. In case the piston 13 does not sufficiently raise the vehicle then the valve 44 may be manipulated for admitting compressed air beneath the piston head 24 and raising the same. This piston may also be raised any distance desired by properly manipulating the valve 44.

While I have shown and described the preferred form of my invention it is to be understood that I am aware of the fact that the construction, combination and arrangement of parts may be changed by those skilled in the art without departing from the spirit of my invention, as indicated by the appended claims.

I claim:

1. A pneumatic jack comprising an upright cylinder, a pair of telescopic pistons within said cylinder and upwardly movable with respect thereto, said cylinder having its lower end closed and forming a compression head for the outermost piston and the last named piston forming a compression head for the innermost piston, means for normally maintaining each of said pistons in spaced relation with its associated compression head, a tubular stem extending upwardly from the innermost piston carrying a saddle at its free end and communicating with the space beneath said piston at its inner end, a compressed fluid supply pipe, a hose extension between said supply pipe and the upper end of the tubular stem whereby compressed fluid may be admitted beneath the innermost piston, and means whereby compressed fluid may be admitted beneath the outermost piston.

2. A pneumatic jack comprising an upright cylinder, a pair of telescopic pistons within said cylinder and upwardly movable with respect thereto, said cylinder having its lower end closed and forming a compression head for the outermost piston and the last named piston forming a compression head for the innermost piston, means whereby the space existing between each piston head and its associated compression head may be adjusted and thereby to regulate the height of the pneumatic jack, and means whereby compressed fluid may be introduced beneath each of the piston heads for raising the same.

3. A pneumatic jack comprising an upright cylinder, a pair of telescopic pistons within said cylinder and upwardly movable with respect thereto, said cylinder having its lower end closed and forming a compression head for the outermost piston and the last named piston forming a compression head for the innermost piston, set screws carried by each piston head adapted to be used for adjusting the space existing between each piston head and its associated compression head, and means whereby compressed fluid may be admitted beneath each piston for elevating the same.

WILLIAM J. MELCHIOR.