Feb. 3, 1953 M. E. HIEHLE ET AL 2,627,571

CHOKE JOINT HIGH-FREQUENCY HEATER

Filed Nov. 2, 1948

Fig. 1.

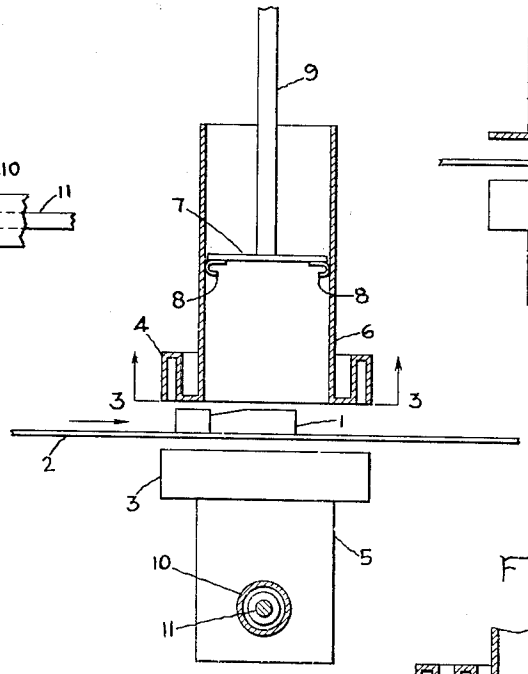

Fig. 2.

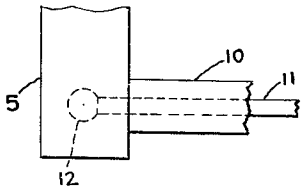

Fig. 4.

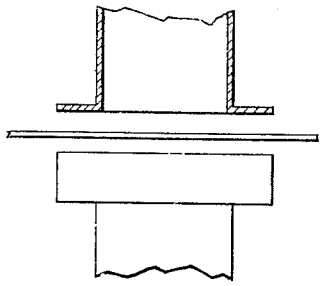

Fig. 6.

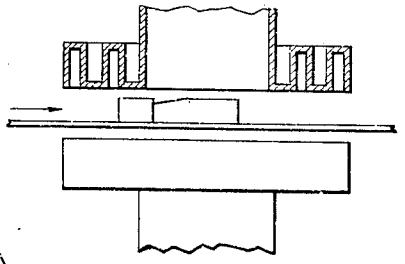

Fig. 3.

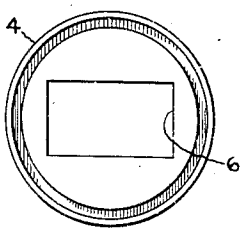

Fig. 5.

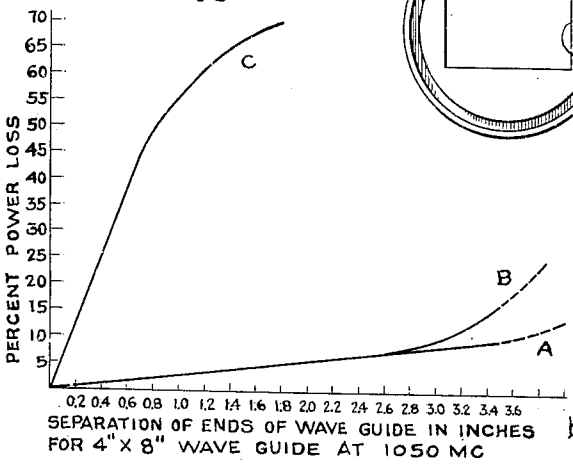

Inventors:
Michael E. Hiehle,
Philip W. Morse,
by Clark H. Mott
Their Attorney.

Patented Feb. 3, 1953

2,627,571

UNITED STATES PATENT OFFICE

2,627,571

CHOKE JOINT HIGH-FREQUENCY HEATER

Michael E. Hiehle, Syracuse, and Philip W. Morse, Elnora, N. Y., assignors to General Electric Company, a corporation of New York

Application November 2, 1948, Serial No. 57,854

2 Claims. (Cl. 219—47)

1

Our invention relates to high frequency heating apparatus and more particularly to heating apparatus utilizing a choke joint in forming the heating chamber. The object of our invention is to provide a simple, reliable and efficient structure suitable for the continuous heating of strip material or material carried on a belt conveyor.

Choke points are well known in the field of wave guide transmission of ultra high frequency energy. For example, they are often used in radar installations in which it is necessary to install a long length of wave guide on a supporting mast which is subject to considerable vibration. In such a case it is often necessary to have various sections of the wave guide entirely separate from each other mechanically. This can be done without substantial loss of high frequency energy by the use of a choke joint at each mechanical separation between sections of the wave guide. The choke joints for such an installation normally consist of two circular flangelike members mounted on adjacent ends of two wave guide sections with the faces of the flanges parallel and separated by a short distance. One flange is straight while the other has a cylindrical groove approximately ¼ wave length deep near the outer edge.

We have found that by replacing the straight flange member with another grooved member, thus forming a double choke joint, and separating the two members sufficiently to allow material to be heated to be passed between them that a high efficiency heating chamber can be produced.

In carrying out our invention in one form we provide a double choke joint having two grooved members mounted in parallel spaced relation with each other on a common vertical axis. Each grooved choke joint member is mounted on a length of rectangular wave guide. The upper length of wave guide has a movable short-circuiting member for adjustment of electromagnetic wave distribution in the heating chamber. High frequency energy is supplied to the lower section of wave guide by means of a concentric conductor. Together, the two lengths of wave guide and the choke joint form a resonant cavity heating chamber. The material to be heated is passed between the two choke joint members on a conveyor belt.

For a more complete understanding of our invention, reference should be had to the accompanying drawing, Fig. 1 of which is a side view, partially in section, looking at the larger transverse dimension of the rectangular wave-guide sections; Fig. 2 is a partial side view of the lower portion of the chamber looking at the smaller

2

transverse dimension of the wave guide; Fig. 3 is a sectional view taken along line 3—3 of Fig. 1; Fig. 4 illustrates one modification of our invention; Fig. 5 is a graph illustrating the comparative losses for double and single choke joints and for no choke joint; and Fig. 6 illustrates another modification of our invention.

In Fig. 1 we have shown our invention as applied to the heating of an object 1 as it is carried by a conveyor belt 2 between two circular grooved choke joint members 3 and 4 having approximately identical dimensions. Lower choke joint member 3 is mounted on a closed section of rectangular wave guide 5 and upper choke joint member 4 is mounted on an open section of rectangular wave guide 6, the transverse dimensions of wave guide 6 being the same as wave guide 5. In wave guide 6 there is provided a variable or movable short-circuiting plug comprising plate 7, flexible fingers 8 and a handle 9.

Choke point members 3 and 4, wave guides 5 and 6, plate 7 and flexible fingers 8 are all composed of an electrically conductive material, preferably copper. When these parts are assembled as shown in Fig. 1 on a common axis with the sides of wave guide sections 5 and 6 coplanar, with the faces of choke joint members 3 and 4 parallel and spaced a distance of not greater than one quarter wave length apart, a resonant cavity is formed providing all dimensions are properly chosen with respect to the frequency of the high frequency energy to be employed.

Energy is supplied to the heating chamber by an ultra high frequency generator (not shown) through a concentric conductor comprising an outer conductor 10 and an inner conductor 11. The outer conductor 10 of the concentric conductor is securely fastened to one side of lower wave guide 5 while inner conductor 11 terminates in adjustable probe 12 (best seen in Fig. 2) inside wave guide 5. The concentric conductor is positioned on wave guide 5 at a point of suitable impedance match. Standing electromagnetic waves are produced in the resonant cavity heating chamber formed by the two wave guide sections and the choke joint resonator and their appurtenances. In this manner, relatively high intensity electromagnetic fields are established in the space between the two choke joint members and objects located in or passing through that space are heated thereby.

Our invention provides a very flexible method of heating because of the easy accessibility to high electromagnetic fields, and a great variety of materials with considerable variation in size

and shape may be heated. Variations in size, shape and composition of the material being heated all affect the electromagnetic field distribution in the heating chamber, but these variations can be compensated for, at least in part, by adjusting the variable short-circuiting plug in wave guide 6 and by adjusting the amount which probe 12 extends into wave guide 5. If further compensation is required, conventional means (not shown) of matching the system to the generator can be utilized, such as orifice tuning, a triple stub tuner, or quarter wave sleeves in one or both of wave guide sections 5 and 6, or a variable short-circuiting stub along the concentric transmission line from the generator to the heating chamber. Furthermore, by using one or more of the adjustments mentioned, our invention can be used to heat materials which require either a high intensity electric field or a high intensity magnetic field. It is well known that for best heating some materials require one and some the other of these types of fields. It is also well known that in an electromagnetic field the point of maximum electric field intensity coincides with the point of minimum magnetic field intensity, and vice versa.

While in the first three figures of the drawing we have illustrated a heater utilizing two grooved choke joint members, when the material to be heated requires a comparatively small heating space a single grooved choke joint member can be used. In such a case the opposing wave gutide section has a straight circular flange mounted on the adjacent end in a manner similar to a conventional choke joint. The straight flange is approximately the same diameter as the outside diameter of the grooved choke joint member, with the face of the opposing straight flange parallel to the face of the grooved choke joint member, as illustrated in Fig. 4 on the accompanying drawing.

The approximate percentage power loss for various distances of separation between wave guide sections, utilizing 1050 megacycles per sec. as the frequency of the heating energy is shown in Fig. 5. Curve A applies when a double choke joint is used, this being the arrangement illustrated by Fig. 1. Curve B applies when one grooved choke joint member and a straight flange are used, as illustrated by Fig. 4. Curve C shows the losses that would be encountered if no choke joint were used. From these curves it can be seen that the losses are approximately the same for double or single choke joints up to a spacing of approximately 2.6''. As the spacing increases beyond this amount the losses of a single choke joint heater increase much more rapidly than those of a double choke joint heater.

While we have shown one preferred embodiment of our invention and have mentioned one modification—namely, the use of a single grooved choke joint member with an opposing straight flange, many other modifications will occur to those skilled in the art. For example, it can readily be seen that our invention may be applied to the heating of material in the form of strip or wire instead of an object carried on a conveyor belt; such an application is illustrated in Fig. 4 of the accompanying drawing. Another example is to increase the efficiency of the heater by utilizing a multiple choke joint in which each member has a plurality of properly spaced concentric quarter wave length cylindrical grooves instead of a single groove, as illustrated in Fig. 6 of the accompanying drawing. It should be understood that we intend to cover by the appended claims any such modifications as fall within the true spirit and scope of our invention; the claims refer to choke joints and wave guides, but we intend to cover by these terms equivalent structures which are employed in the same manner, regardless of the appellations which may be applied to them.

What we claim as new and desire to secure by Letters Patent of the United States is:

1. A high frequency heating apparatus comprising a heating chamber with walls of electrically conductive material, said chamber comprising a wave guide closed at the ends to form a resonant cavity, a choke joint comprising a pair of flatly disposed members spaced apart in substantially parallel relation positioned in said wave guide and providing a transverse gap therein, means for introducing high frequency electromagnetic energy into said heating chamber and establishing therein an electromagnetic field having high intensity in the said gap between the two choke joint members, means for adjusting the electromagnetic field pattern in said heating chamber, and means for passing the material to be heated through said heating chamber by passing it between the two members forming the choke joint.

2. A high frequency heating apparatus coming a wave guide choke joint composed of two spaced members, said two members being separated sufficiently to allow the material to be heated to be passed between them but not greater than one quarter wave length, said choke joint being mounted as an integral part of a heating chamber of electrically conductive material formed by a wave guide with both ends closed, means for introducing high frequency electromagnetic energy into said heating chamber, means for adjusting the electromagnetic wave distribution in said heating chamber to provide a relatively high intensity electromagnetic field between the said two choke joint members, and means for passing the material to be heated through said heating chamber by passing it between the said two members.

MICHAEL E. HIEHLE.
PHILIP W. MORSE.

REFERENCES CITED

The following references are of record in the file of this patent:

UNITED STATES PATENTS

Number	Name	Date
2,364,526	Hansell	Dec. 5, 1944
2,400,777	Okress	May 21, 1946
2,407,313	Mieher et al.	Sept. 10, 1946
2,407,690	Southworth	Sept. 17, 1946
2,451,876	Salisbury	Oct. 19, 1948
2,473,724	Okress et al.	June 21, 1949
2,500,676	Hall et al.	Mar. 14, 1950
2,500,752	Hanson et al.	Mar. 14, 1950
2,561,130	McClellan	July 17, 1951

OTHER REFERENCES

Radar Electronic Fundamentals, June 1, 1944, Bureau of Ships, Navy Dept., Washington, 25, D. C.