Office de la Propriété Intellectuelle du Canada
Un organisme d'Industrie Canada

Canadian Intellectual Property Office
An agency of Industry Canada

CA 2802875 C 2016/11/29

(11)(21) 2 802 875

(12) BREVET CANADIEN
CANADIAN PATENT

(13) C

(22) Date de dépôt/Filing Date: 2013/01/18

(41) Mise à la disp. pub./Open to Public Insp.: 2014/07/18

(45) Date de délivrance/Issue Date: 2016/11/29

(51) Cl.Int./Int.Cl. *B63C 11/52* (2006.01), *B63B 21/66* (2006.01), *B63B 27/36* (2006.01), *B66C 1/66* (2006.01)

(72) Inventeur/Inventor:
MILLS, REUBEN A, CA

(73) Propriétaire/Owner:
CANADIAN SCIENTIFIC SUBMERSIBLE FACILITY, CA

(74) Agent: THOMPSON COOPER LLP

(54) Titre : PROCEDE ET APPAREIL DE COUPLAGE SOUS-MARIN
(54) Title: METHOD AND APPARATUS FOR UNDERWATER COUPLING

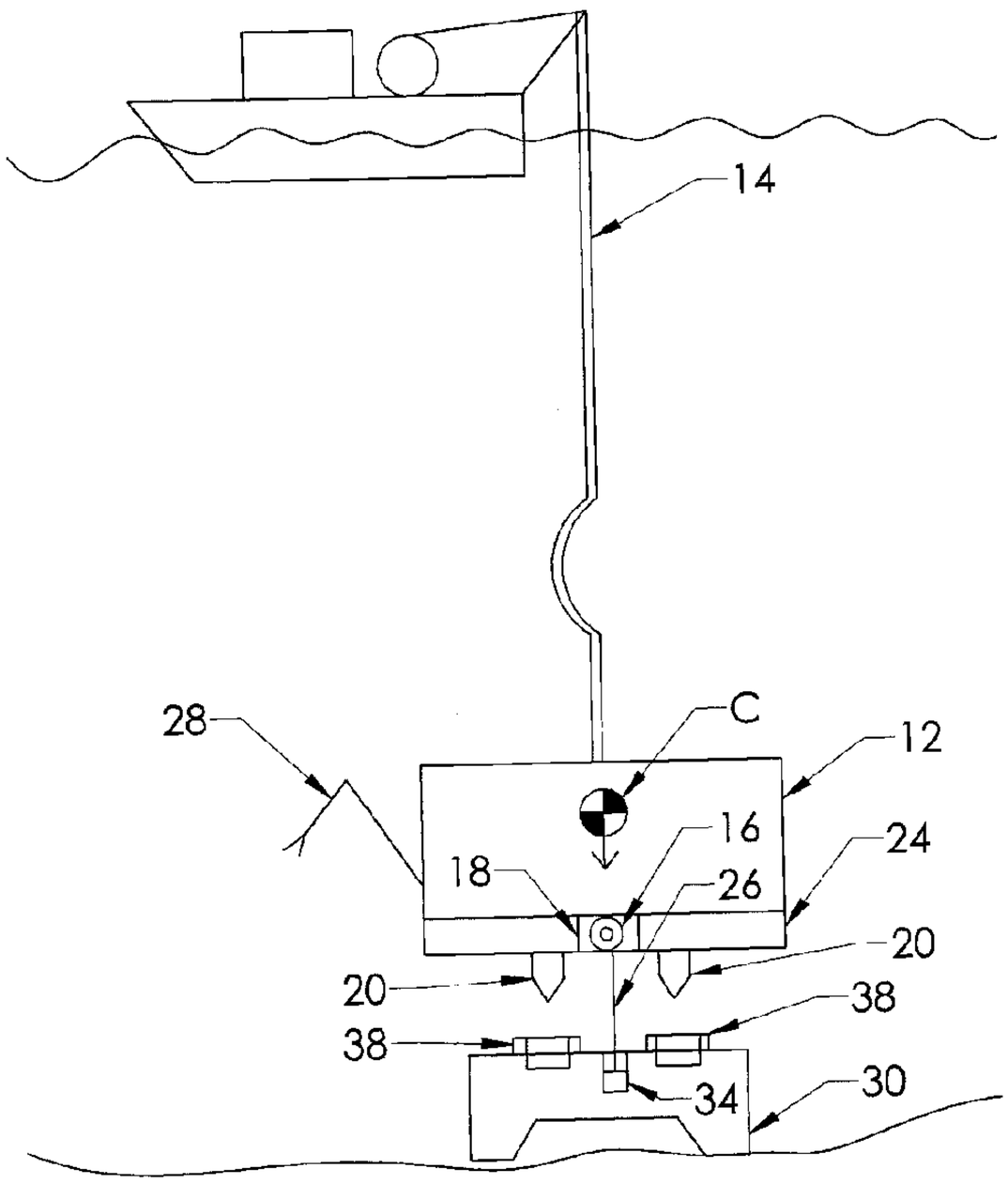

(57) Abrégé/Abstract:
A method and apparatus for underwater coupling of an underwater craft and an underwater package. The underwater craft has a centre of mass with a winch positioned in a winch pocket directly below the centre of mass. A first underwater coupling assembly is provided having two or more first coupling components positioned symmetrically around the winch pocket. The underwater package has a centre of mass with a lift line receiver positioned in a receiver pocket directly above the centre of mass. A second underwater coupling assembly is provided having two or more second coupling components positioned symmetrically around the receiver pocket. A lift line is lowered and engages the lift line receiver. The winch is activated to draw the underwater craft down onto the underwater package and bring the coupling components into coupling engagement.

ABSTRACT OF THE DISCLOSURE

A method and apparatus for underwater coupling of an underwater craft and an underwater package. The underwater craft has a centre of mass with a winch positioned in a winch pocket directly below the centre of mass. A first underwater coupling assembly is provided having two or more first coupling components positioned symmetrically around the winch pocket. The underwater package has a centre of mass with a lift line receiver positioned in a receiver pocket directly above the centre of mass. A second underwater coupling assembly is provided having two or more second coupling components positioned symmetrically around the receiver pocket. A lift line is lowered and engages the lift line receiver. The winch is activated to draw the underwater craft down onto the underwater package and bring the coupling components into coupling engagement.

TITLE

[0001] Method and Apparatus for Underwater Coupling

FIELD

[0002] There is described a method and apparatus for underwater coupling intended to be used by an underwater craft connected by an umbilical connection to a surface vessel floating on a surface of an ocean.

BACKGROUND

[0003] The method of underwater coupling that will hereinafter be described is applicable to an underwater craft that is connected by an umbilical connection to a surface vessel that floats on a surface of an ocean. A number of difficulties are encountered when an underwater craft attempts an underwater coupling with a package on a seabed. One difficulty is movement communicated through the umbilical connection as the surface vessel rises and falls with the heaving of the ocean. Another difficulty is aligning a first coupling assembly on the underwater craft with a second coupling assembly on the package to complete the underwater coupling. There will hereinafter be described a method and apparatus that was developed for the purpose of making an underwater coupling under such demanding conditions.

SUMMARY

[0004] According to one aspect there is provided an apparatus for underwater coupling, which consists of a combination of an underwater craft and an underwater package. The underwater craft is one that operates through an umbilical connection to a surface vessel floating on a surface of an ocean. The underwater craft has a centre of mass with a winch positioned in a winch pocket directly below the centre of mass. A first underwater coupling assembly is provided having two or more first coupling components positioned symmetrically around the winch pocket. The underwater package has a centre of mass with a lift line receiver positioned in a receiver pocket directly above the centre of mass. A second underwater coupling assembly is provided having two or more second coupling components positioned symmetrically around the receiver pocket.

[0005] According to another aspect there is a method of underwater coupling using the underwater craft and the underwater package described above. A first step involves lowering a lift line from the winch of the underwater craft and engaging the lift line receiver of the underwater package. A second step involves activating the winch to bring the first coupling components of the first underwater coupling assembly of the underwater craft into coupling engagement with the second coupling components of the second underwater coupling assembly of the underwater package.

[0006] There are two ways in which underwater coupling may occur. One way is for the underwater craft to be drawn down by the winch onto the underwater package. Another way is for the underwater package to be drawn up by the winch to the underwater craft for a mid-water coupling.

BRIEF DESCRIPTION OF THE DRAWINGS

[0007] These and other features will become more apparent from the following description in which reference is made to the appended drawings, the drawings are for the purpose of illustration only and are not intended to be in any way limiting, wherein:

[0008] **FIG. 1** is a bottom perspective view of an underwater craft.

[0009] **FIG. 2** is a a top perspective view of an underwater package.

[0010] **FIG. 3** is a side elevation view of the underwater craft of **FIG. 1** docking on the underwater package of **FIG. 2**.

[0011] **FIG. 4** is a perspective view of the underwater craft of **FIG. 1** righting the underwater package of **FIG. 2**.

[0012] **FIG. 5** is a perspective view of the underwater craft of **FIG. 1** performing a mid-water docking with the underwater package of **FIG. 2**.

DETAILED DESCRIPTION

[0013] A combination apparatus will now be described with reference to **FIG. 1** through **5**.

Structure and Relationship of Parts:

[0014] Referring to **FIG 1,** an underwater craft 12 is illustrated which operates through an umbilical connection 14 to a surface vessel floating on a surface of an ocean (not shown). Underwater craft has a centre of mass generally identified by arrow C. A winch 16 is positioned in a winch pocket 18 directly below centre of mass C. A first underwater coupling assembly, generally indicated by arrow 20, is provided having two or more first coupling components 22 positioned symmetrically around winch pocket 18. Winch 16 is positioned within winch pocket 18 so that winch 16 does not impinge or otherwise interfere with the functioning of first underwater coupling assembly 20. The "belly winch" system described above is preferrably incorporated into tool skid 24 that forms part of a Remotely Operated Cable Laying System (ROCLS). Winch 16 extends and retracts a lift line 26. Underwater craft 12 has manipulators 28 that are used to grasp and manipulate undersea objects.

[0015] Referring to **FIG. 2,** an underwater package 30 is illustrated having a centre of mass generally identified by arrow C. A lift line receiver 32 is positioned in a receiver pocket 34 directly above centre of mass C. A second underwater coupling assembly generally indicated by arrow 36, is provided having two or more second coupling components 38 positioned symmetrically around receiver pocket 34.

Operation:

[0016] The belly winch system allows the operator to connect a lift line to underwater package 30 and either lift undewater package 30 off the seafloor or pull underwater craft 12 down to underwater package 30. It will be appreciated that underwater package 30 equipment can include ROCLS drum frames, Instrument platforms and other large and heavy packages. Specifically, the winch system allows the operator to hoist or lower other packages under

underwater craft 12.

[0017] The purposes are:

- to right a tipped over underwater package 30, as shown in **FIG. 4**,
- to pull underwater craft 12 down to underwater package 30 resting on the seafloor at an angle, thus allowing it to latch, as shown in **FIG. 3**
- to pull underwater package 30 off the seafloor and bring it up to underwater craft 12 for mid-water latching, as shown in **FIG. 5**
- to unlatch and lower package 30 from the underwater craft to the seafloor

[0018] The fact that winch 16 is located on the ROCLS tool skid directly below center of mass C of underwater craft 12 allows the operator to lower and raise underwater package 30 without affecting the pitch or roll of the vehicle. Winch 16 is fitted with enough lift line 26 to allow the operator to grip the ROCLS lift interface at the end of lift line 26 with either of manipulators 28 of underwater craft 12 and not restrict the reach of manipulators 28 in any direction while making a connection to underwater package 30. Lift line 26 is equipped with a low profile connector that allows winch 16 to pull underwater package 30 snug up to first underwater coupling assembly 20. It is preferred that winch 16 is situated on tool skid 24 to allow undersea package 30 to be hoisted enough that a coupling can be made between first underwater coupling assembly 20 and second underwater coupling assembly 36. The coupling components used are, preferably, hydraulically operated latches. The lift interface is designed to not interfere with underwater package 30 and tool skid 24 of underwater craft 12 when the two are in close proximity to each other.

Operational Example 1 – Coupling when conditions are not ideal

[0019] Referring to **FIG. 3,** as stated in the Background undersea coupling can be difficult due to movement communicated through the umbilical connection as the surface vessel rises and falls with the heaving of the ocean. There can also be alignment problems in trying to align first

underwater coupling assembly 20 on underwater craft 12 with second underwater coupling assembly 36 on underwater package 30 to complete the underwater coupling. When this occurs, a first step is taken of lowering a lift line 26 from winch 16 of underwater craft 12 and engaging lift line receiver 32 of underwater package 30. A second step is then taken of activating winch 16 to draw underwater craft 12 down onto underwater package 30 and bring first coupling components 22 of first underwater coupling assembly 20 of underwater craft 12 into coupling engagement with second coupling components 38 of second underwater coupling assembly 36 of underwater package 30.

Operational Example 2 - Remotely deployed ROCLS frame tipped over

[0020] Referring to **FIG. 4,** in many instances, underwater package 30 is lowered to the seafloor by the ship's winch via a separate cargo line and remotely released via acoustic release. In this particular example, underwater package 30 is either not level or has fallen over and the operator must have a method to right underwater package 30. In this situation, the operator would spool out enough lift line 26 from belly winch 16 to pick up lift line 26 with one of manipulotors 28 for underwater craft 12. Lift line 26 would then be attached to lift line receiver 32 on top of underwater package 30 and umbilical connection 14 hoisted until both underwater craft 12 and underwater package 30 were safely off the seafloor. Underwater package 30 could then be either placed back on the seafloor in a vertical orientation or hoisted up all the way to allow the hydraulic latches to mate.

Major Benefits

[0021] Without the belly winch the operator is far too reliant on everything being perfect. To date the belly winch has been called on to work in exactly the way it was designed and has made what could be a major problem, a standard operation of little consequence.

[0022] In this patent document, the word "comprising" is used in its non-limiting sense to mean that items following the word are included, but items not specifically mentioned are not

excluded. A reference to an element by the indefinite article "a" does not exclude the possibility that more than one of the element is present, unless the context clearly requires that there be one and only one of the elements.

[0023] The scope of the claims should not be limited by the illustrated embodiments set forth as examples, but should be given the broadest interpretation consistent with a purposive construction of the claims in view of the description as a whole.

What is Claimed is:

1. A method for underwater coupling, comprising:

providing an underwater craft which operates through an umbilical connection to a surface vessel floating on a surface of an ocean, the underwater craft having a centre of mass with a winch positioned in a winch pocket directly below the centre of mass and a first underwater coupling assembly having two or more first coupling components positioned symmetrically around the winch pocket;

providing an underwater package having a centre of mass with a lift line receiver positioned in a receiver pocket directly above the centre of mass and a second underwater coupling assembly having two or more second coupling components positioned symmetrically around the receiver pocket;

lowering a lift line from the winch of the underwater craft and engaging the lift line receiver of the underwater package; and

activating the winch to bring the first coupling components of the first underwater coupling assembly of the underwater craft into coupling engagement with the second coupling components of the second underwater coupling assembly of the underwater package.

2. The method of Claim 1, wherein the underwater craft is drawn down by the winch onto the underwater package for seabed coupling.

3. The method of Claim 1, wherein the underwater package is drawn up by the winch to the underwater craft for mid-water coupling.

4. An apparatus for underwater coupling, comprising:

an underwater craft which operates through an umbilical connection to a surface vessel floating on a surface of an ocean, the underwater craft having a centre of mass with a winch positioned in a winch pocket directly below the centre of mass and a first underwater coupling assembly having two or more first coupling components positioned symmetrically around the winch pocket; and

an underwater package having a centre of mass with a lift line receiver positioned in a receiver pocket directly above the centre of mass and a second underwater coupling assembly having two or more second coupling components positioned symmetrically around the receiver pocket.

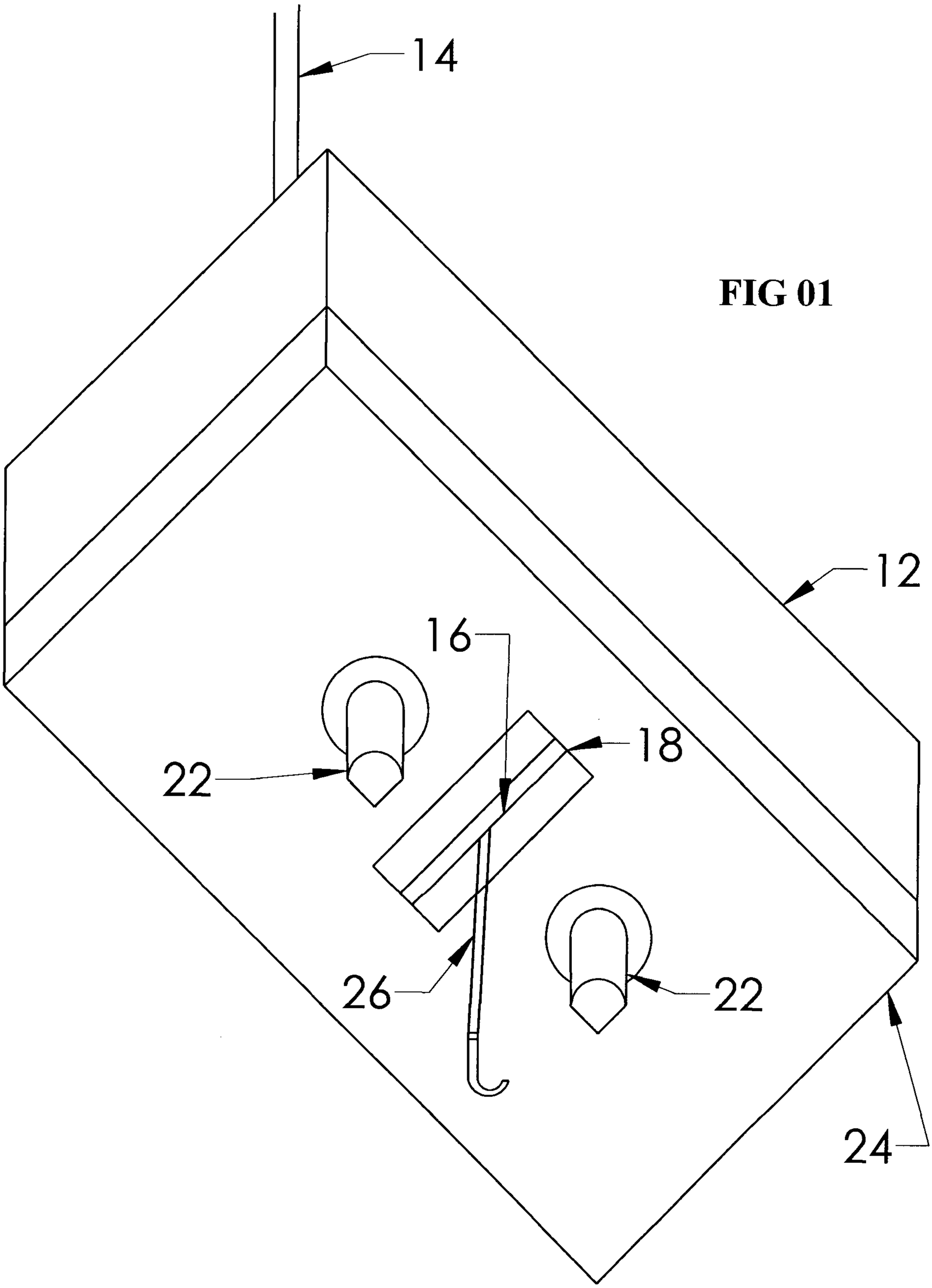

FIG 01

FIG 02

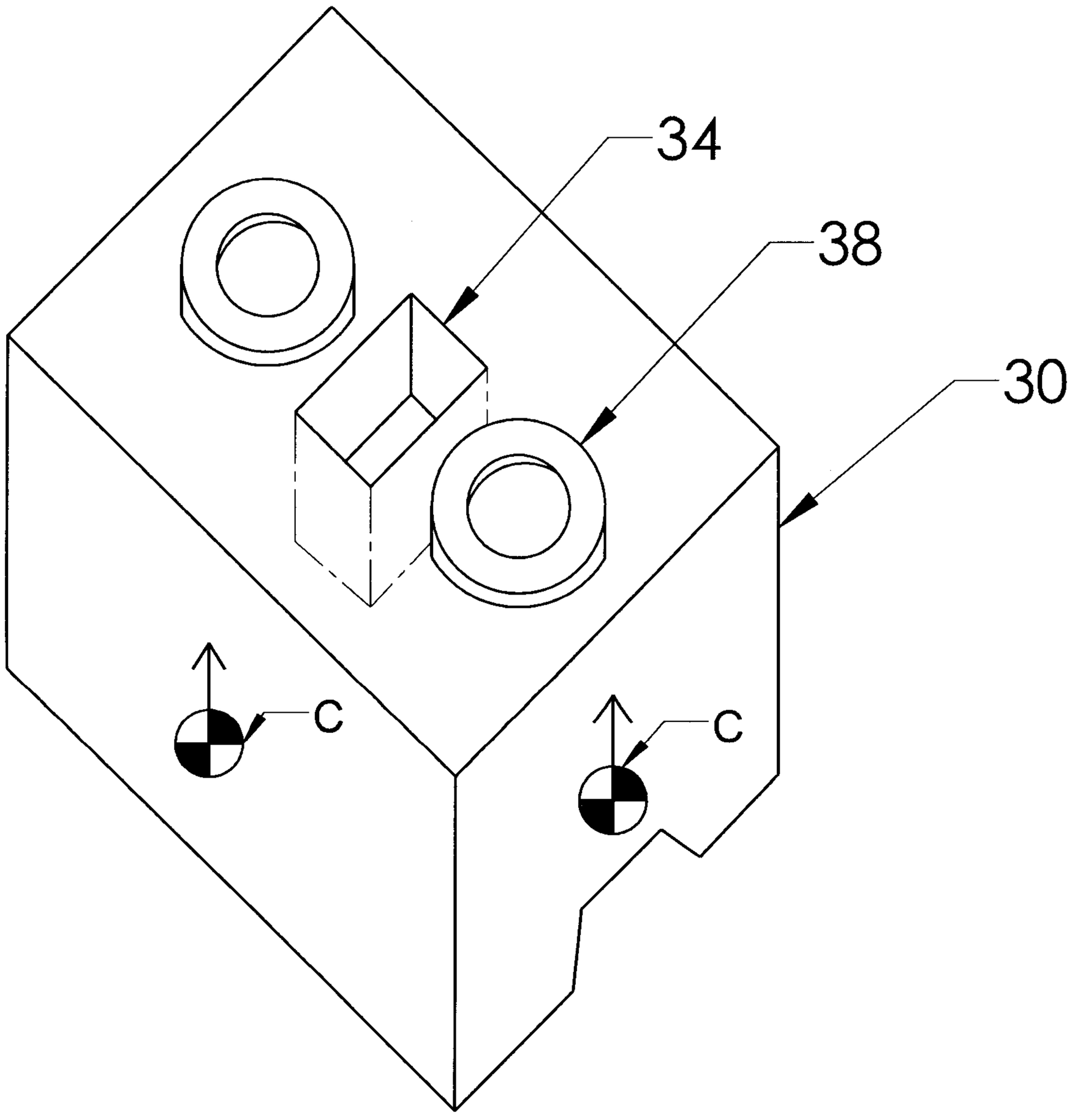

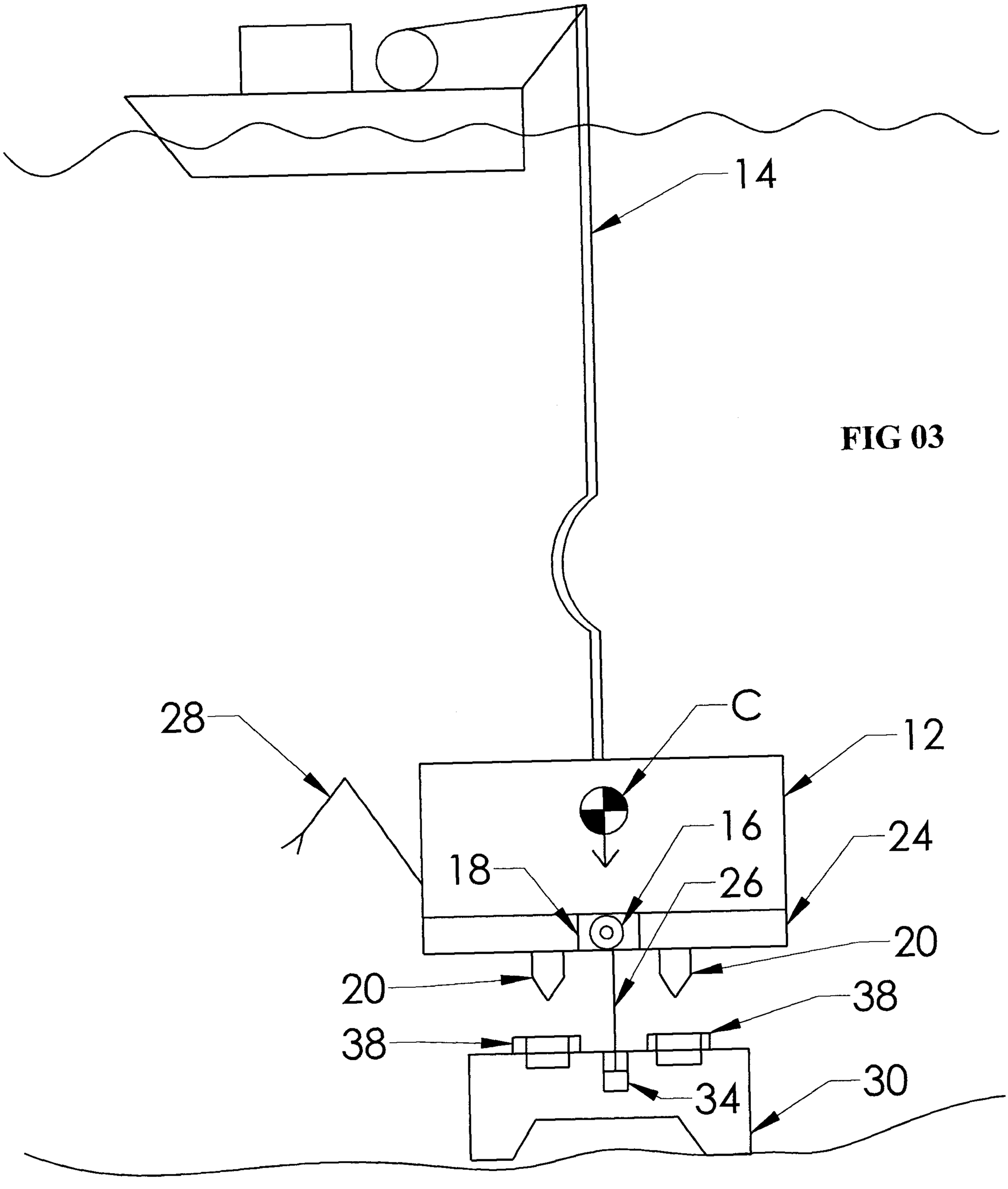

FIG 03

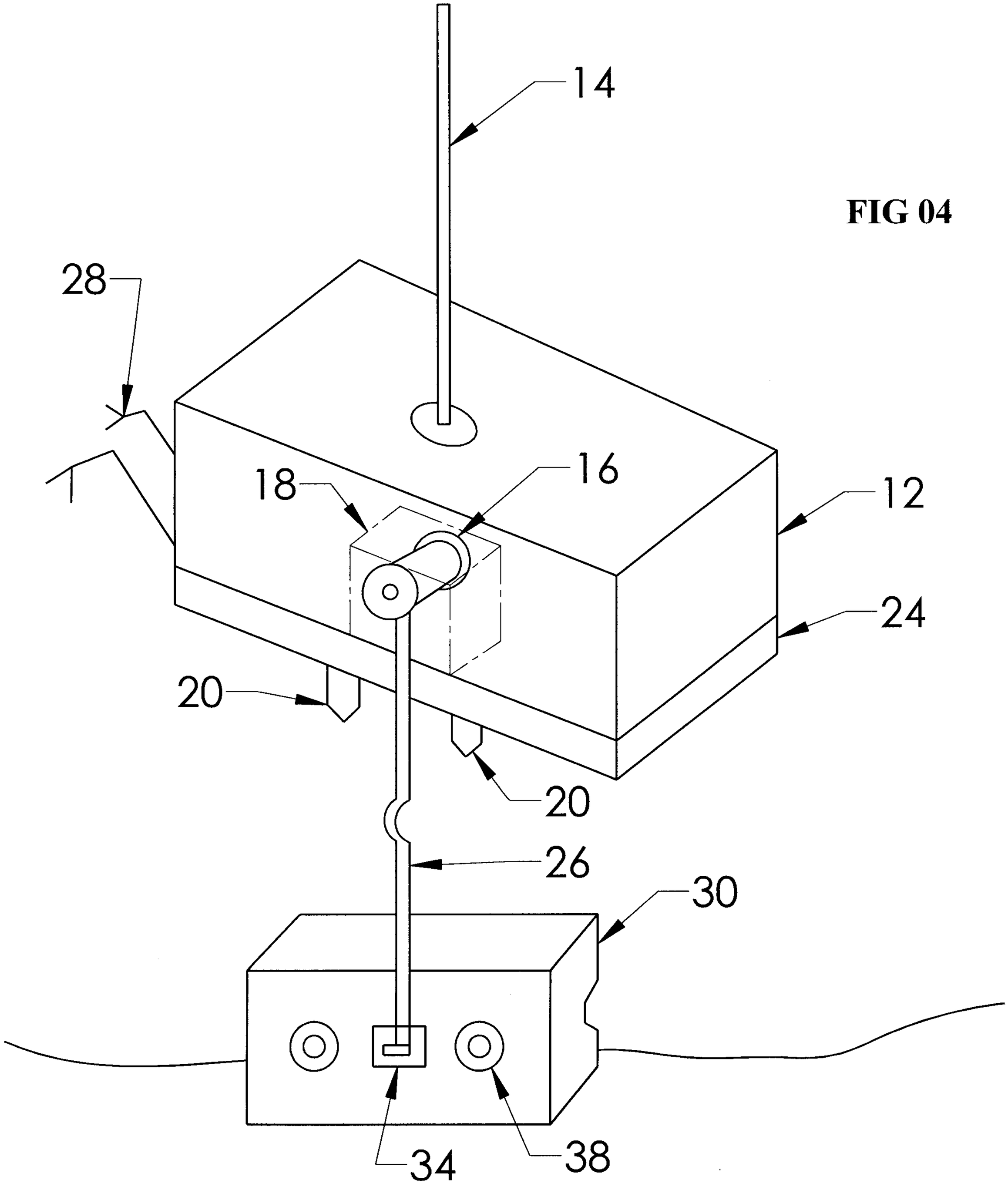

FIG 04

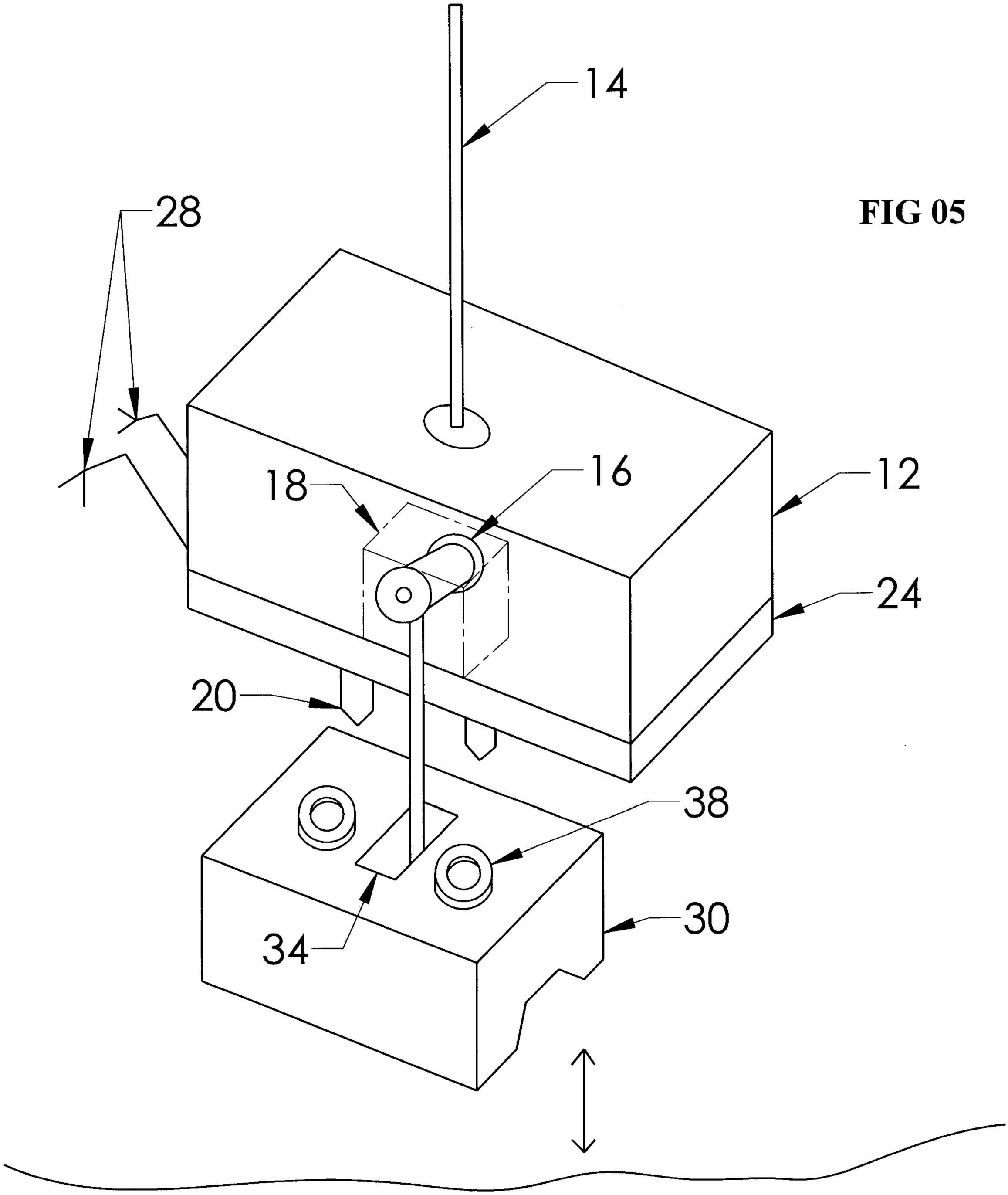

FIG 05

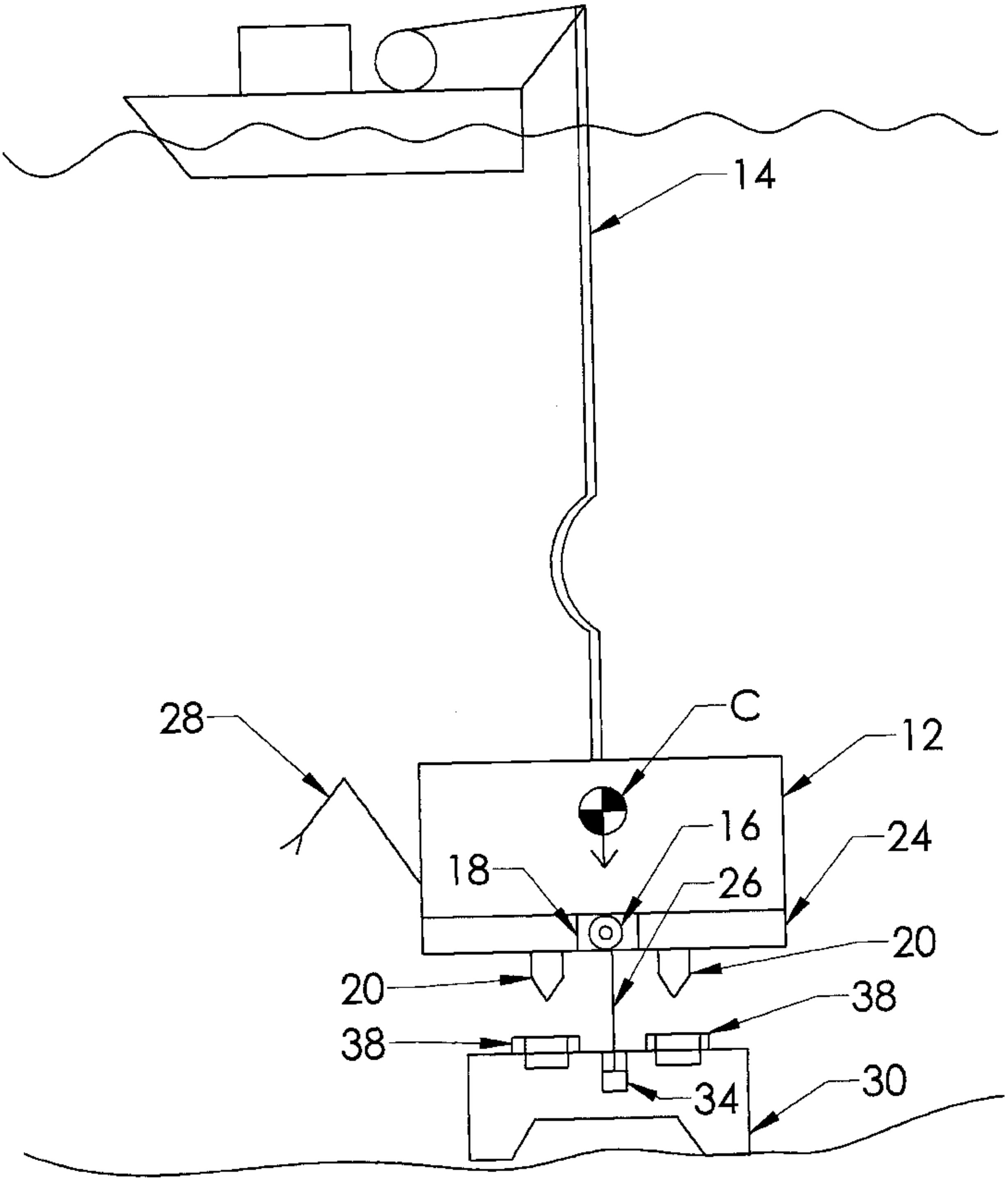
14
28
C
12
16
24
18
26
20
20
38
38
34
30